GENERAL DESCRIPTION

The OT-0711 package will free run and load test starters; included in this tester is an oscilloscope, D.C. power supply and tachometer circuit.

This tester is equipped with a pneumatic vise to facilitate the testing of starters. Three digital meters display power supply voltage, starter load amps, solenoid amps, and R.P.M. Two built in shelves hold unused plates and a third shelve is for accessories. A preset load reduces the time required to test the starters.

AIR REQUIREMENT

Connect house air (150 psi maximum) to the 1/4 N.P.T. pipe at the rear of the tester. Adjust the regulator to approximately 40 psi.

ELECTRICAL REQUIREMENT

220 volt (208-250) A.C. single phase at 20 amps is required to operate this tester. Connection to the local disconnect box at the rear of the tester should be made by a qualified electrician according to local electrical codes.

MECHANICAL SET UP

Two different drive gears are supplied with this tester; the OT-1093 Chrysler (28 teeth), the OT-1094 Ford-Delco (32 teeth). The drive gear is held in position by a locking ring accessible through the front of the tester when the mounting plate is off. To remove the gear use snap ring pliers to spread and remove the snap ring, install the required gear.

Electrical Rebuilder's ERA FOUNDED 2001 ASSOCIATION

MECHANICAL SET UP (Cont.)

On the base plate in front of the drive gear are eight large holes and four small holes ones which are used to locate the pneumatic vise in various positions. The left hand row of hole sets are used for Chrysler starters and the other are used for Ford or Delco starters. When preparing to test a starter align the pneumatic vise to hold the starter into the tester so that it can be easily removed when the air pressure is released.

Select the correct mounting plate (each plate is stamped with a number) using the tooling plate chart. Slide the plate into the brackets with the positioning pin facing outward. Place the starter up against the mounting plate so that one of its nose housing bolt holes align with the positioning pin; close the air vise - CAUTION: Be sure to keep your fingers clear of the vise clamp.

Be sure the starter is correctly engaged; you can determine this by listening to the gear noise when running the starter. When adjustment of the alignment is required (due to differences in housings) release the pneumatic vise first. The locking nuts are then loosened and the centering nuts adjusted (one on each side and two on bottom of mounting brackets) until the starter drive meshes properly - retighten the locking nuts.

ELECTRICAL CONNECTIONS

Connect the heavy red clamp to the starter battery terminal, connect the solenoid lead and "R" lead to the solenoid - as applicable. If the solenoid lead is not used, like on Ford starters, be sure it does not touch ground as it has voltage applied to it during the tests and the panel fuse will blow out if the lead touches ground. (Unplug it from the front panel).

Electrical Rebuilder's ERA FOUNDED 2001 ASSOCIATION

FREE RUN TEST

1. Set load control to free run (clockwise position).

2. Put ammeter switer in solenoid position.

3. Press cycle switch, observe solenoid reading, switch ammeter to starter position.

4. Observe "R" light (on Delco starters).

5. Observe oscilloscope pattern for definition of problem areas.

6. Release cycle switch, observe meter readings. These readings will be displayed until the cycle switch is pressed again or until the tester is turned off.

LOAD TEST

1. Same as above, except that the load control is moved into the load position prior to step #5. This simulates car load conditions.

   NOTE: The starter should be run for 1 to 5 seconds or until the readings stabilize.

   NOTE: To develop a standard of acceptance, average the amp readings to 10 good starters and allow plus or minus 15 percent for limits.

MAINTENANCE

Lubricate pillow block assemblies	Weekly
Check oil level in reservoir tank	Monthly

Remove vent cap, dip screw driver into tank - oil should be 2-2½ inches from the top (DO NOT OVER FILL - OIL NEEDS ROOM TO EXPAND WHEN HOT). If oil is dirty or sludge has formed, clean system and replace with 10/30 oil.

Oil fan motors.	Annually
Remove side panels to blow dirt from tester	As required
Empty water from air regulator.	As required
Check oil in air-oiler, fill ½ way with Marvel lubricating oil.	As required

Electrical Rebuilder's ERA FOUNDED 2001 ASSOCIATION

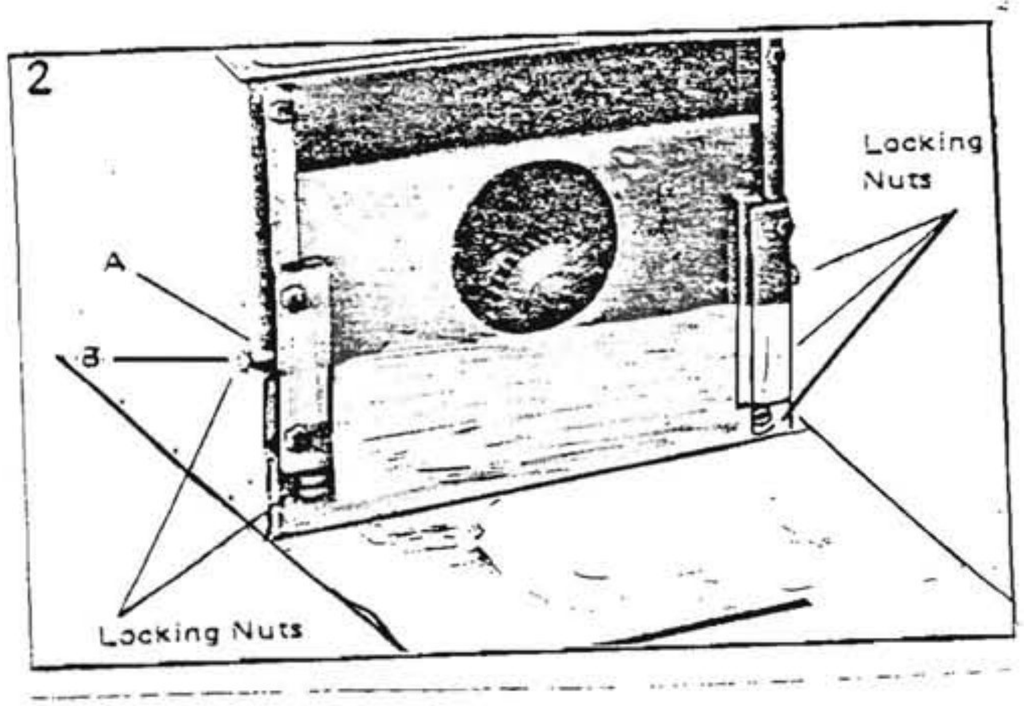

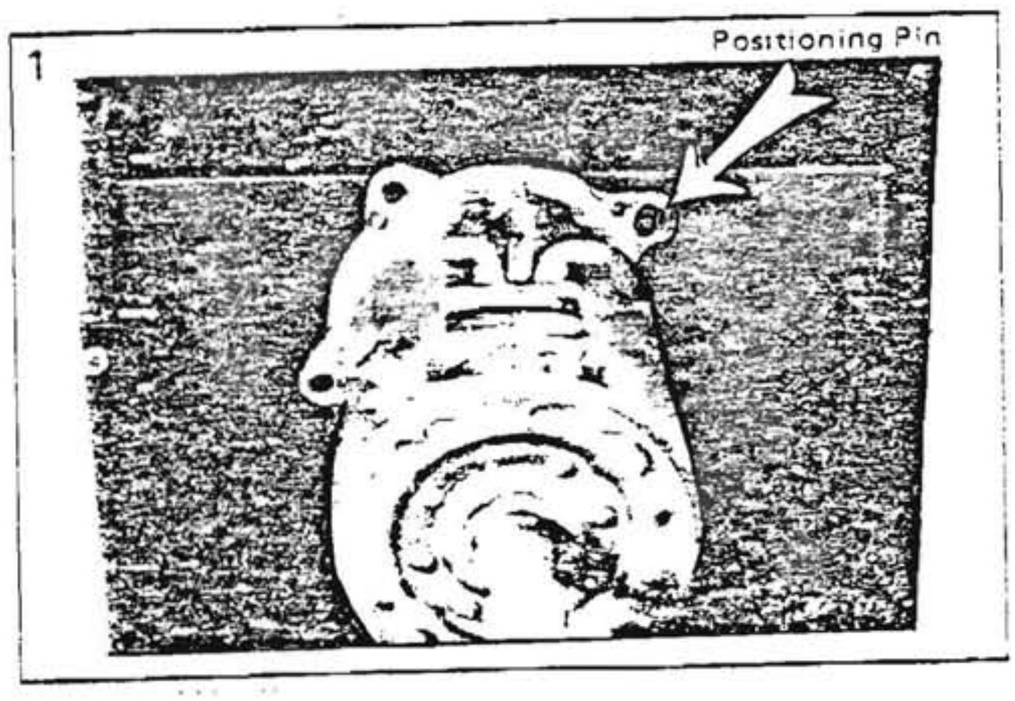

TYPICAL CONNECTIONS

DELCO



FORD



FORD WITH DELCO SOLENOID

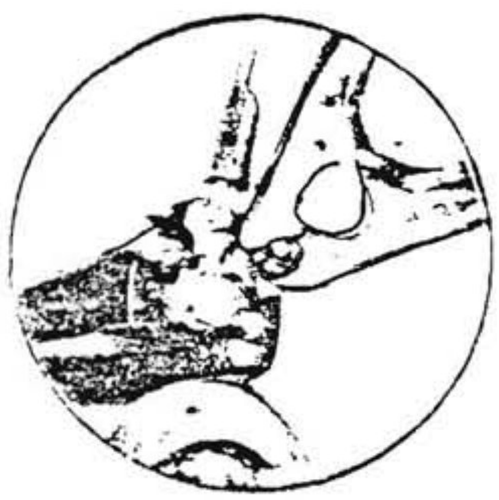

CHRYSLER



Electrical Rebuilder's ERA FOUNDED 2001 ASSOCIATION

PART LISTING

(Electrical)

Symbol	Description	Part Number
R3	Shunt - Solenoid 100 A, 100 mu	AT-0277
R2	Shunt - Starter Amps 500 A, 50 mu	AT-0515
CR3-6	Diode - High current power supply	CT-5124
T1 & T2	Transformer - High current power supply	DT-0001
T3	Transformer - Step down	DT-0026
T4	Transformer - Printed circuit power supply	DT-1008
B1 & B2	Fan - 220 volt	DT-1291
K1	Solenoid - High current	GT-1005
K2	Relay - Hold circuit	GT-1023
S3	Switch - Ammeter	GT-1068
DS1 & DS2	Bulb - 1891	HT-1014
	Fuse Holder - 3 AG fuses	JT-0004
F3 & 4	Fuse - For local disconnect box	JT-0032
F2	Fuse - Solenoid, 20 Amp	JT-0041
F1	Fuse - Meters & Electronics, 0.5 Amp	JT-1000
PCB1	Printed Circuit Board - For scope	TT-1133
PCB2	Printed Circuit Board - Tachometer	TT-5139
	Test Lead - Scope, red	VT-0034
	Test Lead - Scope, black	VT-0035
	Test Lead - Solenoid	VT-0127
	Test Lead - "R" terminal	VT-0081
S2	Cycle Switch - To test units	XT-2051

Electrical Rebuilder's ERA FOUNDED 2001 ASSOCIATION

1/30/81
L.G.

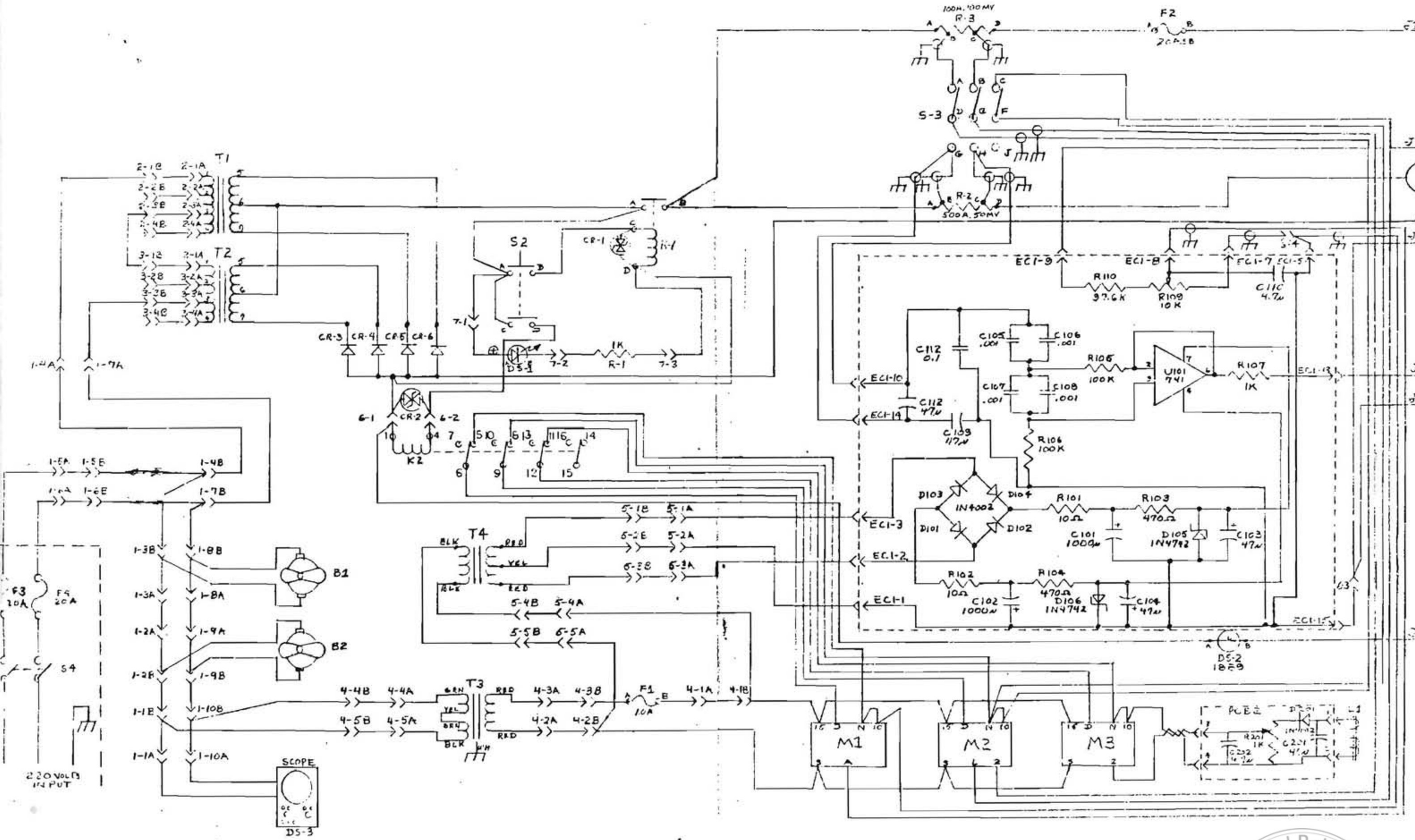

Electrical Rebuilder's ERA FOUNDED 2001 ASSOCIATION

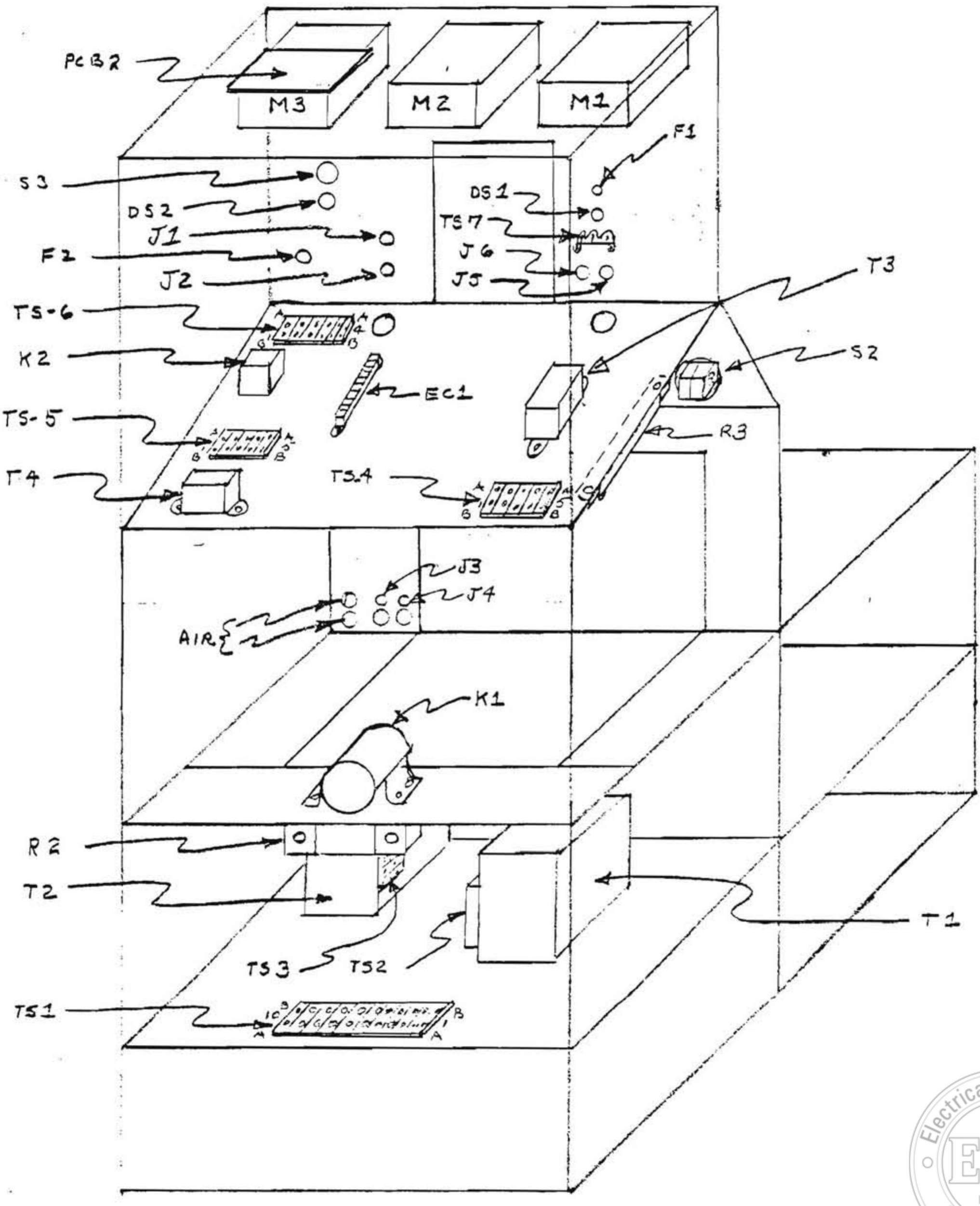

Electrical Rebuilder's ERA FOUNDED 2001 ASSOCIATION

OT-0711 TESTER PARTS (1)

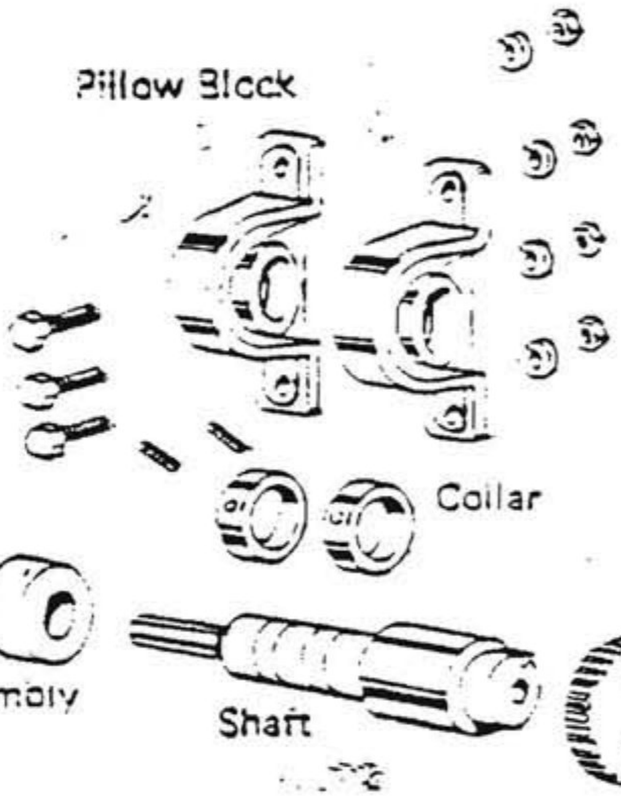

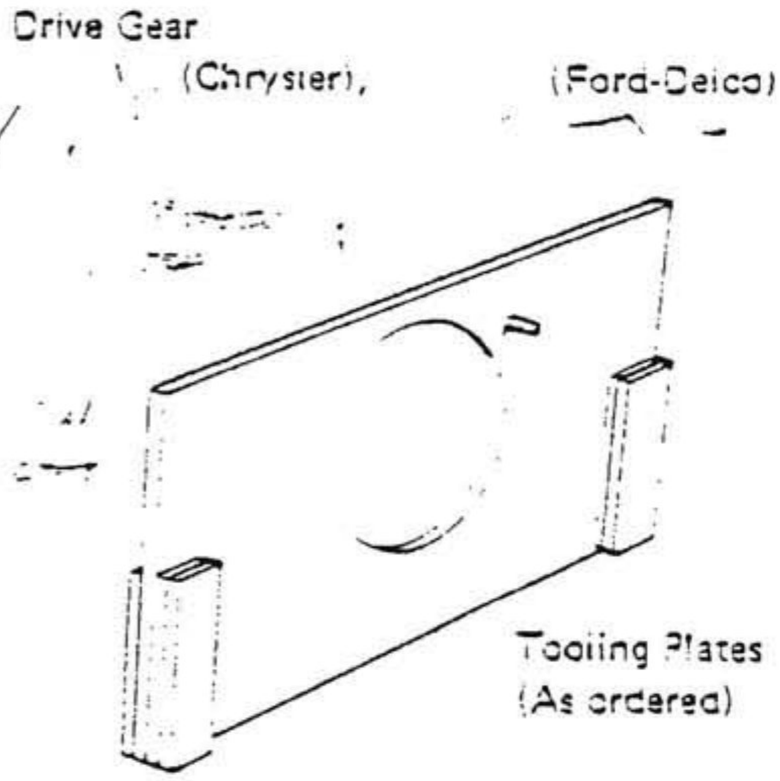

Electrical Rebuilder's ERA FOUNDED 2001 ASSOCIATION

PART LISTING

(Mechanical)

Symbol	Description	Part Number
	Air Regulator - with oiler	MT-1501
	Air Cylinder - Tensioner	MT-2518
	Air Valve - Load	MT-2520
	Pump - Oil	MT-2140
	Gauge - 0-2000 psi	MT-0057
	Relief Valve - Load pre-set	MT-5137
	Shaft - For gears	QT-1092

Electrical Rebuilder's ERA FOUNDED 2001 ASSOCIATION

VENSEL ENTERPRISES

RICHARD & BARBARA
VENSEL

(815) 459·0355
(800) 662·6099

3710 RIVERSIDE DRIVE
CRYSTAL LAKE, ILLINOIS
60014 USA
FAX (815) 459·0442

NEW AND USED
AUTOMOTIVE & INDUSTRIAL
EQUIPMENT

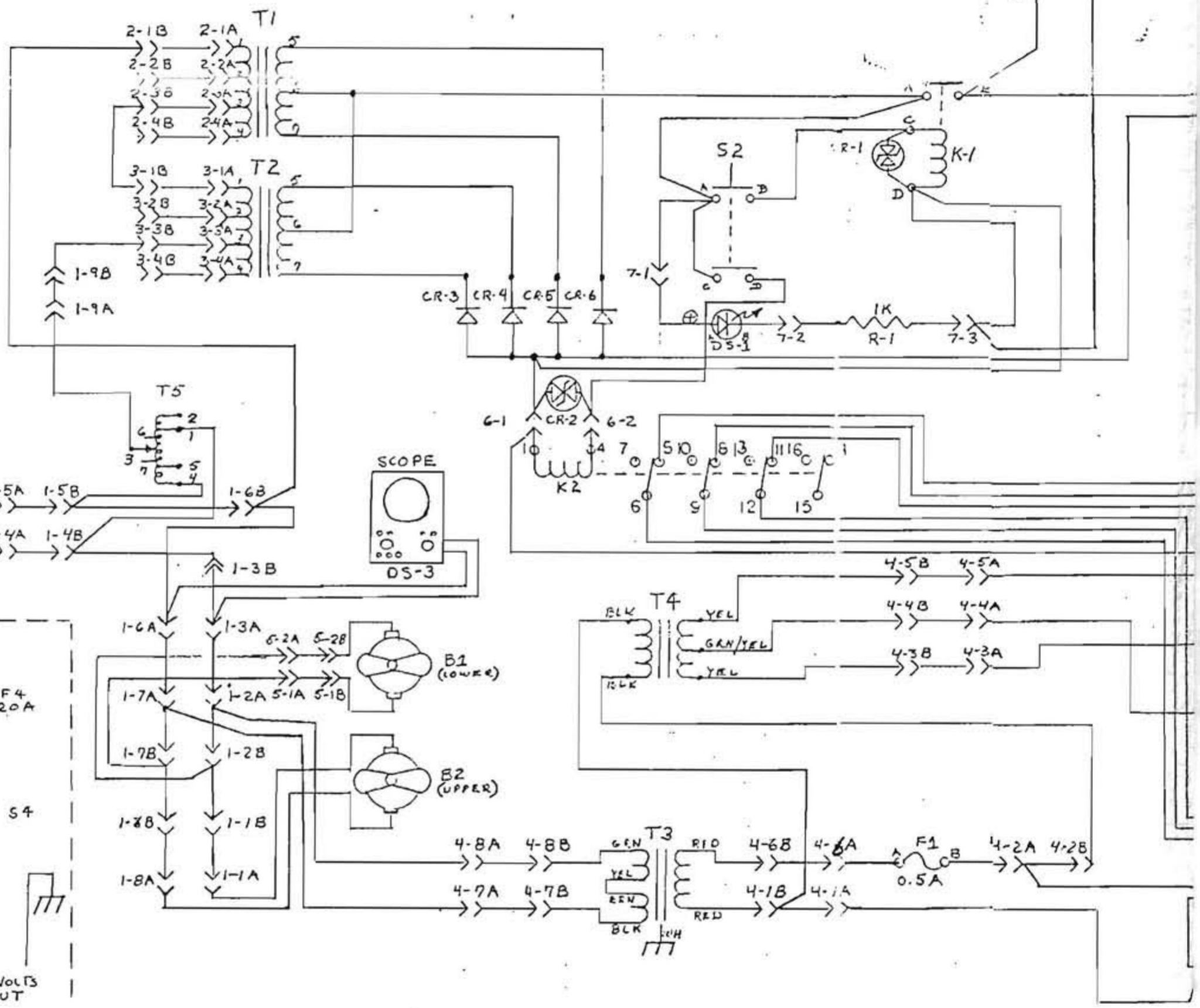

Electrical Rebuilder's ERA FOUNDED 2001 ASSOCIATION

8/19/85
(OT-0711)

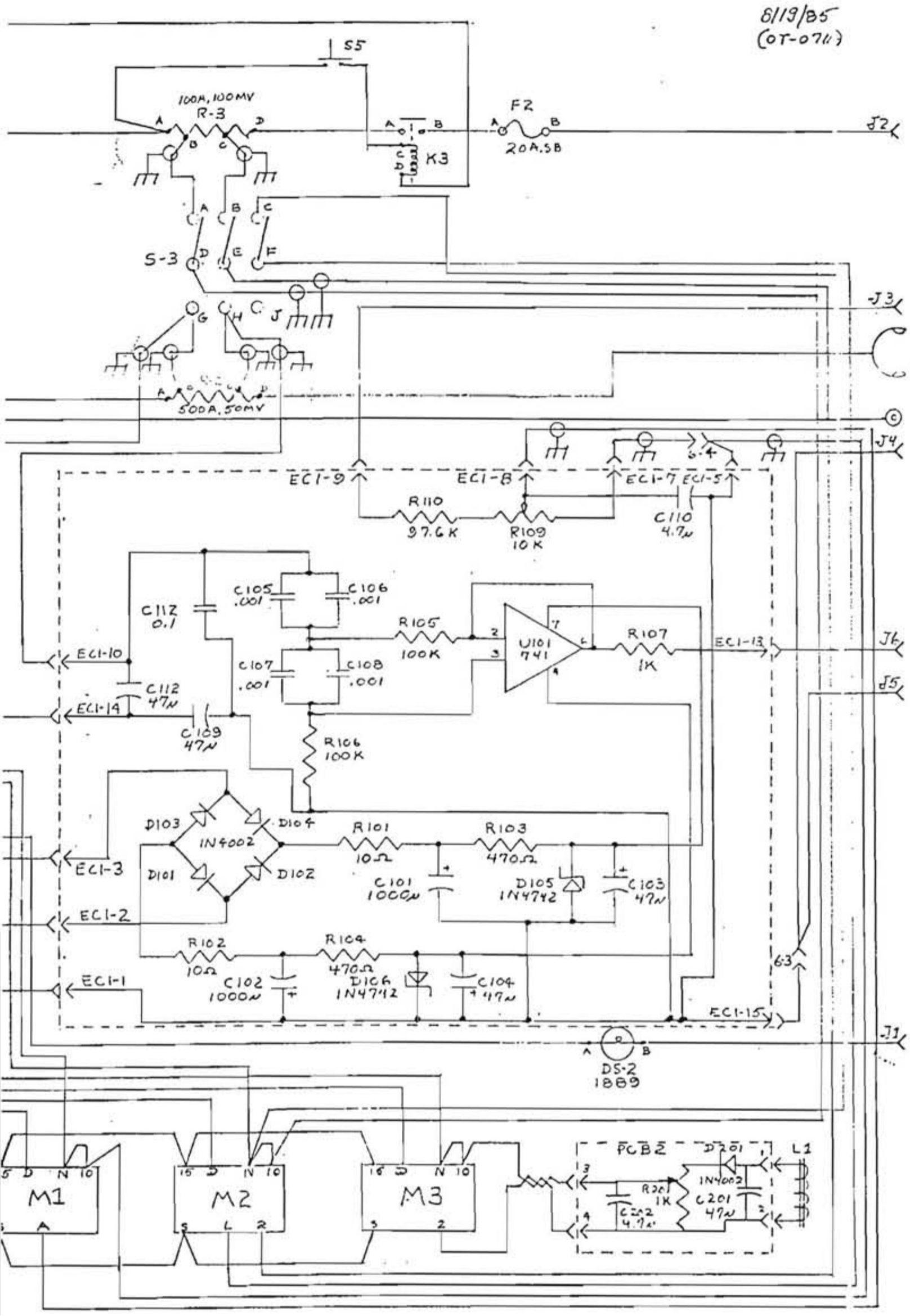

UT-0711

UT-0047

Electrical Rebuilder's ERA FOUNDED 2001 ASSOCIATION