CHECK LIST

Please inspect the tester and accessories immediately after receiving them and report any damages incurred during shipment. Your shipment should contain the standard items shown here, plus optional pieces as ordered.

BASIC PANEL

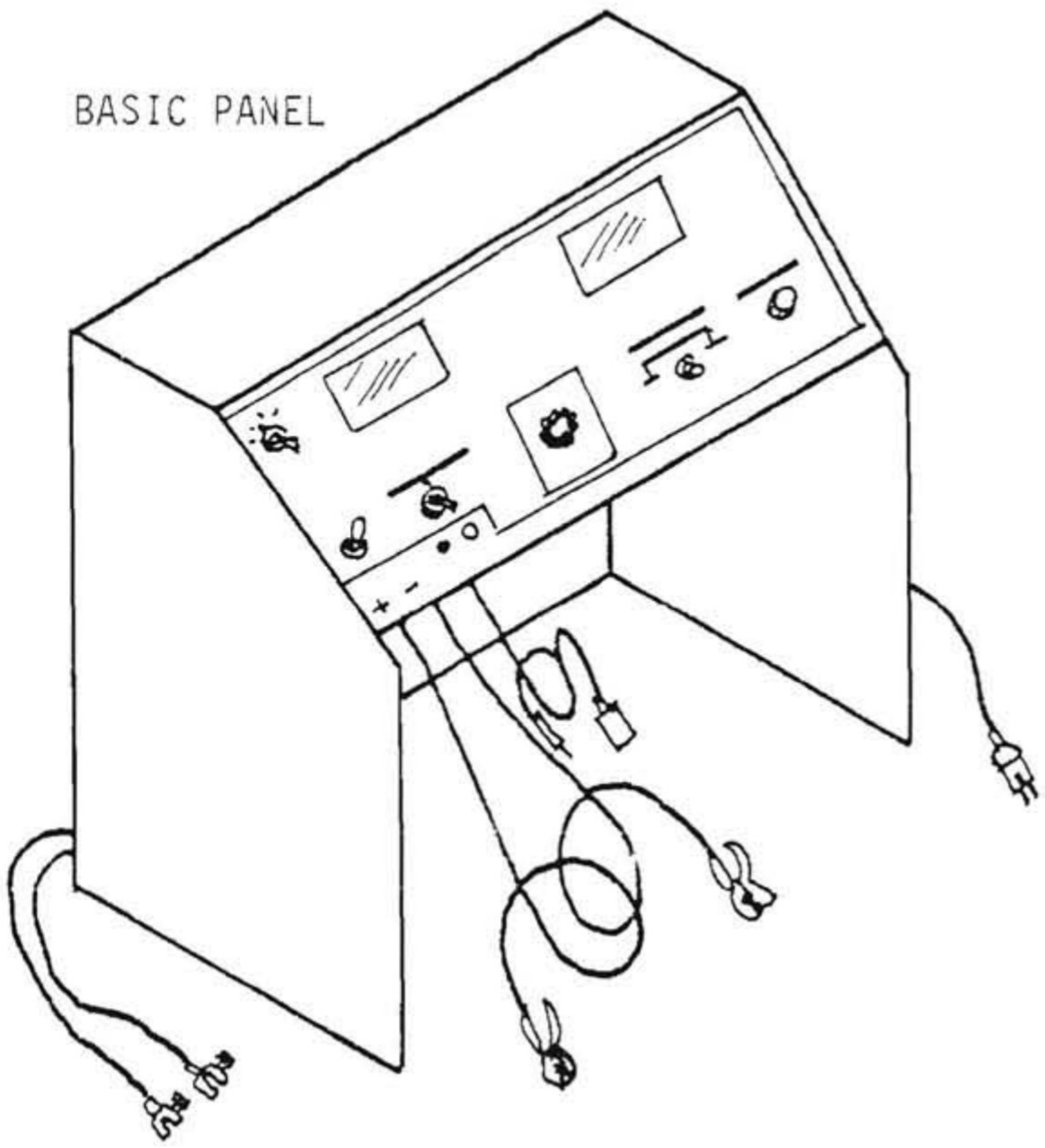

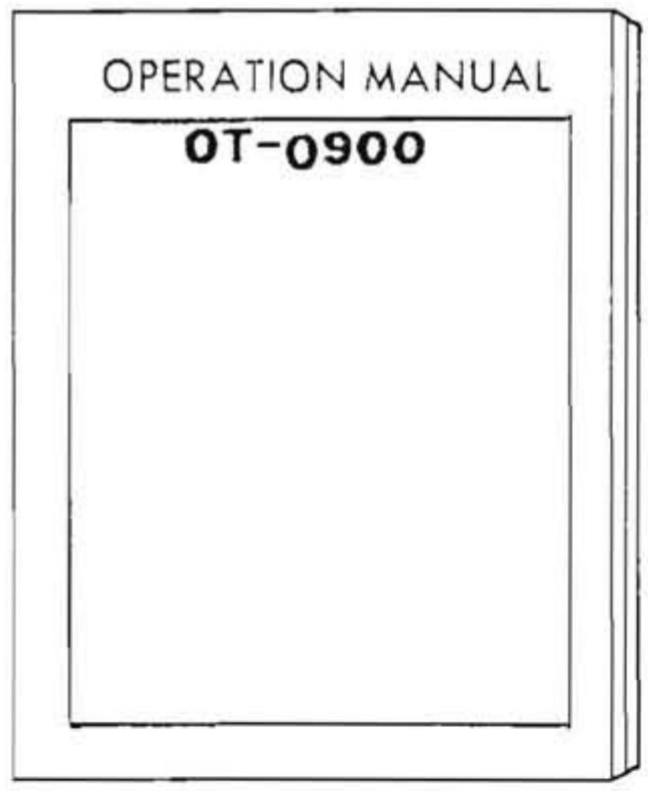

OPERATION MANUAL

EXTRA FUSES



WARRANTY

Electrical Rebuilder's ERA FOUNDED 2001 ASSOCIATION

OPERATION INSTRUCTIONS

GENERAL DESCRIPTION & POWER
EQUIREMENT

This machine designed to a building block type piece of equipment where you can use it to fill your needs in all parts of your shop by buying basic unit and then the accessaries you need for a specific test area

Description: This tester can be equipped to test the following:

'lternators
tarters
Generators
Solenoids
Stators
Rotors
Fields

The tester will read Volts from 0 to 99, and Amps on two scales 0 to 10 and 0 to 250.

This tester uses a battery for power load. A carbon pile can be used to load an alternator or generator to check for maximum output, after the switch is in the on position the + lead is hot.

Power "on" switch turns on the AC power to the meters. This may be left on all day in a busy shop.

Alternator or generator field switch is to select whether the field lead supplies 12 Volts to the field lead or furnishes ground to the field lead. In either position the current will show on the Amp meter in 10 Amp position

Select switch to select the device being tested (alternator, generator, or starter). When this switch is off there is no power on the + lead. By pushing the switch into the starter position the + lead becomes hot. Current in this circuit will show on the Amp meter in 250 Amp position.

Ampere select switch selects either 10 Amp position for field plate #1 or 250 Amps position for alternator output or starter input. (- and + lead)

Motor run switch will cause the 3 Hp motor to run and drive an alternator or generator.

There is a 10 Amp breaker for the green field lead under the panel.

In B circuit - lead to green
A circuit + lead to green

HOOK-UP

Depending on the combination of units you bought, to hook up battery follow the markings on the cables that come out of the back of your machine. For example: 6, 12, 24, 32.

Make sure all connections are tight and batteries are in a well vented area.

Plug 110 Volts cord in to a UL-approved socket that meets all required safety standards.

A motor is used with this bench. Have an authorized electrician install power to the bench so as to meet all required safety standards.

Alternator & Generator Testing

To hook up and test alternators and generators refer to the wall charts shipped with the machine. This chart will aid you in testing as well as familiarize you in switch positioning, connection and sample readings.

Electrical Rebuilder's ERA FOUNDED 2001 ASSOCIATION

Starter Testing

ount the starter to be tested on the V-block, making sure the open area of the starter drive is in the special protective cage. Tighten the screw clamp to prevent starter movement during the test.

On a starter with a solenoid, connect a small jumper to the solenoid post (normally marked "S").

Besure the starter drive moves all he way forward in the drive housng as the solenoid is engaged.

For additional information refer to the wall chart in the starter testing.

STATOR TESTING

ROTOR TESTING

OLENOID TESTING

REFER TO WALL CHART
FOR SAMPLE CONNECTIONS
AND READINGS

OPERATION

YOUR MACHINE IF ORDERED TO TEST ALTERNATORS AND GENERATORS WILL COME EQUIPPED WITH AN OT-1242 MOUNTING FIXTURE

OT-1243 Generator Mount

Set your mount on the extension pin and tighten the nut. Select the proper pin size for the unit under test, insert and tighten allen set screw. Then slide the mounting bar to the right until the mount is snug against the inside COM end frame.

OT-1244 H.D. Alternator Adaptor

Mount the adaptor on your OT

OT-1244 H.D. Alternator Adaptor

Mount the Adaptor on your OT-1245 as illustrated using the .375 mount pins on your OT-1245. Select the proper mount pin. Use the long. 275 to run the 100 Mopar. Use the long. 500 for Delco. Other applications are also possible.

OT-1245 Alternator Mount

Set your mount on the existing pins and tighten the nut on the 1/2 13 stud. Select the proper mounting pin or pins as shown below. Most foreign alternators and single bolt, bottom mount, Americal alternators mount on post B. Most two foot medium and heavy duty alternators mount on post A.

CHECK OUT

To completely check out this machine run an alternator that you know is good and a Ford Generator if all readings are approximately the same as the wall chart the machine is functioning properly, if they are not refer to the trouble shooting section of this manual.

Electrical Rebuilder's ERA FOUNDED 2001 ASSOCIATION

MAINTENANCE

2. Charge the battery approx. 3 minutes at 40 Amps and

Electrical Rebuilder's ERA FOUNDED 2001 ASSOCIATION

BASIC UNITS

BASIC PANEL

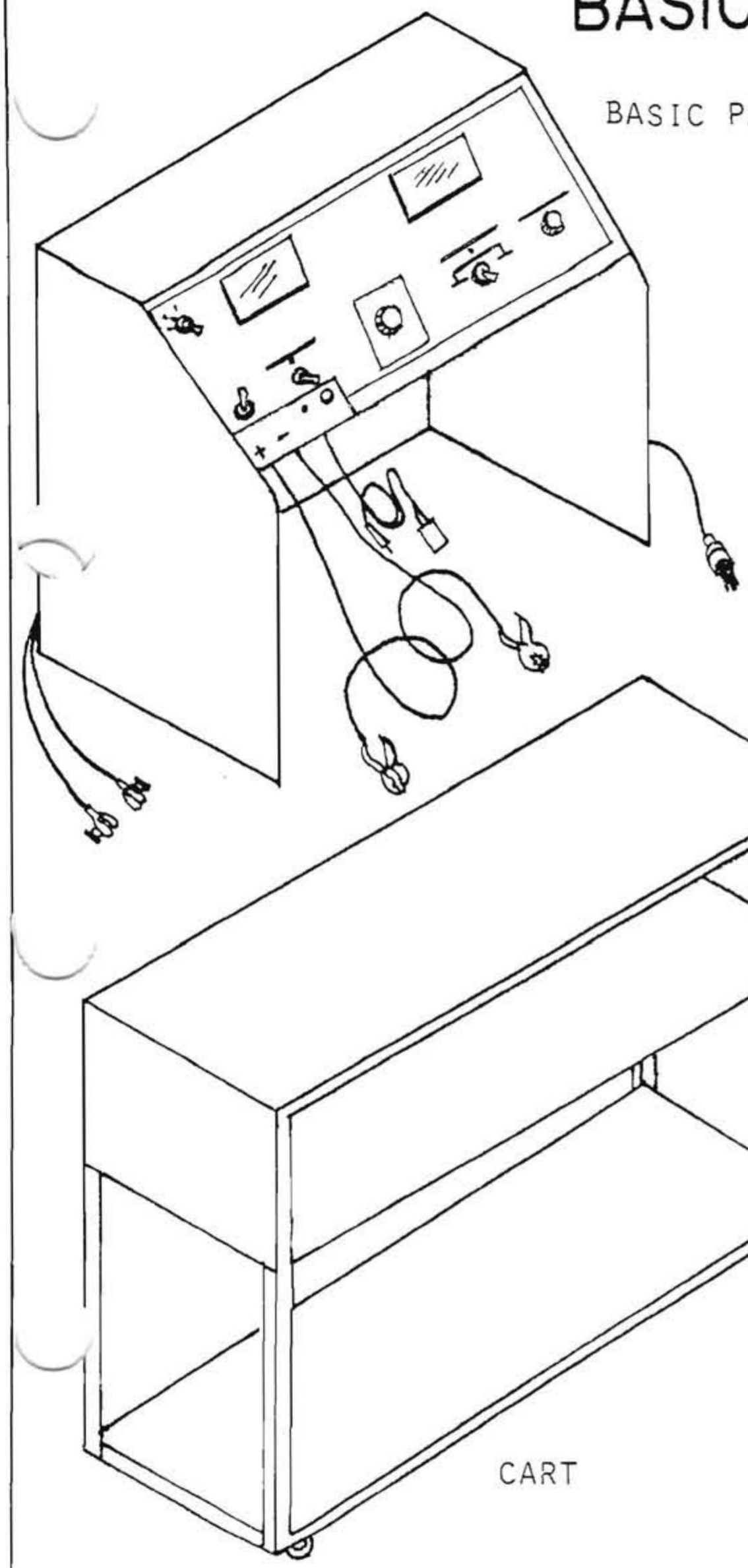

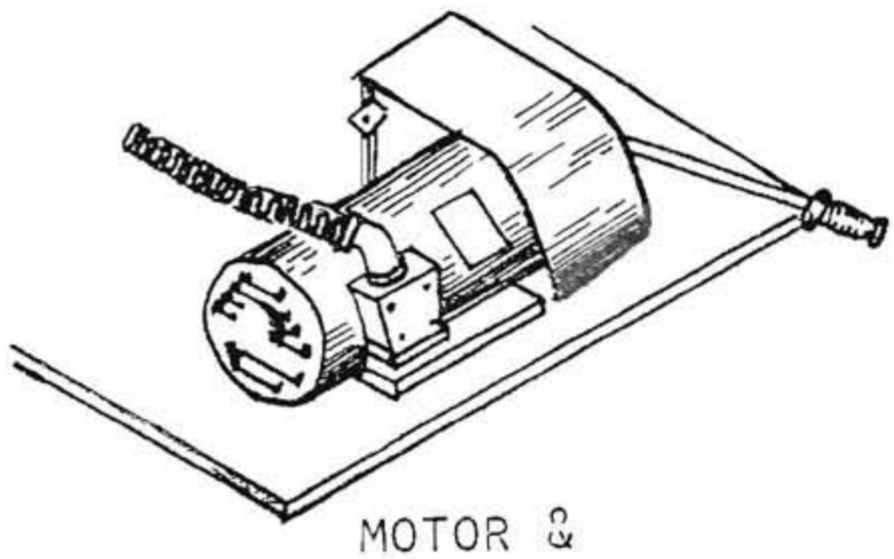

MOTOR &
MANUAL BELT TENSIONER

STARTER HOLDING FIXTURE

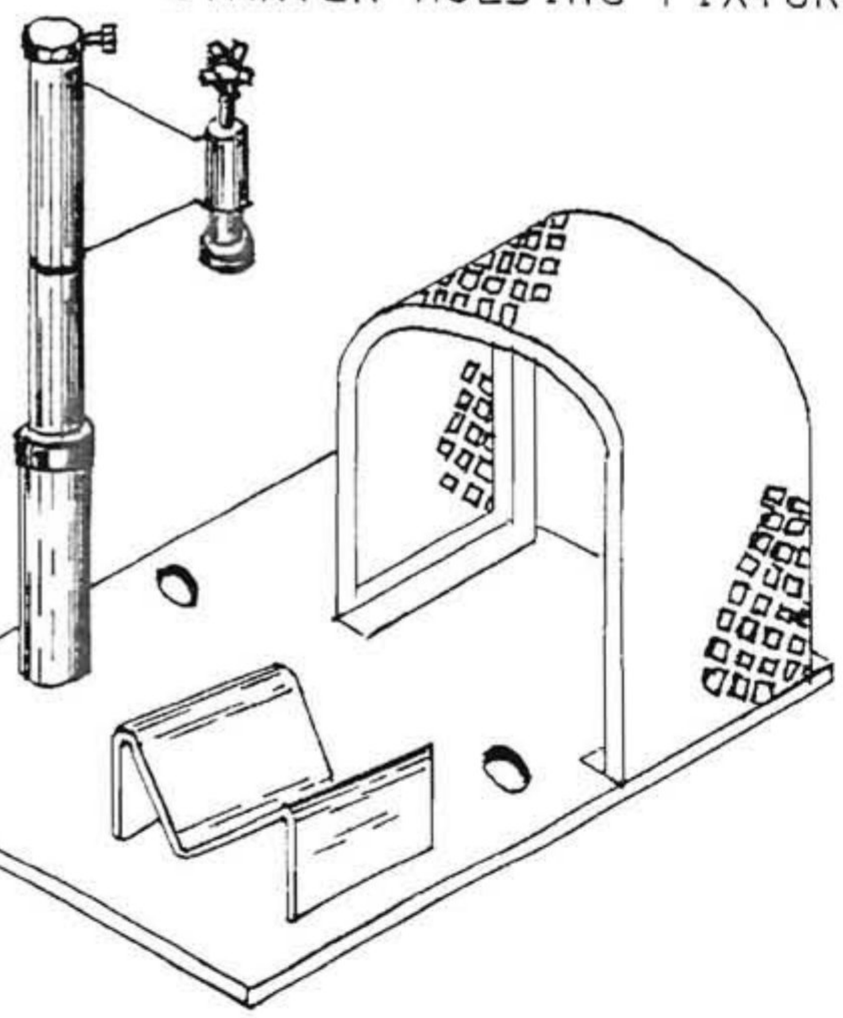

CART

WHEN UNIT IS SHIPPED FROM FACTORY AN EXPLODED VIEW AND PARTS LIST WILL ACCOMPANY UNIT ON BASIC UNIT AND/OR ALL OPTIONS ORDERED, THIS WILL BE INCLUDED AS A SUPPLEMENT TO BASIC MANUAL

Electrical Rebuilder's ERA FOUNDED 2001 ASSOCIATION

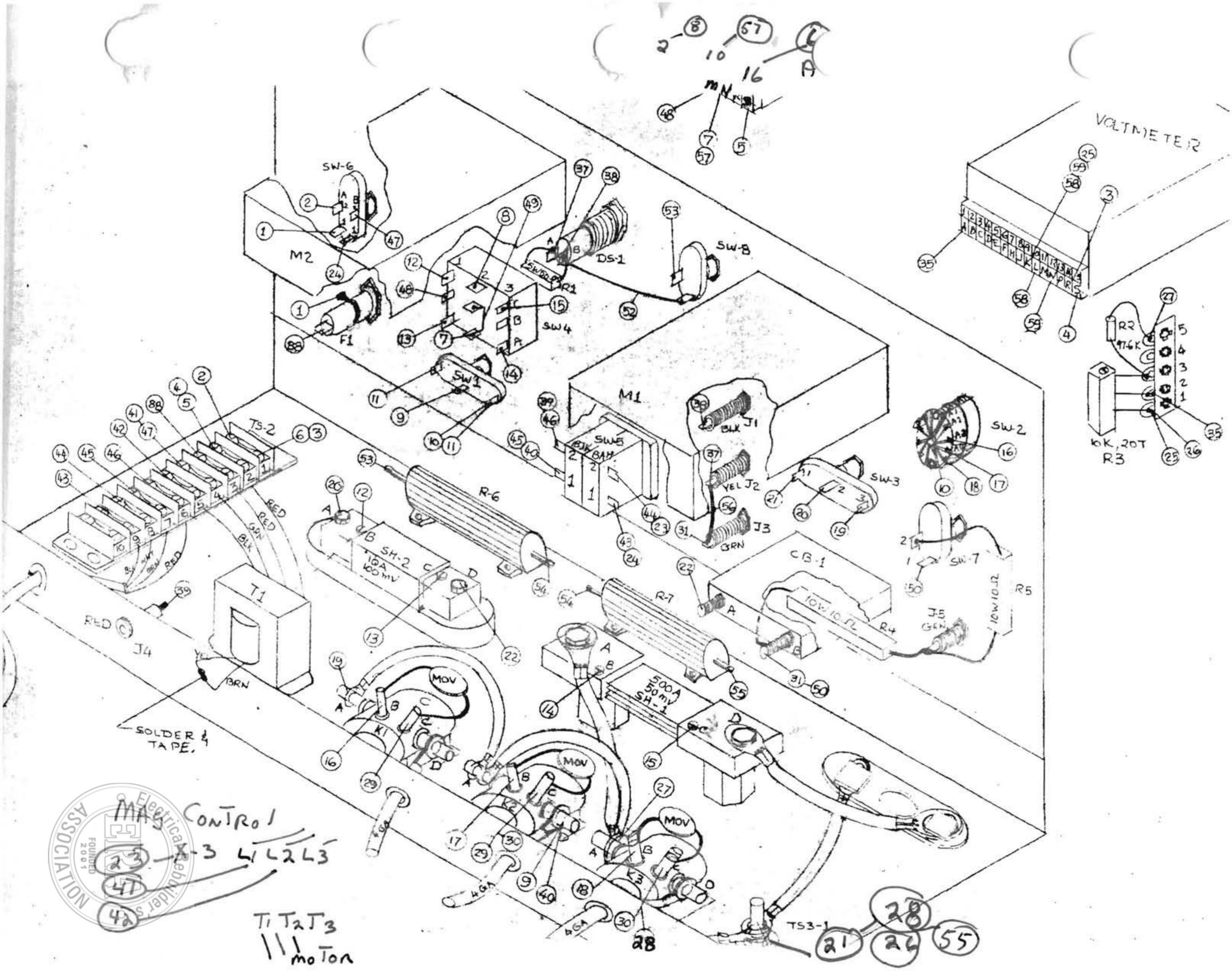
VOLTMETER
SW-6
M2
F1
DS-1
R1
SW-8
SW4
SW1
M1
SW-5
J1
J2
J3
SW-2
SW-3
R2
97.6K
10K, 20T
R3
TS-2
R-6
SH-2
10A
100mV
T1
RED
J4
BRN
SOLDER & TAPE.
CB-1
10W 10Ω
R4
J5
GRN
R5
R-7
500A
50mV
SH-1
MOV
K1
K2
K3
4GA
TS3-1
MAG CONTROL
X-3 L1 L2 L3
T1 T2 T3
motor

AIR LINE LUBRICATION

The proper lubrication of air tools, valves, cylinders, motors, etc. requires the use of an oil that is specifically recommended for use in air line lubricators. An air line lubricant is often subjected to very adverse conditions; high temperatures, dirty air, and oxidation caused by flowing air are a few. Pneumatic devices are likewise subjected to these same conditions, plus the fact that they may set idle for long periods of time. Unless the oil has superior oxidation stability and high film strength, it will blow off the surfaces to be oiled leaving a tacky residue known as "varnish".

An important criterion is viscosity. If an oil is too heavy, it will not be atomized and carried downstream to the component requiring lubrication. Often it will reclassify in the pipe. While it is impossible to guarantee the success of any lubricating oil because of the variables, we have found that oils having the following characteristics usually perform quite well:

1. Viscosity: 100 - 150 SUS at 100°F.
2. High Viscosity Index: over 90.
3. Superior oxidation stability as determined by ASTM test D943: over 2000.
4. Anti-Foaming.
5. High film strength.
6. Compatible with Buna N rubber.
7. Aniline range: 180 -210.

The following is a partial list of lubricants which meet all of the foregoing specifications. Consult your supplier for his recommendations of an oil which meets the specifications.

MANUFACTURER	BRAND NAME
American Oil Company	Rykon No. 11 American Oil No. 15 (was Stanoil No. 15)
Gulf Oil Company	Harmony No. 43AW Harmony No. 44
Mobil Oil Company	D.T.E. Light
New York and New Jersey Lubricant Company	A-88/NR
Shell Oil Company	Tellus No. 27
Sinclair Oil Company	Dura No. 150
Sun Oil Company	Sunvis No. 701 Sunvis No. 706
Texas Oil Company	Regal "A" R & O

Electrical Rebuilder's ERA FOUNDED 2001 ASSOCIATION

TROUBLE SHOOTING & ADJUSTMENTS

TEST POINTS	SOLUTION TO PROBLEM IF READINGS ARE INCORRECT
If motor will not run we recommend under this problem you call an authorized electrician to check further	Blown House fuse or circuit breaker Motor control breaker blown Motor run switch
Turn power switch on with no leads hooked up from the front of machine (battery hook up to the rear of machine) Volt meter should read battery voltage Amp meter should read 000	Bad 110 power lead Blown Fuse Bad power supply Bad Amp meter Bad Volt meter If one meter reads properly and the other does not, the meter or connections could be bad

ook up a standard Ford alternator as shown
on the wall chart
Position switches as follows:

Power	Alternator & Gen'.	Select Alt.	Motor Run	Amp Select	Volts	12.5
A	B		Not Used	0-10	Amps	2.7

IF THE ABOVE AMP & VOLT READINGS ARE NOT PRESENT	POSSIBLE CAUSE
	1 - SLECT SWITCH 2 - ALTERNATOR GENERATOR SWITCH 3 - AMP SELECT SWITCH 4 - SOLENOID
TURN SELECT SWITCH TO OFF, THEN BACK ON, SLIGHT CLICK SHOULD BE HEARD FROM SOLENOID IF NOT	CHECK SELECT SWITCH SOLENOID

Electrical Rebuilder's ERA FOUNDED 2001 ASSOCIATION