mini tune
mini tune
mini tune
mini tune
mini tune
mini tune
mini tune

GENERATOR - ALTERNATOR
STARTER FREE SPIN TEST ANALYZER

Self-Contained — No Batteries Needed
Model 3001-3002-3003-3004

mini tune
mini tune
mini tune
mini tune
mini tune

SD0514
MORGAN McDONALD
1001 Commerce Rd.
Jefferson GA 30549
1-706-362-4179

Operation Instructions

Form 3001-145
All 3001, 3002, 3003, 3004

IMPORTANT

1. BEFORE YOU PLUG YOUR TESTER INTO A WALL OUTLET MAKE SURE THAT THE LINE CORD RECEPTACLE HAS THE GROUND PIN IN PLACE. DO NOT REMOVE THE GROUND PIN FROM THE RECEPTACLE SINE THIS WILL RESULT IN PROBLEMS WHEN TESTING FORD STARTERS.

2. VOID EXTENSION CORDS IF POSSIBLE. IF YOU USE AN EXTENSION CORD MAKE SURE IT IS OF HEAVY DUTY MATERIALS, AND IS NOT LONGER THAN 15 FEET.

3. WHEN HOOKING UP YOUR TESTER TO THE ACTUAL LINE VOLTAGE MAKE SURE THAT YOU HAVE AT LEAST A 15 AMP CIRCUIT BREAKER. WE PREFER A 20 AMP. IT IS IMPORTANT THAT YOU DO NOT HAVE ANYTHING ON THE SAME LINE AS THE TESTER.

4. TURN YOUR VISE AROUND, MAKE SURE THAT THE BELT GUARD IS IN A SECURE POSITION.

5. IN SOME INSTANCES YOU WILL SEE SPECIAL FOOT NOTES. IF YOU DO NOT FOLLOW THESE SPECIAL NOTES YOU WILL HAVE PROBLEMS WITH ALTERANTORS, GENERATORS, AND STARTERS THAT COULD BE GOOD WORKING UNITS. WE SUGGEST THAT YOU READ THE MANUAL WHEN TESTING ALTERNATORS, GENERATORS, AND STARTER.

6. SERVICE:

IT IS NOT NECESSARY TO SHIP YOUR TEST BENCH TO THE SERVICE CENTER UNLESS THERE IS A SERIOUS PROBLEM NOTED. MINI TUNE IS HERE TO HELP YOU WITH ANY INSTRUCTION. HOWEVER, WE ASK FOR YOUR CORPERATION BY GIVING US A CALL COLLECT TO MR. SERVICE AT; 707-763-7460.

TABLE OF CONTENTS

1. IMPORTANT NOTICE
2. INFORMATION HINTS
3. EXPLANATION OF TEST BENCH
4. DESCRIPTION AND TECHNICAL DATA
5. ACCESSORIES
6. OPERATION
7. FIRST TEST (MECHANICAL)
8. DELCOTRONS WITH INTERNAL REGULATOR
9. SELF-EXCITING REGULATOR TESTING
10. CHRYSLER ISOLATED FIELD ALTERNATORS
11. 24 VOLT TEST PROCEDURE
12. GENERATOR TESTING
13. STARTER TESTING
14. SOLENOID TESTING
15. STARTER CONNECTIONS
16. STARTER AMPERAGE DATA
17. 3001-25 STARTER STRAP USAGE
18. HOOK-UP AND TEST PROCEDURES
19. QUICK REFERENCE CHARTS, ALTERNATORS, GENERATORS AND FOREIGN ALTERNATORS

LEAD COLORS

RED- BATTERY TERMINAL LEAD
YELLOW- STATOR TERMINAL LEAD
GREEN- FIELD TERMINAL LEAD

R-F PLUG SEE GREEN AND YELLOW JOINING
RF MEANS RELAY FIELD PLUG.
GROUND- SEE GROUND ALIGATOR CLIP
NOTE MAKE SURE THE CABLE LEADS ARE ALWAYS TIGHTLY CONNECTED TO THE GROUND CLIP

IMPORTANT NOTICE

WE STRONGLY RECOMMEND THAT YOU FAMILIARIZE YOURSELF WITH THE 3001 ALTERNATOR, GENERATOR, STARTER TEST BENCH BY READING THE INSTRUCTION MANUAL SUPPLIED WITH THE 3001.

WE HAVE RECEIVED NUMEROUS COMPLAINTS ABOUT THE OPERATION OF THE UNIT. IF THE OPERATOR WOULD HAVE TAKEN THE TIME TO READ THE MANUAL, THESE COMPLAINTS WOULD NOT HAVE COME ABOUT.

WE AGREE THAT FROM TIME TO TIME QUESTIONS DO COME UP WHERE ALL OF US ARE IN DOUBT. IN SUCH A CASE, PLEASE CALL THE FACTORY (COLLECT) OR, EVEN BETTER, MAIL US THE ALTERNATOR, GENERATOR OR STARTER AND WE WILL WRITE UP AN INDIVIDUAL TEST REPORT WHICH WILL THEN BENEFIT EVERYONE.

IT SHOULD ALSO BE KNOWN TO YOU THAT OUR CUSTOMER SERVICE IS AVAILABLE ANYTIME: OFFICE HOURS ARE FROM 8:00 A.M. TO 4:00 P.M., CALIFORNIA TIME. ASK FOR SERVICE ASSISTANCE AND WE WILL ANSWER ANY QUESTIONS ON SERVICE PROBLEMS YOU ENCOUNTER.

INFORMATION HINTS:

1. CONNECT YOUR TEST BENCH TO A GOOD GROUNDED OUTLET. WE RECOMMEND A 15 TO 25 AMP CIRCUIT BREAKER. DO NOT USE AN EXTENSION CORD OR REMOVE THE GROUND PIN FROM THE PLUG WHICH GOES INTO THE RECEPTACLE.

2. TURN YOUR VISE AROUND SO ALL THREE HOLD-DOWN KNOBS PRESS THE VISE DOWN SECURELY. THE REASON THE VISE IS BOLTED BACKWARDS WITH ONLY TWO KNOBS HOLDING THE VISE IS TO PREVENT DAMAGE DURING SHIPPING.

3. ALIGN YOUR BELT WITH MOTOR/ALTERNATOR PULLEY.

4. WHEN OPERATING THE GENERATOR OR ALTERNATOR PORTION OF THE TEST BENCH, PLEASE KEEP YOUR BELT GUARD IN POSITION TO AVOID BODILY INJURY. THE BELT GUARD SHOULD ALWAYS BE IN POSITION BEFORE STARTING THE BENCH.

5. WHEN OPERATING YOUR STARTER, PLACE THE STARTER INTO THE VISE AND BOLT DOWN THE STARTER. AGAIN, PLACE THE BELT GUARD IN POSITION BEFORE OPERATING THE STARTER.

NOTE:

IF YOU FAIL TO DO THIS AS RECOMMENDED IN POINT 5, YOU MAY DAMAGE THE STARTER OR HURT YOURSELF.

METER PANEL DESCRIPTION

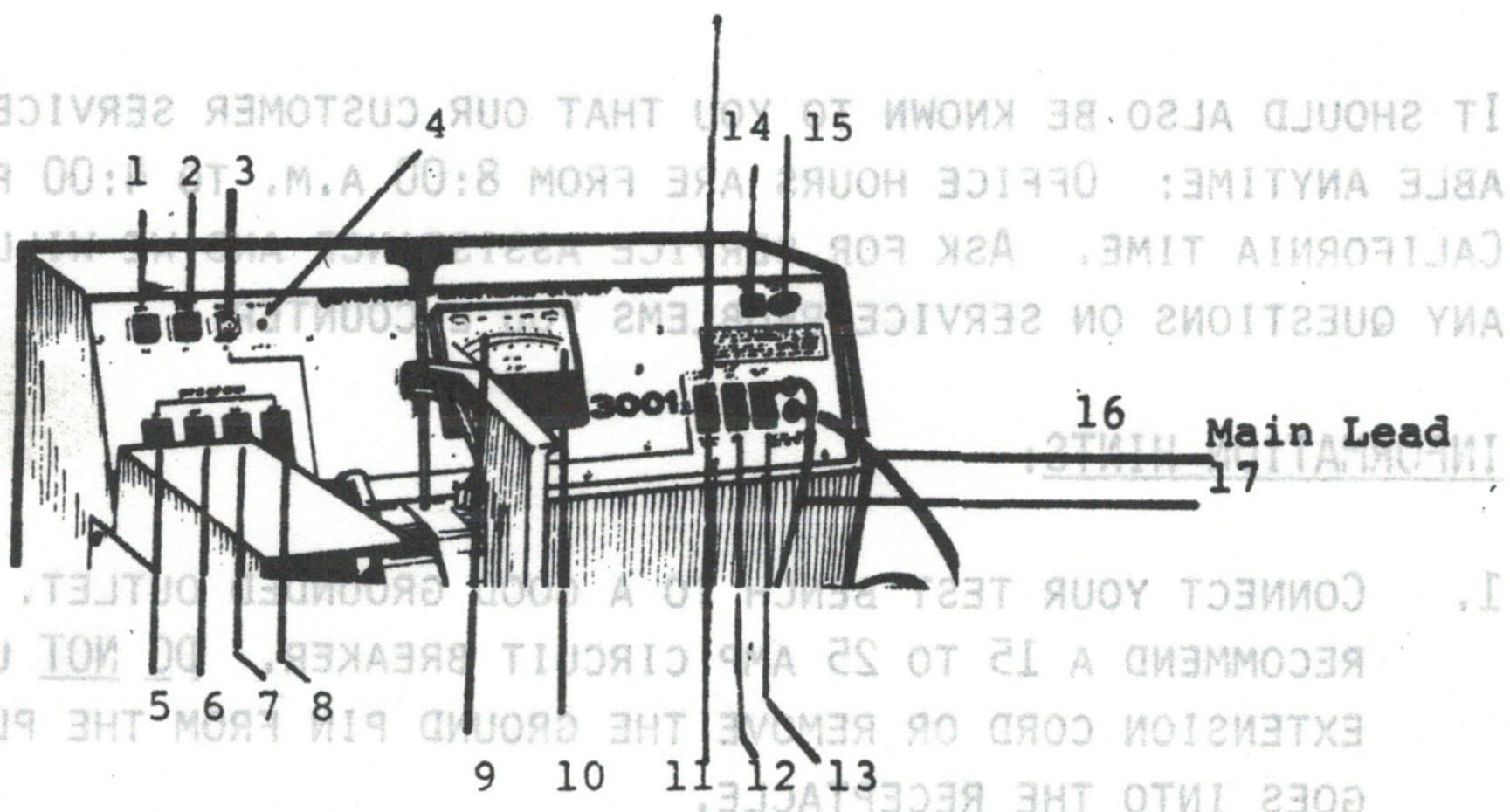

EXPLANATION

LIGHT 1 - GREEN IN COLOR, IS YOUR LOAD INDICATOR LIGHT AND COMES ON IF THE ALTERNATOR OR GENERATOR PRODUCES A CURRENT UNDER A FIXED LOAD.

LIGHT 2 - GREEN IN COLOR, IS YOUR STATOR RELAY INDICATOR LIGHT AND ONLY WORKS WHEN YOU HAVE AN ALTERNATOR WITH BUILT-IN STATOR, AND MADE THE CONNECTION PROPERLY.

LIGHT 3 - CLEAR IN COLOR, IS YOUR DIODE TRIO INDICATOR LIGHT WHICH COMES ON IMMEDIATELY WHEN YOU TURN THE TEST BENCH ON NO MATTER IF YOU HAVE A GENERATOR OR AN ALTERNATOR MOUNTED. THE LIGHT SHOULD GO OUT WHEN YOU PRESS THE LOAD SWITCH INDICATING ALTERNATORS WITH INTERNAL REGULATOR. ALL INTERNAL MOUNTED REGULATORS WORK UNDER THIS PRINCIPLE, MAY IT BE DOMESTIC OR FOREIGN. WHEN TESTING ALTERNATOR OR GENERATOR WITHOUT REGULATORS, THIS LIGHT WILL STAY ON.

LIGHT 4 - RED IN COLOR, IS YOUR DEFECTIVE ALTERNATOR INDICATOR LIGHT AND COMES ON WHEN YOU HAVE A MAIN DIODE PROBLEM OR A STATOR IN BALANCE PROBLEM, MEANING YOUR ALTERNATOR IS DEFECTIVE. FLICKERING MEANS INTERFERENCE BUT DOES NOT MEAN ALTERNATOR IS DEFECTIVE. THE RED LIGHT MUST BE ON BRIGHT RED BEFORE ALTERNATOR CAN BE FOUND DEFECTIVE

SWITCH 5 - INDICATES ALTERNATOR OR GENERATOR TYPE. PRESS TO DESIRED POSITION, DEPENDING ON WHAT YOU WISH TO TEST.

SWITCH 6 - INDICATES A-GENERATOR TYPE SYSTEMS; B-GENERATOR TYPE SYSTEMS. A-CIRCUIT GENERATORS FIELD TIED TO ARMATURE. B-CIRCUIT GENERATORS FIELD CURRENT SUPPLIED WITH THE REGULATOR.

AS A GENERAL RULE - GENERAL MOTORS, CHRYSLER AND AMERICAN MOTORS VEHICLES WITH GENERATORS, REFER TO "A" TYPE CIRCUIT. ON FORD VEHICLES WITH GENERATORS REFER TO "B" CIRCUIT.

NOTE: GENERALLY, AN "A" GENERATOR HAS ITS BATTERY TERMINAL ON TOP OF GENERATOR CASE. A "B" TYPE CIRCUIT HAS THE BATTERY TERMINAL ON THE REAR OF THE GENERATOR HOUSING.

SWITCH 7 - INDICATES POSITIVE OR NEGATIVE GROUND. MOST SYSTEMS ARE NEGATIVE. CONSULT YOUR MANUAL FOR FURTHER SPECIFICATIONS.

SWITCH 8 - INDICATES 6 VOLT SYSTEMS OR 12-24 VOLT SYSTEMS. A 24 VOLT SYSTEM IS TESTED ON A 12 VOLT. YOU, THEN, READ ONLY ONE-HALF OF THE VOLTAGE ON THE OUTPUT.

SCALE 9 - IS YOUR VOLT METER SCALE. IT READS 0-18 VOLTS AND ONLY WORKS WHEN YOU TEST AN ALTERNATOR OR A GENERATOR FOR ITS OUTPUT CAPABILITIES. REMEMBER, THIS IS NOT A FULL OUTPUT TESTER, AND THEREFORE NO AMP METER IS SUPPLIED TO TEST ALTERNATORS OR GENERATORS AT FULL OUTPUT. (NOTE: REFER TO MODEL SERIES 5000 AND 7000 - FULL OUTPUT ANALYZER.)

SCALE 10 - IS YOUR AMP METER WHICH SHOWS 0-200 AMPS AND ONLY WORKS WHEN YOU FREE SPIN YOUR STARTER MOTOR. WHEN CONDUCTING A SOLENOID TEST, THE TEST RESULTS ARE ALSO IN AMPERAGE.

SWITCH 11- IS YOUR FIXED LOAD SWITCH TO TEST ALTERNATORS AND GENERATORS UNDER A FIXED 9.5 AMP LOAD. PRESS THE TOP PART OF YOUR SWITCH IF YOU TEST ALTERNATORS WITH INTERNAL REGULATORS, DOMESTIC OR FOREIGN. PRESS THE BOTTOM PART OF THE SWITCH IF YOU TEST ALTERNATORS WITHOUT INTERNAL REGULATORS OR GENERATORS. THE LOAD SWITCH MUST ALWAYS BE PUSHED EVEN IF THE S.E.R. IS BEING TESTED.

SWITCH 12- IS YOUR MOTOR SWITCH. PRESS TOP PART AND MOTOR RUNS FORWARD. PRESS BOTTOM PART AND MOTOR RUNS IN REVERSE. MAKE SURE MOTOR STOPS COMPLETELY WHEN SWITCHING FROM ONE POSITION TO THE OTHER AT ALL TIMES.

SWITCH 13- IS YOUR STARTER MODULE SWITCH. PRESS ONLY AFTER YOU ARE SURE THAT ALL CONNECTIONS ARE MADE PROPERLY AND THEN SECONDS ONLY. YOUR STARTER MOTOR MUST BE PLACED INTO THE MAIN VISE AND PROPERLY SECURED. PRESS MOMENTARILY, TAKE YOUR READING FROM THE AMP SCALE AFTER THE NEEDLE STABILIZES, DO NOT OVER-REV STARTER MOTOR OR EVEN WORSE, TRY TO BREAK A DEFECTIVE STARTER LOOSE. NOTE: IF A FEFECTIVE MOTOR DOES NOT TURN, DON'T TRY IT A SECOND TIME.

SWITCH 13, CONTINUED

THE AMP SCALE WILL INDICATE ACTUAL STARTER AMPERAGE DRAW, FREE SPIN, NO LOAD. PRESS STARTER SWITCH FOR THE PERIOD OF 2 SECONDS ONLY. WHEN METER NEEDLE STABILIZES, RELEASE SWITCH AFTER YOU TAKE THE READING. EXCESSIVE FREE SPIN OVER THE MANUFACTURER'S GIVEN TIME OF 2 SECONDS WILL CAUSE DAMAGE TO THE STARTER.

LIGHT 14 - IS YOUR IGNITION RELAY INDICATOR LIGHT AND ONLY WORKS WHEN YOU MAKE YOUR CONNECTION TO IGNITION AND GROUND OF THE SOLENOID. (NOTE: SEE SOLENOID TEST EXPLAINED UNDER OPERATION.)

FUSE HOLDER 15 - USE A 3/4 AMP FAST BLO FUSE AVAILABLE FROM OUR SERVICE CENTERS OR ANY RADIO SHACK STORE IN YOUR AREA.

MAIN HARNESS TEST LEAD 16

A	-	IS YOUR GROUND CABLE	MARKED GROUND
B	-	IS YOUR BATTERY TERMINAL LEAD CABLE	MARKED BATTERY (RED)
C	-	IS YOUR FIELD LEAD CABLE	MARKED FIELD (GREEN)
D	-	IS YOUR STATOR LEAD CABLE	MARKED STATOR (YELLOW)
E	-	A CONNECTOR WITH TWO CLIPS FOR THE EARLY DELCO WITHOUT INTERNAL REGULATORS, KNOWN AS A RF PLUG	

DELCOTRON TEST LEAD 17 - TO BE USED FOR ALTERNATORS WITH INTERNAL REGULATORS, DOMESTIC OR FOREIGN.

VISE - THE VISE IS AN EXCLUSIVE DESIGN OF MINI TUNE'S AND TAKES ALL ALTERNATORS, GENERATORS AND STARTERS -- NO MATTER WHAT SHAPE. WHEN TESTING ALTERNATORS, USE THE BOLT-TYPE BRACKET SUPPLIED TO HOLD THE ALTERNATOR. WHEN TESTING GENERATORS OR STARTERS, REMOVE THAT GUIDE PIN BY UNSCREWING THE HOLD-DOWN KNOB LOCATED ON THE SIDE OF VISE. WHEN TESTING COMPONENTS, MAKE SURE ALL UNITS ARE BOLTED DOWN TIGHTLY.

NOTE - MAKE SURE THAT YOU PLACE THE BELT GUARD IN ITS POSITION BEFORE OPERATING ANY GENERATOR, ALTERNATOR OR STARTER.

IMPORTANT

AGAIN, FOR SHIPPING PURPOSES, WE HAVE TURNED THE VISE AROUND. MAKE SURE WHEN YOU UNPACK THE TEST BENCH THAT YOU PLACE THE VISE IN ITS PROPER POSITION BY BOLTING IT DOWN WITH THREE HOLD-DOWN KNOBS SUPPLIED ON THE BASE.

WE FURTHER RECOMMEND THAT YOU READ YOUR INSTRUCTIONS SUPPLIED TO MAKE FULL USE OF THE GENERATOR, ALTERNATOR, STARTER ANALYZER.

IMPORTANT

FOR MORE PROFESSIONAL TESTING OF STARTERS, WE HAVE DEVELOPED A STARTER VISE. IF SUCH UNIT IS NEEDED, PLEASE MAIL YOUR PAYMENT IN THE AMOUNT OF $ 69.95 TO MINI TUNE, INC., 979 TRANSPORT WAY, PETALUMA, CA 94952. PART NUMBER 3001-24-I

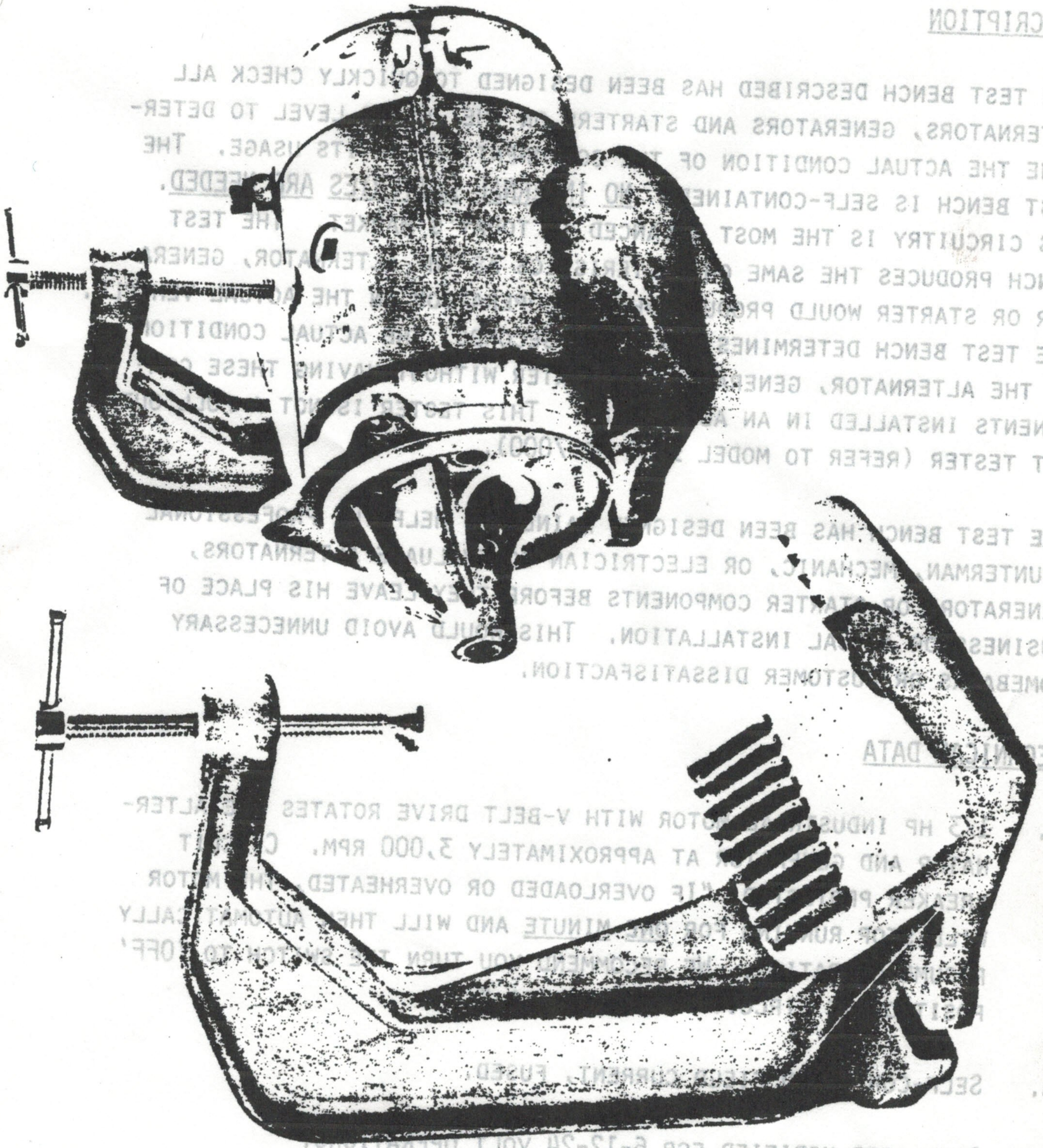

DESCRIPTION

THE TEST BENCH DESCRIBED HAS BEEN DESIGNED TO QUICKLY CHECK ALL ALTERNATORS, GENERATORS AND STARTERS ON THE JOBBER LEVEL TO DETERMINE THE ACTUAL CONDITION OF THE COMPONENT BEFORE ITS USAGE. THE TEST BENCH IS SELF-CONTAINED. NO INTERNAL BATTERIES ARE NEEDED. ITS CIRCUITRY IS THE MOST ADVANCED IN TODAY'S MARKET. THE TEST BENCH PRODUCES THE SAME CHARACTERISTICS AS THE ALTERNATOR, GENERATOR OR STARTER WOULD PRODUCE WHEN IN OPERATION IN THE ACTUAL VEHICLE. THE TEST BENCH DETERMINES, IN A FEW SECONDS, THE ACTUAL CONDITION OF THE ALTERNATOR, GENERATOR OR STARTER WITHOUT HAVING THESE COMPONENTS INSTALLED IN AN AUTOMOBILE. THIS TESTER IS NOT A FULL OUTPUT TESTER (REFER TO MODEL 5000 OR 7000).

THE TEST BENCH HAS BEEN DESIGNED MAINLY TO HELP THE PROFESSIONAL COUNTERMAN, MECHANIC, OR ELECTRICIAN TO EVALUATE ALTERNATORS, GENERATORS OR STARTER COMPONENTS BEFORE THEY LEAVE HIS PLACE OF BUSINESS OR ACTUAL INSTALLATION. THIS WOULD AVOID UNNECESSARY COMEBACKS OR CUSTOMER DISSATISFACTION.

TECHNICAL DATA

A. 1/3 HP INDUSTRIAL MOTOR WITH V-BELT DRIVE ROTATES THE ALTERNATOR AND GENERATOR AT APPROXIMATELY 3,000 RPM. CIRCUIT BREAKER PROTECTED. "IF OVERLOADED OR OVERHEATED, THE MOTOR WILL STOP RUNNING FOR ONE MINUTE AND WILL THEN AUTOMATICALLY RESUME OPERATION. WE RECOMMEND YOU TURN THE SWITCH TO 'OFF' POSITION IF CIRCUIT BREAKER TRIPS."

B. SELF-CONTAINED FIELD CURRENT, FUSED.

C. REGULATOR MODIFIED FOR 6-12-24 VOLT OPERATIONS.

D. HEAVY DUTY STARTER MODULE. 130 AMPS AT 12 VOLTS DC, PROTECTED BY CIRCUIT BREAKER. "IF OVERLOADED OR OVERHEATED, THE MODULE WILL STOP OPERATING FOR ONE MINUTE AND WILL THEN AUTOMATICALLY RESUME OPERATION."

TECHNICAL DATA, CONTINUED

E. HEAVY DUTY VISE WITH HOLD-DOWN PIN.

F. HEAVY DUTY METAL CABINET, REINFORCED.

G. REMOVABLE METER PANEL, STARTER PACK, MOTOR ASSEMBLY FOR EASY SERVICING.

ACCESSORIES

1 INSTRUCTION MANUAL
1 BELT GUARD WITH BELT GUARD COVER
1 FAN BELT
1 WARRANTY CARD
1 SERVICE STATION REPAIR CENTER INFORMATION SHEET
1 QUICK REFERENCE CHART CONNECTION MANUAL 3001-1450

OPERATION

1. MOUNT YOUR ALTERNATOR OR GENERATOR INTO VISE (IF GENERATOR OR STARTER, REMOVE GUIDE PIN FROM THE VISE "V"). USE THE BAR SUPPLIED FOR HOLDING THE ALTERNATORS IN PLACE. USE THE HOLD-DOWN CLAMP FROM THE VISE FOR SECURING ALTERNATOR, GENERATORS OR STARTERS.

2. LINE UP THE PULLEY OF YOUR GENERATOR/ALTERNATOR WITH THE MOTOR PULLEY BY MOVING THE VISE LEFT OR RIGHT. BE SURE THE VISE IS SECURED AFTER ALIGNMENT BY THE HOLD-DOWN SCREWS BEFORE PLACING YOUR V-BELT.

3. ATTACH THE V-BELT TO THE MOTOR AND GENERATOR OR ALTERNATOR BY PUSHING THE VISE FORWARD, THEN RELEASE. THE VISE WILL AUTOMATICALLY TIGHTEN THE V-BELT. MAKE SURE THE BELT IS IN PLACE BY MANUALLY TURNING THE PULLEY BEFORE TURNING ON THE MOTOR.

4. MAKE CONNECTIONS TO ALTERNATOR OR GENERATOR WITH THE TEST LEADS (SEE HARNESS COMING FROM THE FRONT PANEL) BY USING THEM IN THE FOLLOWING SEQUENCE:

   A. GROUND CLIP OF TEST BENCH TO GROUND TERMINAL OR FRAME OF THE ALTERNATOR OR GENERATOR BEING TESTED (MARKED GROUND).

   B. BATTERY CLIP OF TEST BENCH TO BATTERY TERMINAL OF ALTERNATOR/GENERATOR BEING TESTED, ARMATURE OR OUTPUT TERMINAL. (MARKED BATTERY).

   C. THE FIELD TERMINAL IS USED ONLY ON ALTERNATORS WITHOUT AN INTERNAL REGULATOR AND ON ALL GENERATORS. FOR DELCOTRONS WITH THE INTERNAL REGULATOR, DISREGARD THE FIELD CLIP AND USE THE <u>DELCOTRON PLUG</u> OR FOREIGN ALTERNATORS WITH BUILT-IN REGULATORS. <u>FOR DELCOTRONS WITHOUT REGULATOR, USE THE RF PLUG(RELAY-FIELD PLUG)</u>.

NOTE: SELF-EXCITED REGULATORS -- SEE CONNECTIONS PROCEDURE SEPARATELY DESCRIBED IN THIS MANUAL.

   D. CONNECT THE STATOR RELAY LEAD TO THE STATOR RELAY TERMINAL OF THE ALTERNATOR BEING TESTED.

   E. SET UP THE PROGRAM SWITCHES.

      1. ALT OR GEN POSITION, WHICHEVER IS APPLICABLE
      2. A OR B POSITION, WHICHEVER IS APPLICABLE
      3. POS OR NEG POSITION, WHICHEVER IS APPLICABLE
      4. 6 VOLT OR 12-24 VOLT POSITION, WHICHEVER IS APPLICABLE
      5. DEPRESS MOTOR SWITCH IN DESIRED DIRECTION. (PRACTICALLY ALL LATE MODEL ALTERNATORS ROTATE IN A CLOCKWISE POSITION. SOME GENERATORS ROTATE IN A COUNTER-CLOCKWISE POSITION. CHECK YOUR SPECIFICATION BOOK FOR FURTHER DETAILS.

<u>NOTE</u>

CCW OR CW POSITIONS CAN BE USED ON ALL ALTERNATORS <u>NOTE</u> ONLY GENERATORS NEED TO BE TESTED IN DIFFERENT MOTOR POSITIONS.

FIRST TEST (MECHANICAL)

OBSERVE THE NOISE IN A FREE-RUNNING POSITION. ANY MECHANICAL NOISES AUTOMATICALLY DISQUALIFY THE COMPONENT AS A GOOD WORKING COMPONENT -- NO FURTHER TESTING IS RECOMMENDED. AT THIS POINT, THE DEVICE YOU ARE TESTING IS JUST BEING ROTATED WITH NO LOAD APPLIED. THE MOTOR SHOULD START UP QUICKLY AND HUM. IF THE FIRST STEP IS SUCCESSFUL, CONTINUE WITH NUMBER 6 BELOW:

6. WITH THE ALTERNATOR OR GENERATOR IN RUNNING POSITION AND NO MECHANICAL PROBLEMS NOTICED, DEPRESS THE TEST SWITCH -- TOP PORTION FOR ALTERNATORS WITH INTERNAL REGULATORS, DOMESTIC OR FOREIGN -- BOTTOM PORTION FOR ALL OTHER ALTERNATORS OR GENERATORS WITHOUT INTERNAL REGULATORS.

A LOAD IS NOW BEING PLACED ON THE ALTERNATOR OR GENERATOR. THE MOTOR SPEED WILL DROP TO A LOW RPM. THE EFFECT YOU SEE IS THE SAME AS YOU WOULD SEE WHEN THE ALTERNATOR IS IN GOOD CONDITION OPERATING UNDER VEHICLE POWER. IF THE ALTERNATOR OR GENERATOR STALLS OR GREATLY REDUCES THE SPEED OF THE MOTOR, THE ALTERNATOR OR GENERATOR IS PRESUMED DEFECTIVE. WATCH OUTPUT VOLTAGE TO DETERMINE THE FAILURE.

OBSERVE

READ THE VOLTMETER. SINCE ALL ALTERNATORS AND GENERATORS HAVE DIFFERENT CHARACTERISTICS, THE OUTPUT VOLTAGE WILL VARY SLIGHTLY FROM ONE UNIT TO ANOTHER. IN THE BACK OF THIS MANUAL, THAT DATA IS GIVEN TO YOU: PLEASE OBSERVE THE TECHNICAL SPECIFICATIONS.

SIX VOLT UNITS ACCEPT A READING FROM 6 TO 8 VOLTS; 12 AND 24 VOLT UNITS ACCEPT A READING FROM 12 TO 16 VOLTS. WE RECOMMEND THAT YOU TAKE YOUR READING FROM THE QUICK-REFERENCE CHART IN THE BACK OF THE INSTRUCTION MANUAL.

OBSERVE DEFECTIVE ALTERNATOR LAMP FOR THE CONDITION OF THE DIODES AND STATOR FOR ALL ALTERNATORS. AN ALTERNATOR WITH ONE OF THE SIX DIODES OPENED WILL ONLY SHOW A SLIGHT DIFFERENCE IN VOLTAGE. NOTICE THE DEFECTIVE ALTERNATOR LAMP WILL BE ON BRIGHT RED. ON SENSITIVE FIELD TYPE ALTERNATORS, THE DEFECTIVE LAMP MAY FLICKER DUE TO REGULATOR NOISE; BUT IF THE ALTERNATOR HAS AN OPEN OR SHORTED DIODE OR STATOR IMBALANCE, OR ANY COMBINATION, THIS LAMP WILL COME ON AS IT SHOULD -- BRIGHT RED. A MICROPROCESSOR IS COMPUTING THE ACTUAL FAILURE VIA A PRINTED CIRCUIT BOARD WHICH IS CONSTRUCTED WITH A BURNED INTO DUAL VOLTAGE TRACK.

OBSERVE LOAD AND STATOR LAMPS. ANY IRREGULARITIES SUCH AS INDICATOR LIGHTS COMING ON OR VOLTMETER READINGS ARE LOW INDICATES YOU HAVE A DEFECTIVE UNIT ON HAND.

DELCOTRONS WITH INTERNAL REGULATOR

THE DELCOTRON-TYPE OF ALTERNATOR HAS A 1-2 PLUG, WHICH CONNECTS DIRECTLY TO THE TEST BENCH. THE DIODE TRIO LAMP WORKS ONLY WHEN THIS PLUG IS BEING USED. A GOOD DELCOTRON WILL TEST AS FOLLOWS:

MAKING THE CONNECTION WITH THE DELCOTRON PLUG, BATTERY LEAD AND GROUND LEAD, TURN ON THE MOTOR. THIS FUNCTION WILL CAUSE THE DIODE TRIO LAMP TO LIGHT AT MEDIUM BRIGHTNESS. DEPRESSING THE LOAD SWITCH WILL CAUSE THIS LAMP TO MOMENTARILY BRIGHTEN AND THEN COMPLETELY GO OUT. THE METER WILL INDICATE YOUR PROPER VOLTAGE OUTPUT. IF NOTHING HAPPENS WHEN DEPRESSING THE TEST SWITCH (VOLTMETER AT ZERO, DIODE TRIO LAMP ON). THE REGULATOR MAY BE OPENED. BYPASS THE REGULATOR BY PLACING A METAL POINTER IN THE "D" SHAPED HOLE OF THE ALTERNATOR WHILE HOLDING THE LOAD SWITCH. IF THE MOTOR LOADS DOWN AND THE VOLTMETER READS UP-SCALE, THE REGULATOR IS OPENED. IF DEPRESSING THE TEST SWITCH CAUSES THE MOTOR TO LOAD DOWN AND THE VOLTMETER INDICATES LOW VOLTAGE, THE REGULATOR IS SHORTED. THE VOLTMETER INDICATES THE REGULATING VOLTAGE. SEE TEST PROCEDURE ON SELF-EXCITING REGULATORS.

SELF-EXCITING REGULATOR TESTING

OPERATING INSTRUCTIONS

THE 3001 TEST BENCH IS EQUIPPED WITH A SPECIAL LOAD SWITCH, WHICH IS CAPABLE OF OPERATING THE SELF-EXCITING REGULATOR INSTALLED IN DELCOTRON ALTERNATORS. THE TEST PROCEDURE IS AS FOLLOWS:

1. INSTALL THE DELCOTRON ALTERNATOR. HOOK UP THE GROUND LEAD TO GROUND. CONNECT YOUR DELCOTRON PLUG TO THE TWO-PIN HOLE, BETTER KNOWN AS YOUR INTERNAL REGULATOR. THE REGULATOR ONLY FITS ONE WAY. CONNECT YOUR BATTERY LEAD TO THE BATTERY TERMINAL, AND YOUR GROUND LEAD TO GROUND.

2. TEST RESULTS

   A. WHEN CONNECTION OF ALTERNATOR IS COMPLETED, START UP MOTOR.

   B. PRESS UPPER SIDE OF LOAD SWITCH ALTERNATOR WITH INTERNAL REGULATOR. KEEP THUMB ON SWITCH AND OBSERVE READING.

   C. THE VOLTMETER WILL AUTOMATICALLY SHOW OUTPUT VOLTAGE. OBSERVE THE LOAD LAMP. IT SHOULD BE "ON". DIODE TRIO LAMP SHOULD BE "OFF", AND DEFECTIVE ALTERNATOR LIGHT SHOULD BE "OFF". IF THE MOTOR LOADS DOWN WHEN TESTING AN ALTERNATOR DELCOTRON WITH SELF-EXCITING REGULATOR, STOP MOTOR IMMEDIATELY. IF THIS IS HAPPENING THE USUAL CAUSE IS A DEFECTIVE REGULATOR.

CHRYSLER ISOLATED FIELD ALTERNATORS

IT IS COMMON PRACTICE IN WORKING WITH THE TEST BENCH TO GROUND ONE BRUSH ON AN ISOLATED FIELD CHRYSLER ALTERNATOR AND TO USE THE OTHER BRUSH FOR A "B" CIRCUIT FIELD CONNECTION. THIS WORKS FINE 99% OF THE TIME. HOWEVER, IF LUCK IS AGAINST YOU AND IF THE ONE BRUSH YOU HAPPEN TO GROUND WAS ALREADY GROUNDED (INSULATING WASHER IN WRONG OR THE SCREW IS TOO LONG) THE ALTERNATOR WILL TEST GOOD ON THE TEST BENCH BUT IT WILL HAVE A GROUNDED FIELD WHEN INSTALLED ON THE VEHICLE. TO REDUCE THE RISK WHEN USING THIS PROCEDURE, CHECK THE ALTERNATOR TWICE, ALTERNATING THE (HOT) BRUSH EACH TIME.

24 VOLT TEST PROCEDURE

WHEN TESTING 24 VOLT ALTERNATORS OR GENERATORS, USE THE SAME HOOK-UP PROCEDURE AND FOLLOW THE SAME TEST PROCEDURES. WHEN YOU READ THE VOLTAGE OUTPUT, YOU WILL READ ONE-HALF OF THE REGULAR VOLTAGE. THIS IS PROPER FOR A 24 VOLT OPERATION.

GENERATOR TESTING

GENERATORS SHOULD START UP ON THEIR OWN RESIDUAL MAGNETISM. IF A GENERATOR WILL NOT START UP, IT MAY BE NECESSARY TO "POLARIZE" THE UNIT FIRST BEFORE TESTING. IF YOU HAVE PURCHASED THE OPTIONAL STARTER MODULE, YOU NEED ONLY TO CONNECT THE BLACK CABLE TO GROUND AND THE RED CABLE TO THE ARMATURE OF THE GENERATOR AND CONNECT THE FIELD TERMINAL MOMENTARILY TO GROUND IN "A" TYPE GENERATORS OR TO THE ARMATURE IN "B" TYPE GENERATORS.

A WORD OF CAUTION: THE WAY YOU POLARIZE THE GENERATOR WILL DETERMINE THE POLARITY OF THE OUTPUT VOLTAGE WHICH MAY BURN UP YOUR CUSTOMER'S ELECTRICAL SYSTEM. FOR A NEGATIVE GROUND GENERATOR, CONNECT THE BLACK CLAMP TO GROUND OF THE GENERATOR. FOR A POSITIVE GROUND GENERATOR, CONNECT THE RED CLAMP TO GROUND OF THE GENERATOR. THEN, DEPRESS THE STARTER SWITCH A FEW SECONDS. THE GENERATOR SHOULD ROTATE AT THIS TIME. BE SURE THE V-BELT IS OFF FOR THIS PROCEDURE.

STARTER TESTING

YOUR TEST BENCH HAS BEEN PRE-WIRED WITH A STARTER MODULE FOR CONDUCTING A NO-LOAD STARTER FREE SPIN TEST PLUS THE BASIC MECHANICAL OPERATION OF STARTERS. THE STARTER MODULE BOLTS TO THE CHASSIS OF THE TEST BENCH AND PROVIDES A COMPLETE ALTERNATOR-GENERATOR AND STARTER TESTER STATION IN A SMALL AREA. THE STARTER TESTER IS SELF-CONTAINED, MEANING NO EXTERNAL BATTERIES -- THEREFORE ELIMINATING WORRIES ABOUT ACID SPILLS, BATTERY CHARGERS AND HAZARDOUS EXPLOSIVE GASES.

BASICS

DEPRESSING THE STARTER SWITCH APPLIES A 120V AC TO THE MODULE, WHICH IN TURN PRODUCES 12V DC AT THE HEAVY-DUTY BATTERY CLAMPS. BEFORE DEPRESSING THE STARTER SWITCH, THE BATTERY CLAMPS SHOULD BE PROPERLY CONNECTED. IMPORTANT: MAKE SURE CABLES DO NOT TOUCH CASE OR GROUND OF STARTER. THIS WILL PRODUCE HEAVY ARCING, AND WOULD RESULT IN SHORTING THE DIODE OF THE MODULE. WHEN DEPRESSING THE STARTER SWITCH, THE LINE VOLTAGE WILL BE DISCONNECTED ELECTRONICALLY FROM THE MOTOR AND SUPPLIES VOLTAGE ONLY TO THE STARTER MODULE TO PREVENT SIMULTANEOUS OPERATION AND FUSE-BLOWING.

IMPORTANT: DO NOT USE AN EXTENSION CORD.

OPERATION

1. MOUNT STARTER INTO THE MAIN VISE. REMEMBER TO REMOVE THE GUIDE PIN.
2. CONNECT THE BLACK NEGATIVE BATTERY CLAMP TO A GOOD GROUND CONNECTION ON STARTER. (SOME STARTERS HAVE AN ISOLATED TERMINAL FOR GROUND.) MAKE SURE GROUND LEAD DOES NOT TOUCH CASE OF TESTER OR CASE OF STARTER.
3. CONNECT THE RED POSITIVE BATTERY CLAMP LEAD TO THE BATTERY POST OF THE STARTER. AGAIN, WATCH OUT NOT TO TOUCH THE CASE OR STARTER CASE. YOU COULD WELD THE ALLIGATOR CLIP TO THE STARTER HOUSING IF NOT CAREFUL. END RESULT: YOU BYPASS THE FUSE AND SHORT A DIODE.

4. FOR SOLENOID EQUIPPED STARTERS, SEE CONNECTION PROCEDURE ON FOLLOWING PAGES.

THE STARTER TESTER IS ESSENTIALLY A 12 VOLT SUPPLY. MOST 12 VOLT APPLIANCES MAY BE TESTED FOR THEIR OPERATION -- LAMPS, FAN MOTORS, SOLENOIDS, CORES, ETC., ETC. INITIAL AMPERAGE SURGE - 130 AMPS.

<u>DO NOT ATTEMPT BATTERY CHARGING WITH THE STARTER TESTER</u>.

DO NOT BYPASS OR CLAMP DOWN THE STARTER CONTROL SWITCH. THE MODULE IS DESIGNED TO PRODUCE LARGE AMOUNTS OF CURRENT FOR A SHORT PERIOD OF TIME. ANY OTHER USE MAY CAUSE DAMAGE TO THE COMPONENT OR TO THE STARTER MODULE. IF OVERLOADED, AN AUTOMATIC CIRCUIT BREAKER WILL TRIP AND RESET IN APPROXIMATELY ONE MINUTE.

SOLENOID TEST

WHEN MAKING A SOLENOID TEST, IT IS IMPORTANT THAT YOU FOLLOW THESE INSTRUCTIONS:

A. THE STARTER MODULE IS EQUIPPED WITH THE FOLLOWING CONNECTIONS: TWO BIG BATTERY CLAMPS (POSITIVE AND NEGATIVE) AND TWO SMALL BATTERY CLAMPS (POSITIVE AND NEGATIVE).

B. CONNECT THE BIG BLACK ALLIGATOR CLAMP TO THE STARTER HOUSING BEING TESTED. CONNECT THE BIG RED ALLIGATOR CLAMP TO MIDDLE CONNECTION BATTERY TERMINAL OF SOLENOID. SEE DIAGRAM.

C. CONNECT SMALL RED CLIP TO IGNITION SIDE OF SOLENOID, USUALLY MARKED (IGN). CONNECT SMALL BLACK CLIP TO GROUND SIDE OF SOLENOID, OPPOSITE OF (IGN).

D. PRESS STARTER MODULE SWITCH -- OBSERVE READING. THE READING SEEN IS TESTING A STARTER AT A FREE SPIN WITH SOLENOID.

E. IN ORDER TO TEST THE SOLENOID BY ITSELF, REMOVE THE BIG RED ALLIGATOR CLAMP FROM THE SOLENOID. LEAVE EVERYTHING ELSE CONNECTED. PRESS STARTER SWITCH AND THE READING SHOULD NOW BE BETWEEN 47 - 54 AMPS.

NOTE: IF THE RED IGNITION LIGHT STARTS FLICKERING, THE PROBLEM IS YOUR IGNITION POINTS OF THE SOLENOID NOT MAKING CONTACT SUFFICIENTLY.

IMPORTANT - THE IGN TEST LIGHT WILL ONLY COME ON IF YOU CONNECT THE TWO SMALL LEADS TO YOUR SOLENOID AS EXPLAINED.

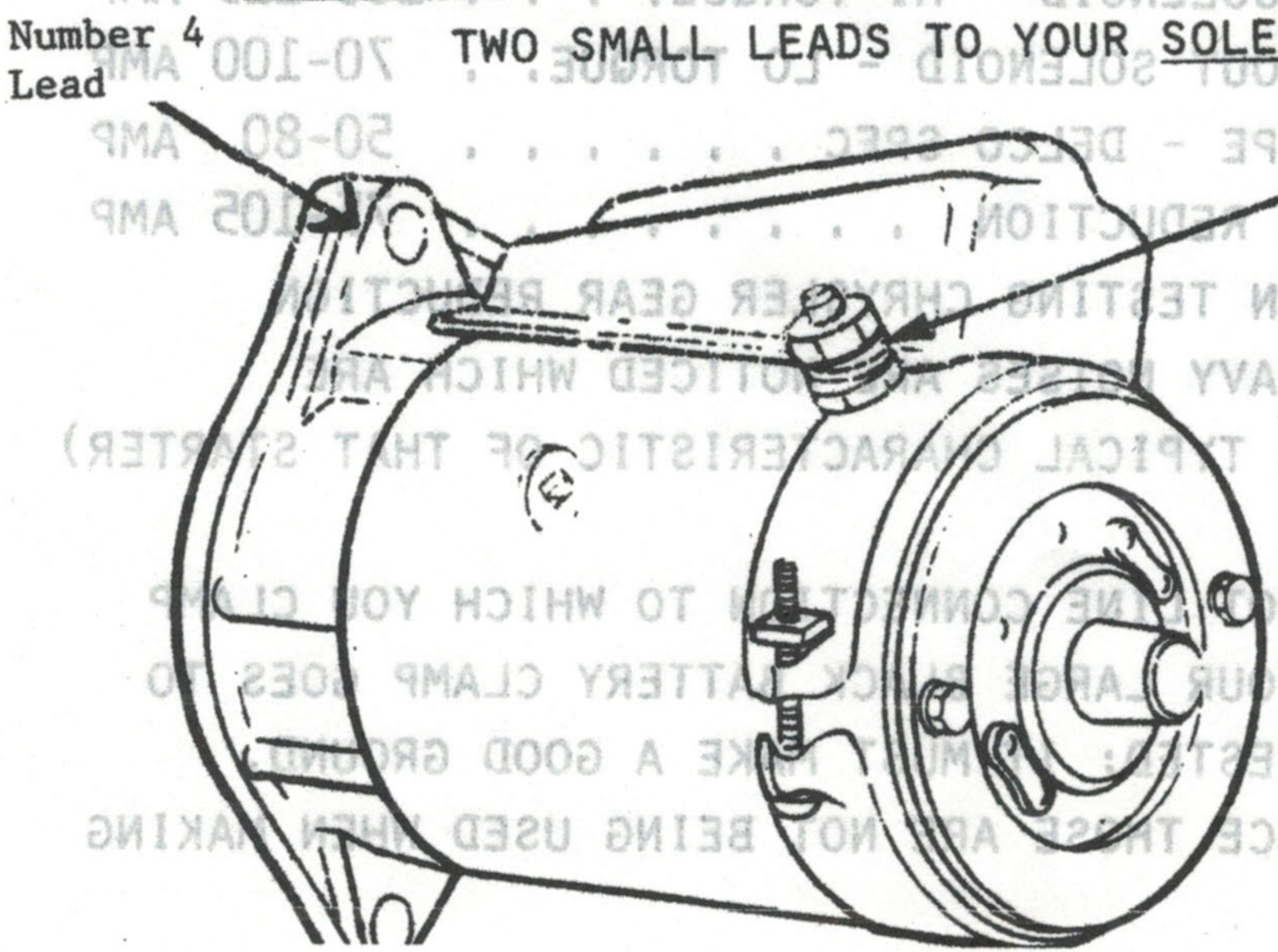

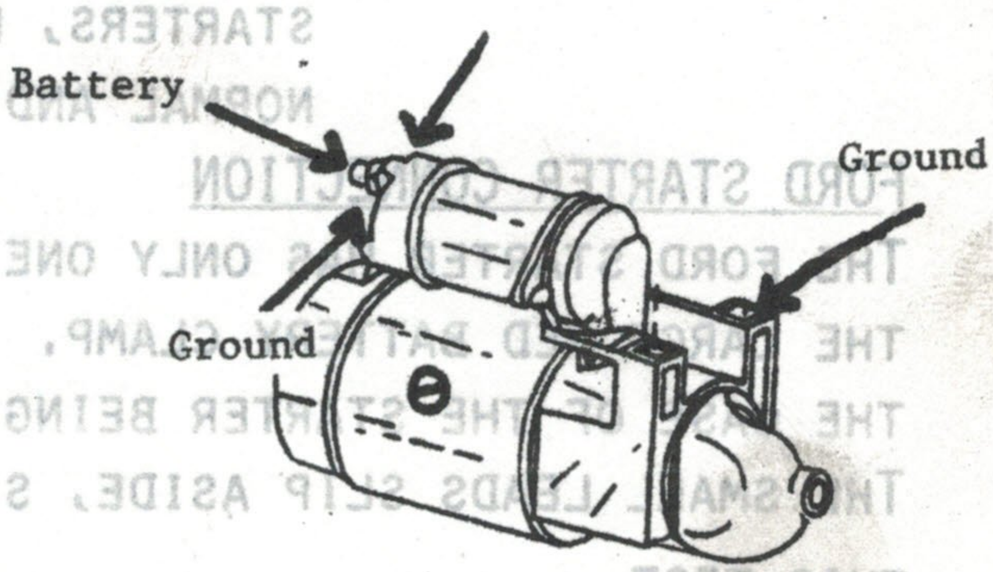

STARTER CONNECTIONS

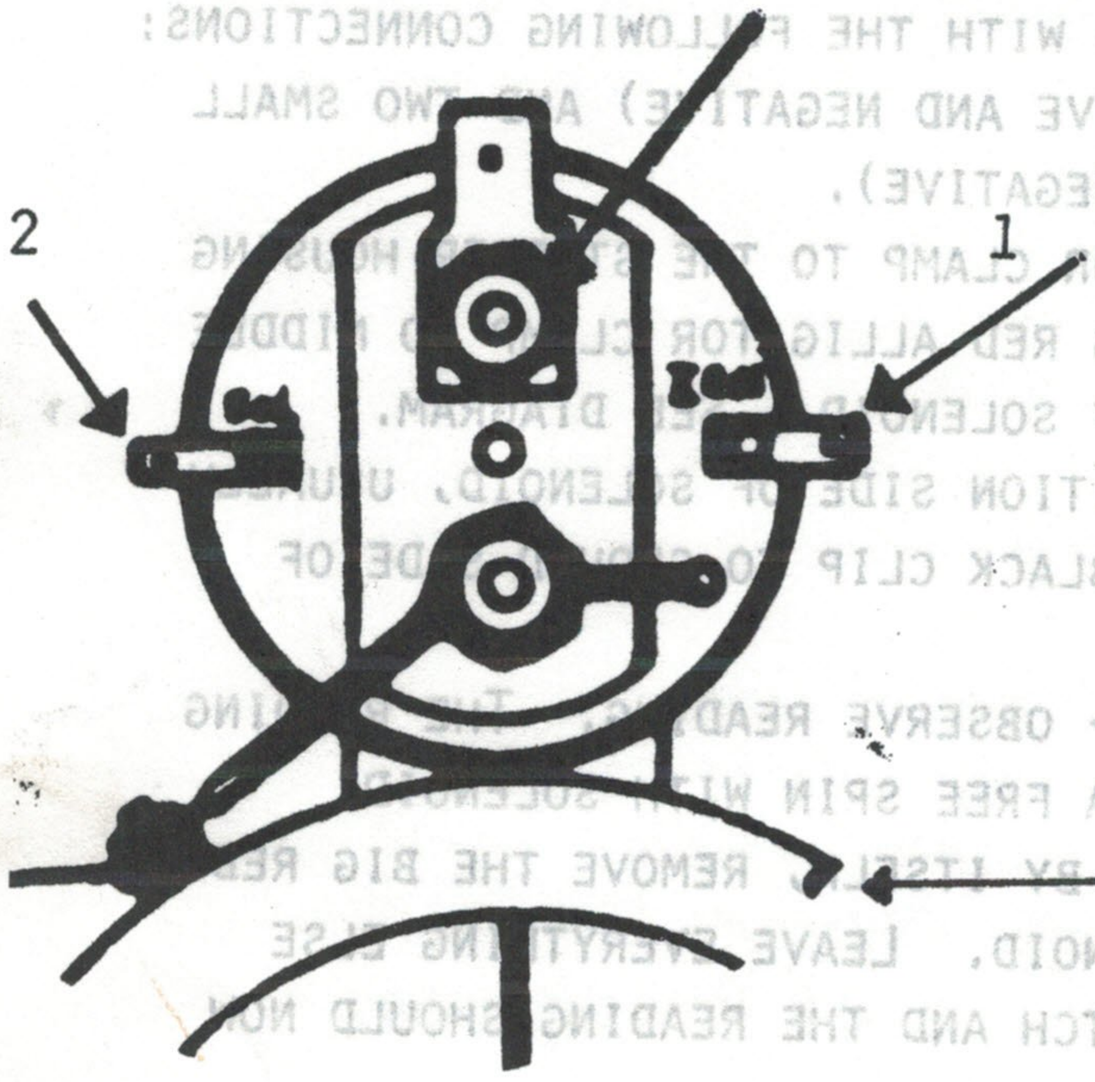

1. SMALL CABLE WITH RED CLIP CONNECTED TO BIG ALLIGATOR BATTERY CLAMP IS YOUR SOLENOID IGN CONNECTION.

2. SMALL BLACK CABLE WITH BLACK CLIP IS YOUR GROUND RELAY CONNECTION. NOTE: BOTH CABLES ARE ONLY USED IF YOU TEST A STARTER WITH SOLENOID.

3. LARGE BATTERY ALLIGATOR CLAMP, RED IN COLOR, CONNECT TO HOT, OR BATTERY TERMINAL OF STARTER BEING TESTED.

4. LARGE BATTERY ALLIGATOR CLAMP, BLACK IN COLOR, CONNECT TO GROUND OF STARTER BEING TESTED.

HINTS: STARTER ARMATURE SHORTS SHOW EXCESSIVE AMP READINGS. DEFECTIVE STARTER DRIVES CHATTER OR WINDING NOISES WILL BE NOTICED.

KNOWN	STARTER TYPE	GOOD
DOMESTIC	DELCO PASS W/SOLENOID - HI TORQUE. . . .	100-125 AMP
STARTER	DELCO PASS W/OUT SOLENOID - LO TORQUE. .	70-100 AMP
SPECIFICATIONS	FORD-DELCO TYPE - DELCO SPEC	50-80 AMP
	CHRYSLER GEAR REDUCTION	75-105 AMP

(REMEMBER WHEN TESTING CHRYSLER GEAR REDUCTION STARTERS, HEAVY NOISES ARE NOTICED WHICH ARE NORMAL AND A TYPICAL CHARACTERISTIC OF THAT STARTER)

FORD STARTER CONNECTION

THE FORD STARTER HAS ONLY ONE HOT LINE CONNECTION TO WHICH YOU CLAMP THE LARGE RED BATTERY CLAMP. YOUR LARGE BLACK BATTERY CLAMP GOES TO THE CASE OF THE STARTER BEING TESTED; IT MUST MAKE A GOOD GROUND. THE SMALL LEADS SLIP ASIDE, SINCE THOSE ARE NOT BEING USED WHEN MAKING THIS TEST.

FORD HIGH TORQUE STARTERS — 120-170 AMPS DEPENDING ON REBUILDERS SPECIFICATION

KNOWN AMPERAGES OF FOREIGN STARTERS

MODEL CAR	SPECIFIED AMPS
ALFA ROMEO	45-50
AUDI	45-50
BMW	45-60
FIAT	45-50
MERCEDES	30-50
OPEL	35-50
PORSCHE	33-50
SAAB	16-25
VW	38-45
VOLVO	40-50
TOYOTA	40-60
DATSUN	40-60

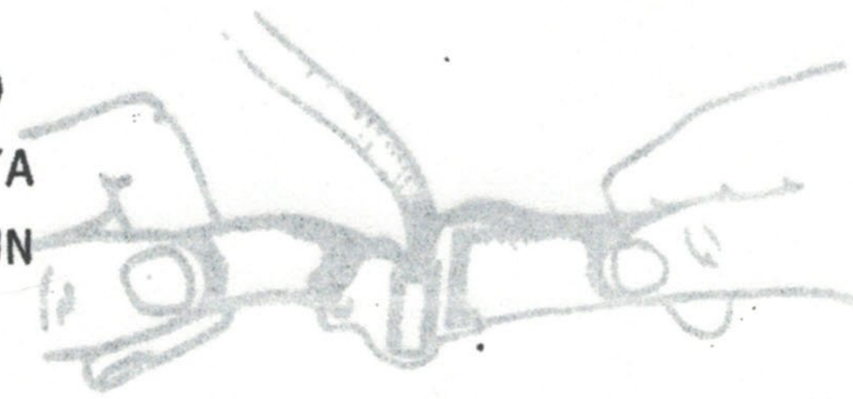



WE ALWAYS RECOMMEND THAT YOU DOUBLE CHECK ALL SPECIFICATIONS GIVEN HERE WITH YOUR UP-TO-DATE MOTOR HANDBOOK OR ANY SPECIFICATION BOOKLET PRINTED BY THE MANUFACTURER.

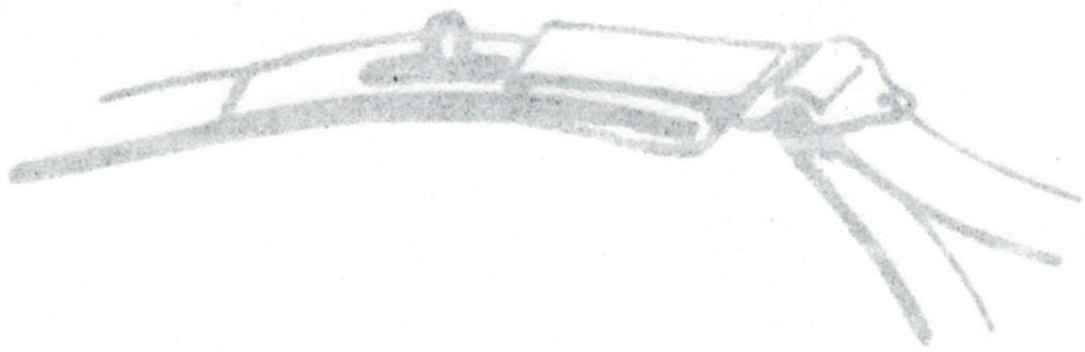

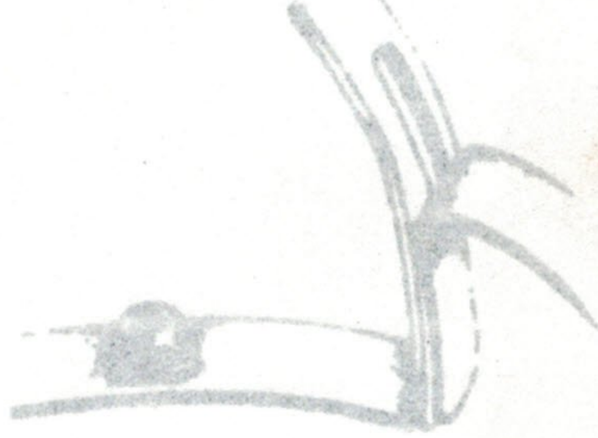

FOR YOUR CONVENIENCE, WE SUPPLY A SECOND VISE WHICH SHOULD ONLY BE USED FOR TESTING STARTER COMPONENTS IF YOU ARE IN A HURRY. THEN, WE RECOMMEND YOU STRAP THESE COMPONENTS DOWN WITH PART NO. 3001-25. DON'T USE THE INEXPENSIVE STRAP SUPPLIED WITH THE TESTER. THE FACTORY HAS MADE AVAILABLE A PROFESSIONAL STARTER VISE. ASK FOR MORE DETAILS ON PART No. 3001-3000.

INSTRUCTIONS ON HOW TO USE PART NO. 3001-25

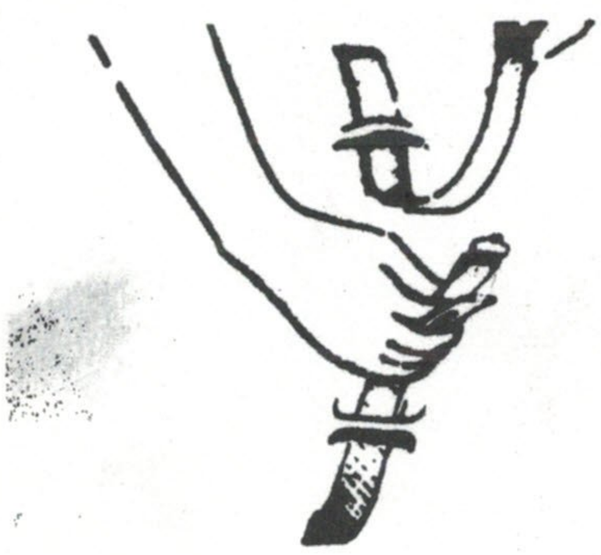

1. INSERT STRAP THROUGH LOOPS ON HOSE.

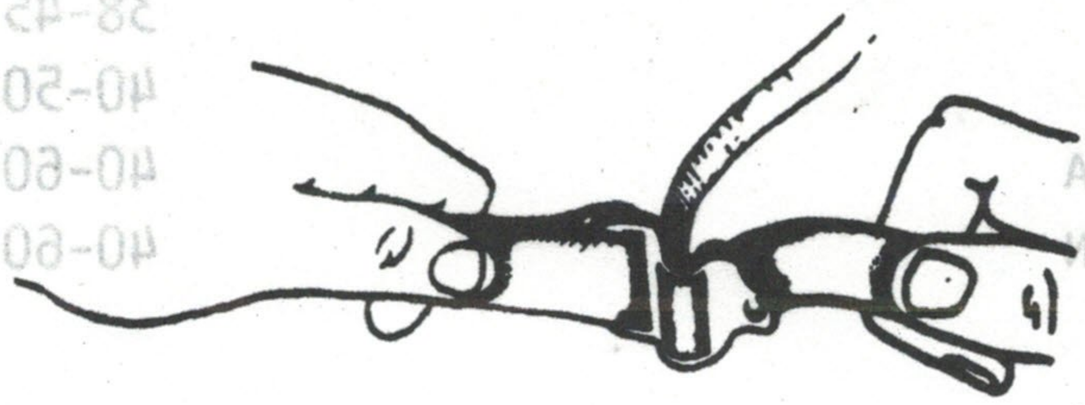

2. THREAD STRAP THROUGH BUCKLE.

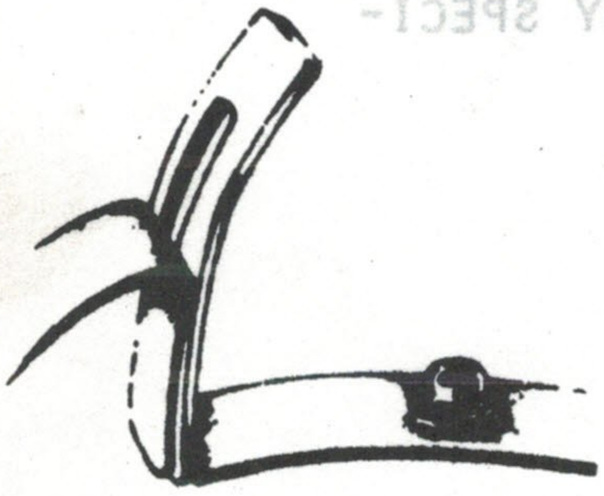

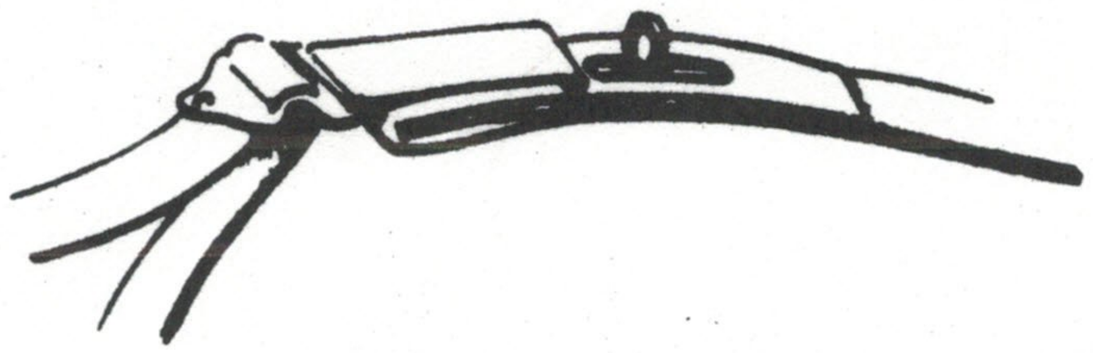

3. FOLD HANDLE OVER FASTENER AND TWIST TO SECURE.