mini tune inc.

AUTOMOTIVE DIAGNOSTIC EQUIPMENT

FULL OUTPUT
GENERATOR - ALTERNATOR - STARTER
TESTBENCH

MODEL 7001

Operation Instructions

Electrical Rebuilder's ERA FOUNDED 2001 ASSOCIATION
#700186

FULL OUTPUT TESTBENCH
3.5 HP - 230V - 50/60 HZ

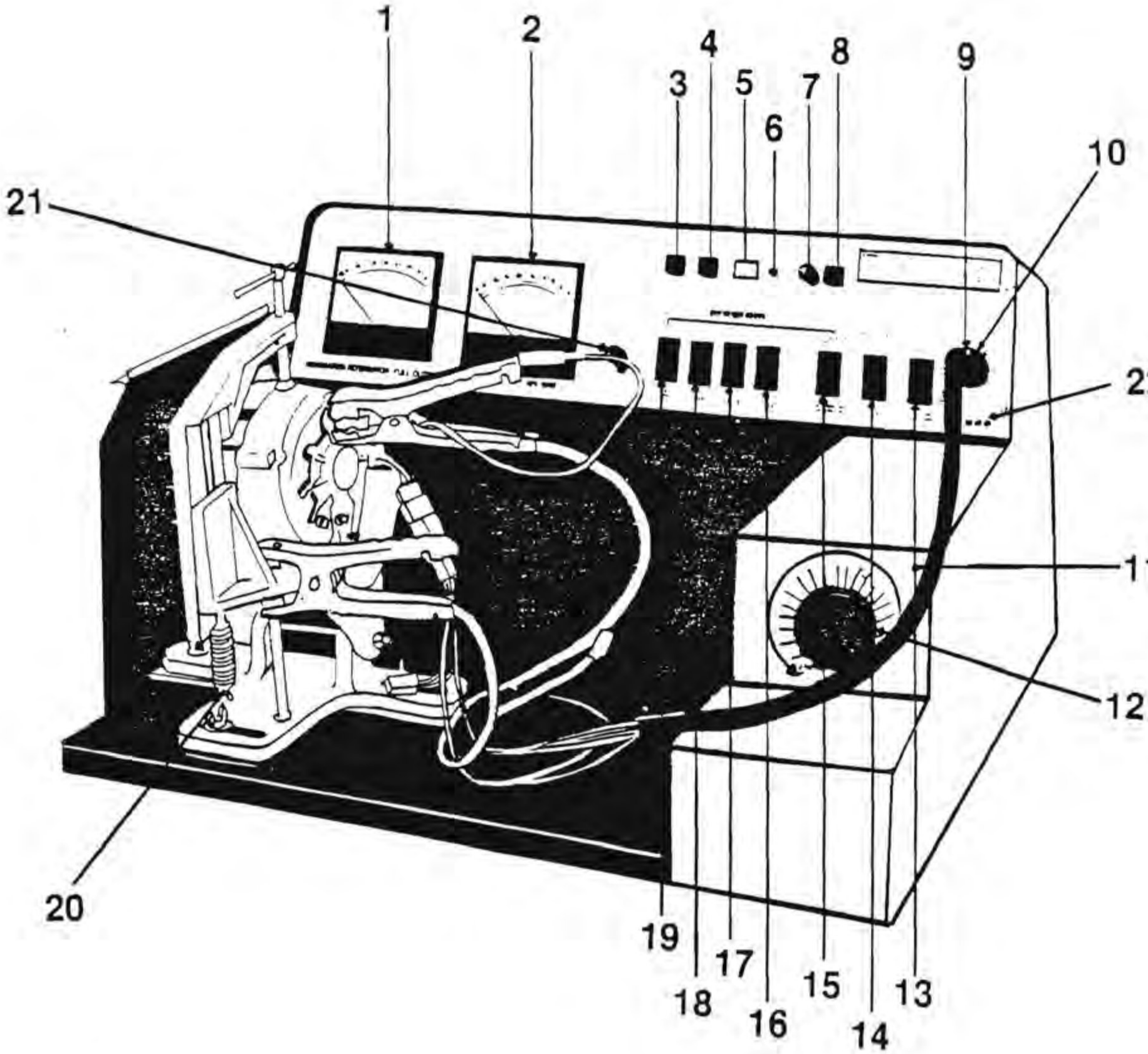

1 - VOLTMETER
2 - AMMETER
3 - LOAD LIGHT
4 - STATOR RELAY LIGHT
5 - DIODE TRIO LIGHT
6 - DEFECTIVE ALTERNATOR LIGHT
7 - LINE FUSE
8 - IGNITION LIGHT
9 - DELCOTRON CABLE
10 - MAIN CONNECTION & HARNESS
11 - LOAD INDICATOR LIGHT
12 - LOAD KNOB
13 - STARTER SWITCH
14 - MOTOR SWITCH
15 - ALTERNATOR WITH INTERNAL REGULATOR SWITCH
16 - 6V OR 12V SYSTEMS
17 - POSITIVE OR NEGATIVE SYSTEMS
18 - A OR B SYSTEMS
19 - ALTERNATOR WITH REGULATOR OR GENERATOR MODE SWITCH
20 - HOLD DOWN VISE
21 - REGULATOR FUSE
22 - OSCILLOSCOPE MODEL 1405 CONNECTION

Electrical Rebuilder's ERA FOUNDED 2001 ASSOCIATION

FEATURES

1. VOLTMETER

THE 0-18V SCALE VOLTMETER, IS USED TO MONITOR THE ALTERNATOR OR GENERATOR'S OUTPUT VOLTAGE WITH OR WITHOUT A LOAD.

2. AMMETER

THE AMMETER HAS TWO SCALES. THE 0-120 SCALE IS TO MONITOR ALTERNATOR AND GENERATOR'S LOAD AMPERAGE. THE 0-200 AMPS SCALE IS TO MONITOR THE STARTER'S FREE SPIN AMPERAGE.

NOTE: BOTH VOLTMETER AND AMMETER MUST BE MONITORED SIMULTANEOUSLY, WHEN LOAD TESTING AN ALTERNATOR OR A GENERATOR.

3. LOAD LIGHT (GREEN)

THIS IS THE LOAD INDICATOR LIGHT AND IT COMES ON IMMEDIATELY UPON STARTING THE DRIVE MOTOR.

4. STATOR RELAY LIGHT (GREEN)

THIS IS THE STATOR OUTPUT INDICATOR LIGHT, AND ONLY WORKS WHEN TESTING AN ALTERNATOR STATOR TERMINAL WHICH IS CONNECTED TO THE STATOR WIRE OF THE TESTBENCH.

5. DIODE TRIO LIGHT (CLEAR)

THE DIODE TRIO LIGHT INDICATES THE CONDITION OF THE DIODE TRIO DEVICE IN A DELCOTRON ALTERNATOR AND SHOULD REMAIN OFF WHEN TESTING A GOOD DELCOTRON ALTERNATOR AND COMES ON WHEN ONE OR MORE OF THE DIODES IN THE DEVICE ARE SHORTED OR OPEN. HOWEVER, THIS LIGHT WILL REMAIN "ON", WHEN TESTING GENERATORS AND ALTERNATORS WITH EXTERNAL REGULATORS.

6. DEFECTIVE ALTERNATOR LIGHT (RED)

THIS IS THE RIPPLE OUTPUT INDICATOR LIGHT THAT COMES ON WHEN YOU HAVE AN ALTERNATOR IMBALANCE PROBLEM, SUCH AS MAIN DIODE, STATOR IMBALANCE, ETC. THIS TYPE OF FAULT USUALLY RESULTS IN A DROP IN THE ALTERNATOR OUTPUT VOLTAGE AND AMPERAGE. IF THE OUTPUT VOLTAGE AND AMPERAGE IS NORMAL, BUT THE LIGHT COMES ON DIM AND FLICKERS, THE ALTERNATOR SHOULD NOT BE REJECTED. THIS EFFECT IS CAUSED BY THE MECHANICAL REGULATOR IN THE BENCH'S ELECTRONIC SYSTEM.

7. LINE FUSE

3/4 AMP LINE PROTECTION FUSE.

8. IGNITION LIGHT (RED)

THIS IS THE SOLENOID COIL WINDING CONTINUITY INDICATOR LIGHT. THIS LIGHT INDICATES WHEN THE IGNITION TESTLEAD IS CONNECTED TO THE STARTER RELAY CONTACT.

Electrical Rebuilder's ERRA FOUNDED 2001 ASSOCIATION

9. DELCOTRON CABLE

THIS CABLE HAS A STANDARD TWO TERMINAL DELCOTRON PLUG AT THE END. THIS IS PLUGGED INTO A DELCOTRON TYPE ALTERNATOR UNDER TEST.

10. MAIN CONNECTION AND HARNESS

THE BLACK HEAVY DUTY WIRE AND CLAMP USED AS GROUND (-) CONNECTION, IS COMMON TO AN ALTERNATOR, GENERATOR OR STARTER TEST.

THE RED HEAVY DUTY CLAMP CAN BE CONNECTED TO THE TESTBENCH ALTERNATOR/ GENERATOR WING NUT TERMINAL, WHEN TESTING ALTERNATORS OR GENERATORS, OR IT CAN BE CONNECTED TO THE STARTER WING NUT TERMINAL FOR STARTER FREE SPIN TESTING.

THE FIELD HAS A GREEN ALLIGATOR CLIP.

THE STATOR HAS A YELLOW ALLIGATOR CLIP.

THE STATOR AND FIELD ARE ALSO TERMINATED INTO THE R-F PLUG. THIS PLUG IS USED ON EARLIER DELCO ALTERNATORS AND LABELED "RELAY TO FIELD PLUG".

11. LOAD INDICATOR LIGHT

THIS LIGHT IS LOCATED ABOVE THE LOAD KNOB AND COMES ON, WHEN THE CARBON PILE IS ENGAGED.

12. LOAD KNOB

A LOAD CAN BE PUT ON THE UNIT BY TURNING THE CARBON PILE KNOB CLOCKWISE SLOWLY TO INCREASE THE LOAD. A MAXIMUM OF 120 AMPS MAY BE INTRODUCED, WHEN TESTING HEAVY DUTY 12V ALTERNATORS.

CAUTION: WHEN INCREASING THE LOAD, DO NOT LET THE VOLTAGE DROP BELOW 13V ON A 12V ALTERNATOR OR GENERATOR, OR BELOW 6.5V ON A 6V UNIT, AS REGULATION CIRCUIT MAY CUT OFF THE FIELD EX-CITATION. IF THIS OCCURS, REMOVE THE CARBON PILE LOAD BY TURNING THE KNOB, COUNTER-CLOCKWISE AND REACTIVATING THE REGULATOR.

13. STARTER SWITCH

MOMENTARY PUSH-ON, THAT TURNS THE STARTER MODULE ON. LET THE METER NEEDLE SWING OUT, THEN STABILIZE. TAKE YOUR READING AND RELEASE THE SWITCH. ALL OF THIS MUST BE DONE IN A MATTER OF SECONDS. READ YOUR STARTER INSTRUCTIONS FOR FURTHER DETAILS.

14. MOTOR SWITCH

THIS IS A THREE POSITION SWITCH. TURN CLOCKWISE OR COUNTER CLOCK-WISE POSITION, WHICHEVER, IS RECOMMENDED BY THE MANUFACTURER. CENTER POSITION IS "OFF".

Electrical Rebuilder's ERA FOUNDED 2001 ASSOCIATION

15. ALTERNATOR/GENERATOR - ALTERNATOR WITH INTERNAL REGULATOR SWITCH

THIS SWITCH IS SET IN ONE OF THE TWO POSITIONS THAT CORRESPONDS WITH THE UNIT UNDER TEST.

16. 6V OR 12V SYSTEMS

THIS SWITCH IS SET TO CORRESPOND WITH THE VOLTAGE OF THE UNIT UNDER TEST.

17. POSITIVE OR NEGATIVE SYSTEMS

SET THIS SWITCH TO CORRESPOND WITH THE UNIT UNDER TEST. "NEGATIVE" FOR THE NEGATIVE GROUND SYSTEM, "POSITIVE" FOR THE POSITIVE GROUND SYSTEM.

18. A OR B SYSTEMS

"A" CIRCUIT GENERATORS ARE THOSE WHERE THE FIELD CURRENT IS SUPPLIED FROM THE ARMATURE TERMINAL, INSIDE THE GENERATOR AND THE FIELD COILS ARE GROUNDED THROUGH THE REGULATOR.

"B" CIRCUIT GENERATORS ARE THOSE WHERE THE FIELD CURRENT IS SUPPLIED FROM THE REGULATOR AND THE FIELD COILS ARE GROUNDED INSIDE THE GENERATOR.

"A" CIRCUIT ALTERNATORS ARE THOSE WHERE THE FIELD CURRENT IS SUPPLIED FROM THE BATTERY TERMINAL INSIDE THE ALTERNATOR AND THE ROTOR (FIELD COIL), IS GROUNDED THROUGH THE INTERNAL REGULATO

"B" CIRCUIT ALTERNATORS ARE THOSE WHERE THE FIELD CURRENT IS SUPPLIED FROM THE EXTERNAL REGULATOR AND THE ROTOR (FIELD COIL) IS GROUNDED INSIDE THE ALTERNATOR.

ISOLATED FIELD ALTERNATORS (CHRYSLER 2 FIELD TERMINALS) ARE ALTERNATORS WHERE THE FIELD CURRENT IS SUPPLIED FROM THE IGNITION RESISTOR AND THE ROTOR (FIELD COIL) IS GROUNDED THROUGH THE EXTERNAL ELECTRONIC REGULATOR.

19. ALTERNATOR WITH REGULATOR OR GENERATOR MODE SWITCH

SET THIS SWITCH TO CORRESPOND WITH THE UNIT UNDER TEST.

20. HOLD DOWN VISE

USE THIS VISE TO CLAMP DOWN THE ALTERNATOR, GENERATOR OR STARTER. THEN PROPERLY ALIGN THE COMPONENT ALTERNATOR, GENERATOR OR STARTER, TO AVOID THE ACCIDENTAL SLIPPING OF THE DRIVE BELT. TURN THE PULLEY BY HAND FIRST, TO MAKE SURE THE BELT IS ON THE PULLEY TRACK. FURTHER TENSION MAY BE APPLIED BY ENGAGING THE ALTERNATOR TENSION BRACKET.

21. REGULATOR FUSE

REGULATOR CONTACT PROTECTION.

Electrical Rebuilder's ERA FOUNDED 2001 ASSOCIATION

22. OSCILLOSCOPE

EVERY FULL OUTPUT TESTBENCH IS EQUIPPED WITH A THREE HOOK-UP CONNECTION FOR AN OSCILLOSCOPE ON THE PANEL. THE HOOK-UPS ARE FOR GROUND, INTERNAL FIELD OR EXTERNAL FIELD. AN OSCILLOSCOPE MAY BE CONNECTED TO THESE OUTLETS. NOTE: AN OSCILLOSCOPE IS OPTIONAL. ORDER #1450 IF YOU WISH TO HAVE AN OSCILLOSCOPE.

INTRODUCTION

THIS TESTBENCH IS THE MOST COMPACT TESTBENCH OF ITS KIND. IT IS EQUIPPED WITH A 230V AND A 3.5 HP, 50/60 HZ, HEAVY DUTY REVERSIBLE DRIVE MOTOR.

IT WAS DESIGNED WITH THE REBUILDER IN MIND, SO HE COULD TEST AND ANALYZE 6 AND 12 VOLT ALTERNATORS OR GENERATORS AT FULL LOAD, UP TO 120 AMPS WITH NO EXTERNAL BATTERIES NEEDED.

THE INSTRUMENT AND CONTROL PANEL ARE MOUNTED AT A PROPER ANGLE IN FRONT OF THE OPERATOR FOR EASY ACCESS TO CONTROL SWITCHES AND WITH FULL VISUAL CONTACT. IT HAS TWO LARGE FIVE INCH D'ARSONVAL METERS, FOR SIMULTANEOUS VOLTS AND AMPS MONITORING, AS WELL AS ALL INDICATOR LIGHTS.

THE PANEL INCORPORATES ALL THE NECESSARY SWITCHES, SUCH AS THE ALTERNATOR/GENERATOR TYPE, A OR B SYSTEMS, POSITIVE OR NEGATIVE TYPE, AND THE 6 OR 12 VOLT SYSTEMS.

THE BENCH IS EQUIPPED WITH A COMBINATION VARIABLE LOAD, SWITCH AND AN INDICATOR LIGHT, INSIDE A COMPACT SIDE CONSOLE.

A SIMPLE PLUG-IN HARNESS, INCLUDES ALL THE NECESSARY WIRES AND CLIPS FOR CONNECTING THE VARIOUS ALTERNATORS. TWO HEAVY DUTY WIRES WITH RED CLAMPS FOR THE POSITIVE (+) AND BLACK CLAMPS FOR THE NEGATIVE (-), ARE PROVIDED FOR THE ALTERNATOR OUTPUT CONNECTIONS. THE POSITIVE LEAD MAY BE SWITCHED TO THE 12V STARTER POWER SUPPLY WING NUT TERMINAL FOR A STARTER TEST. THE BLACK CLAMP WIRE IS COMMON TO BOTH ALTERNATOR/GENERATOR AND STARTER.

SPECIFICATIONS

DRIVE MOTOR

230V SINGLE PHASE, 3.5HP, 50/60HZ, WITH THERMAL OVERLOAD PROTECTION, REVERSIBLE 3850 RPM MOTOR, WITH THREE STEP PULLEYS FOR VARIOUS SELECTABLE SPEEDS.

WHEN TESTING AN ALTERNATOR WITH 1 3/4 INCH PULLEY, THE SPEEDS ARE: SMALL STEP - 2760 RPM; MEDIUM STEP - 3950 RPM; AND LARGE STEP - 5915 RPM.

VOLTMETER

FIVE INCH D'ARSONVAL METER WITH 0-18 VOLTS, 1% METER SCALE.

Electrical Rebuilder's ERA FOUNDED 2001 ASSOCIATION

(SPECIFICATIONS CON'T)

AMMETER

FIVE INCH D'ARSONVAL METER WITH TWO SCALES, 0-120 AMPS, 1% ACCURACY FOR ALTERNATOR/GENERATOR LOAD AMPERAGE READING, AND 0-200 AMPS, 1% ACCURACY FOR STARTER FREE SPIN AMPERAGE DRAW READING.

VOLTAGE REGULATOR

BUILT-IN, 6 AND 12 VOLTS. THIS VOLTAGE REGULATOR IS A STANDARD VOLTAGE REGULATOR AND SHOULD BE CLEANED ONCE A YEAR.

LOAD

THE VARIABLE LOAD, CONSISTS OF VERY FINE CARBON PLATES WITH 500 AMP CAPABILITIES, WHICH IS ADJUSTABLE FROM 7 TO 120 AMPS.

CONTROL SWITCHES

ALTERNATOR/GENERATOR, TYPE A/B, POSITIVE/NEGATIVE, 6v-12v ALTERNATOR WITH REGULATOR/ALTERNATOR GENERATOR.

MOTOR SWITCH

THREE POSITIONS: - CENTER POSITION IS OFF, UP POSITION IS CLOCKWISE, AND DOWN IS COUNTER CLOCKWISE.

STARTER SWITCH

MOMENTARY PUSH ON,THAT TURNS THE STARTER MODULE ON AND SWITCHES THE AMMETER TO READ 0-200 AMPS.

INDICATOR LIGHTS

LOAD ON - ALTERNATOR/GENERATOR OUTPUT INDICATOR

STATOR RELAY

STATOR OUTPUT INDICATOR

DIODE TRIO

DELCOTRON DIODE TRIO SHORT/OPEN INDICATOR. DEFECTIVE ALTERNATOR - RIPPLE OUTPUT LEVEL INDICATOR. IGNITION ON - STARTER SOLENOID COIL CONTINUITY INDICATOR.

REGULATOR FUSE

10 AMPS FOR INTERNAL VOLTAGE REGULATOR CONTACT PROTECTION

LINE FUSE

3/4 AMPS FOR THE FIELD POWER SUPPLY TRANSFORMER PROTECTION.

STARTER MODULE

HEAVY DUTY 12 VOLTS AT 130 AMPS, PROTECTED BY A CIRCUIT BREAKER. IN CASE OF OVERLOAD, DUE TO ACCIDENTAL SHORTING OF THE CLAMPS OR SHORTED STARTER, THE MODULE WILL TURN OFF FOR ONE MINUTE AND RESET AUTOMATICALLY.

Electrical Rebuilder's ERA FOUNDED 2001 ASSOCIATION

PREPARATION FOR USE

1. THE TESTBENCH COMES EQUIPPED WITH A HEAVY DUTY THREE WIRE POWER LINE CORD, (ACTUAL WALL PLUG IS NOT SUPPLIED). CONNECT ANY 230V, 50/60 HZ, THREE PRONG POWER PLUG THAT IS STANDARD IN YOUR LOCATION. MAKE CERTAIN THAT THE NEUTRAL THIRD WIRE OF THE RECEPTACLE THAT YOU USE IS WELL GROUNDED. ALSO, GROUND THE TESTBENCH CASE OR BASE FROM A RELIABLE GROUND SOURCE. ALTHOUGH THE DRIVE MOTOR HAS A BUILT-IN THERMAL CIRCUIT BREAKER, IT IS RECOMMENDED THAT THE RECEPTABLE BE POWERED THROUGH A 15 AMP - 25 AMP CIRCUIT BREAKER, PROVIDED NO OTHER EQUIPMENT IS POWERED THROUGH THE SAME LINE.

ALTERNATOR TEST PROCEDURE

1.0 THE FOLLOWING GENERAL TEST PROCEDURE STEPS ARE FOR ALL ALTERNATORS. DURING EACH STEP, THE VARIOUS TYPES ARE SPECIFIED AND THE CORRESPONDING VARIATION IN THE PROGRAM SWITCHING ARE DESCRIBED.

1.1 BEFORE SETTING UP AN ALTERNATOR FOR TEST, MAKE SURE THAT THE "MOTOR POWER" SWITCH #14 IS IN THE CENTER (OFF) POSITION AND THE LOAD KNOB #12 IS TURNED TO ITS EXTREME COUNTER CLOCKWISE DIRECTION.

1.2 LIFT THE BELT GUARD TO THE SIDE AND LOOSEN THE VISE HOLD DOWN BOLT. HOLD THE ALTERNATOR TO BE TESTED IN A POSITION SO THAT ITS MOUNTING HOLE IS IN ALIGNMENT WITH THE VISE MOUNTING ROD AND SLIDE IT IN UNTIL THE ALTERNATOR PULLEY IS IN LINE WITH THE STEP PULLEY. TIGHTEN THE UNIT SECURELY IN THE VISE. SWING THE VISE TOWARDS THE DRIVE MOTOR AND HOLD. PLACE THE DRIVE BELT AROUND THE PULLEY, RELEASE THE VISE AND PLACE THE BELT GUARD BACK INTO POSITION OVER THE BELT.

Electrical Rebuilder's ERA FOUNDED 2001 ASSOCIATION

(ALTERNATOR TEST PROCEDURE CON'T)

1.3 CLAMP THE COMMON MINUS (-) GROUND CABLE TO A SUITABLE PART OF THE ALTERNATOR CASE. CLAMP THE POSITIVE (+) CABLE FROM THE ALTERNATOR/GENERATOR TERMINAL OF THE BENCH TO THE POSITIVE (+) OUTPUT TERMINAL OF THE ALTERNATOR.

1.4 CONNECTING THE HARNESS

A. IF THE ALTERNATOR UNDER TEST IS A DELCOTRON TYPE, WITH A BUILT-IN REGULATOR, IT IS ONLY NECESSARY TO CONNECT THE DELCOTRON PLUG FROM THE BENCH INTO ITS MATING RECEPTACLE OF THE ALTERNATOR.

B. IF THE ALTERNATOR UNDER TEST IS THE TYPE WITH EXTERNAL REGULATOR, CONNECT THE FIELD WIRE (GREEN ALLIGATOR CLIP), FROM THE BENCH TO THE FIELD TERMINAL OF THE ALTERNATOR. IF THE ALTERNATOR HAS A STATOR TERMINAL, CONNECT IT TO THE STATOR WIRE (YELLOW ALLIGATOR CLIP).

C. IF THE ALTERNATOR HAS A R-F (RELAY TO FIELD) RECEPTACLE, USE THE R-F MATING PLUG TERMINAL AT THE END OF THE HARNESS, (THIS R-F PLUG IS CONNECTED TO THE FIELD AND STATOR WIRES FROM THE HARNESS).

D. IF THE ALTERNATOR HAS TWO FIELD TERMINALS, CONNECT THE FIELD WIRE (GREEN ALLIGATOR CLIP) TO ONE, AND CONNECT THE OTHER TERMINAL TO GROUND VIA THE SMALL ALLIGATOR CLIP WIRE FROM THE BLACK MINUS (-) CLAMP.

E. OTHER ALTERNATORS (REFER TO THE ALTERNATOR/GENERATOR DRAWINGS). THE HARNESS HAS ALL THE NECESSARY CONNECTING WIRES FROM THE BENCH. IN ADDITION A COMPLETE SET OF WIRED ADAPTER PLUGS ARE SUPPLIED WITH THE BENCH. BY LOOKING UP THE ALTERNATOR TO BE TESTED, ONE CAN MATCH AND CONNECT THE APPROPRIATE ADAPTER. ONCE THE ALTERNATOR IS SECURED IN THE VISE AND PROPERLY CONNECTED TO THE BENCH, SET THE CONTROL PANEL SWITCHES AS FOLLOWS:

1.5 SETTING THE CONTROL PANEL SWITCHES

A. SET THE ALTERNATOR/GENERATOR TYPE SWITCH #19 TO CORRESPOND TO THE UNIT BEING TESTED.

B. SET THE A-B SYSTEM SWITCH #18 TO "A" OR "B". IF YOU ARE NOT SURE, TRY POSITION "A", IF THERE IS NO OUTPUT, SWITCH TO "B" POSITION.

C. SET POSITIVE-NEGATIVE SYSTEM SWITCH #17 TO "POS" FOR POSITIVE GROUND SYSTEM, OR TO "NEG" FOR NEGATIVE GROUND SYSTEM. (ALL NEWER ALTERNATOR/GENERATOR TYPES ARE NEGATIVE GROUND)

Electrical Rebuilder's ERA FOUNDED 2001 ASSOCIATION

(SETTING THE CONTROL PANEL SWITCHES CON'T)

D. SET THE 12v OR 6v SWITCH #16 TO THE VOLTAGE OUTPUT OF THE UNIT UNDER TEST. (ALL NEWER ALTERNATOR/GENERATORS ARE OF THE 12 VOLT TYPE).

E. SET THE ALTERNATOR WITH REGULATOR OR ALTERNATOR/GENERATOR SWITCH #15 TO THE POSITION THAT WILL CORRESPOND TO THE TYPE OF UNIT UNDER TEST. IN THE "ALT/GEN" POSITION, THE TESTBENCH VOLTAGE REGULATOR REGULATES THE VOLTAGE AT APPROXIMATELY 14 VOLTS. IN THE "ALT WITH REG" POSITION, THE INTERNAL REGULATOR OF THE UNIT UNDER TEST REGULATES THE OUTPUT VOLTAGE.

ONCE THE PROGRAM SWITCHES ARE SET TO CORRESPOND TO THE UNIT UNDER TEST, CONTINUE AS FOLLOWS:

1.6 -TURN THE DRIVE MOTOR SWITCH ON FOR CW ROTATION AND OBSERVE THE CONTROL PANEL.

A. THE VOLTMETER #1 SHOULD READ ABOUT 14 VOLTS.

B. THE "LOAD" LIGHT #3 (GREEN) SHOULD COME ON.

C. THE "STATOR" LIGHT #4 (GREEN) WILL COME ON, ONLY IF THE ALTERNATOR UNDER TEST HAS A STATOR TERMINAL AND IS CONNECTED TO THE STATOR WIRE FROM THE HARNESS.

D. THE "DIODE TRIO" LIGHT (CLEAR) INDICATES THE CONDITION OF THE DIODE TRIO (THREE DIODES) INSIDE A DELCOTRON TYPE ALTERNATOR. THIS LIGHT SHOULD STAY OFF DURING A LOAD TEST IN A GOOD ALTERNATOR, BUT WILL REMAIN ON, IF ONE OR MORE OF THE THREE DIODES ARE DEFECTIVE.

E. THE "DEFECTIVE ALTERNATOR" LIGHT #6 SHOULD REMAIN OFF DURING A LOAD TEST OF A GOOD ALTERNATOR. WHEN THIS LIGHT STAYS ON DURING THE TEST, IT INDICATES THE PRESENCE OF HIGH RIPPLE AT THE OUTPUT OF THE ALTERNATOR. THIS IS DUE TO ONE ORE MORE DEFECTIVE OUTPUT DIODES OR STATOR IMBALANCE. THIS TYPE OF FAULT USUALLY RESULTS IN A DROP IN THE ALTERNATOR OUTPUT VOLTAGE AND AMPERAGE.

NOTE: IN SOME ALTERNATORS, SUCH AS THE MONO PHASE TYPE, IF THE OUTPUT VOLTAGE AND AMPERAGE IS NORMAL, BUT THE LIGHT COMES ON DIM OR FLICKERS, THE ALTERNATOR SHOULD NOT BE REJECTED. PLEASE SEE TEST PROCEDURE FOR MONO PHASE ALTERNATORS.

UP TO THIS POINT, IF THE OUTPUT VOLTAGE AND INDICATORS PROVE THE UNIT UNDER TEST TO BE NORMAL, PROCEED WITH THE FULL OUTPUT LOAD TEST AS FOLLOWS:

Electrical Rebuilder's ERA FOUNDED 2001 ASSOCIATION

1.7 FULL OUTPUT LOAD TEST

A. TURN THE LOAD KNOB #12 SLOWLY CLOCKWISE, WHILE OBSERVING THE VOLTMETER AND AMMETER SIMULTANEOUSLY AND ADJUST THE LOAD UNTIL THE OUTPUT VOLTAGE DROPS TO 13 VOLTS. AT THIS TIME, NOTE THE AMPERAGE READING ON THE AMMETER. THIS AMPERAGE READING IS THE FULL LOAD OUTPUT OF THE ALTERNATOR/GENERATOR UNDER TEST. IF LOW, TEST THE UNIT AT A HIGHER SPEED.

B. WHEN THE TEST IS COMPLETED, TURN THE LOAD KNOB TO ITS EXTREME CCW DIRECTION. TURN THE DRIVE MOTOR SWITCH TO OFF AND REMOVE THE UNIT FROM THE VISE.

STARTER TESTING

IMPORTANT: WHEN TESTING A STARTER ON THE FULL OUTPUT TESTBENCH, USE THE GENERATOR/ALTERNATOR VISE. REMOVE THE GUIDE PIN AND PLACE THE STARTER ONTO THE VISE BED.

STEP 1

REMOVE THE ALTERNATOR GUIDE PIN.

STEP 2

PLACE THE STARTER ONTO THE VISE WITH THE GEARS FACING TOWARDS THE GENERATOR/ALTERNATOR CASE, TO AVOID BODILY INJURY.

STEP 3

LIGHTLY TIGHTEN THE STARTER WITH THE HOLD-DOWN SCREW. DO NOT OVER TIGHTEN.

STEP 4

PLACE THE CABLES ONTO THE STARTER AS DESCRIBED IN THE INSTRUCTION SECTION.

BASICS

DEPRESSING THE STARTER SWITCH, APPLIES AN 120V AC TO THE MODULE, WHICH IN TURN PRODUCES 12V DC AT THE HEAVY DUTY BATTERY CLAMPS. BEFORE DEPRESSING THE STARTER SWITCH, THE BATTERY CLAMPS SHOULD BE PROPERLY CONNECTED. IMPORTANT: MAKE SURE THE CABLES DO NOT TOUCH THE CASE OR THE GROUND OF THE STARTER. THIS WILL PRODUCE HEAVY ARCING, AND WOULD RESULT IN SHORTING THE DIODE OF THE MODULE. WHEN DEPRESSING THE STARTER SWITCH, THE LINE VOLTAGE WILL BE DISCONNECTED ELECTRICALLY FROM THE MOTOR AND SUPPLIES THE NEEDED VOLTAGE THAT THE STARTER REQUIRES TO OPERATE UNDER A CRANKING CONDITION.

A DEFECTIVE STARTER SHOULD NOT BE TESTED OVER AGAIN (TEST REPEATED) TO AVOID CIRCUIT BREAKER TRIPPING. IF YOU TEST A DEFECTIVE STARTER, AND THE AMP READING PECKS THE 200 MARK, DO NOT REPEAT THE TEST.

Electrical Era Rebuilder's ERA FOUNDED 2001 ASSOCIATION

OPERATION

1. MOUNT THE STARTER INTO THE MAIN VISE. REMEMBER TO REMOVE THE GUIDE PIN.

2. CONNECT THE BLACK NEGATIVE BATTERY CLAMP TO A GOOD GROUND CONNECTION ON THE STARTER. (SOME STARTERS HAVE AN ISOLATED TERMINAL FOR THE GROUND). MAKE SURE THE GROUND LEAD DOES NOT TOUCH THE CASE OF THE TESTER OR THE CASE OF THE STARTER.

3. CONNECT THE RED LEAD FROM THE 12V STARTER WING NUT ON THE BENCH TO THE POSITIVE POST OF THE STARTER.

4. FOR SOLENOID EQUIPPED STARTERS, SEE CONNECTION PROCEDURE UNDER "SOLENOID TESTING".

THE STARTER TESTER IS ESSENTIALLY A 12 VOLT SUPPLY. MOST 12 VOLT APPLIANCES MAY BE TESTED FOR THEIR OPERATION, SUCH AS LAMPS, FANS, MOTORS, SOLENOIDS, CORES, ETC. MAXIMUM AMPERAGE OUTPUT IS 150 AMPS.

DO NOT ATTEMPT BATTERY CHARGING WITH THE STARTER TESTER

DO NOT BYPASS OR CLAMP DOWN THE STARTER CONTROL SWITCH. THE MODULE IS DESIGNED TO PRODUCE LARGE AMOUNTS OF CURRENT FOR A SHORT PERIOD OF TIME. ANY OTHER USE MAY CAUSE DAMAGE TO THE COMPONENT OR TO THE STARTER MODULE. IF OVERLOADED, AN AUTOMATIC CIRCUIT BREAKER WILL TRIP AND RESET IN APPROXIMATELY ONE MINUTE.

ADDITIONAL MONO PHASE CAPABILITIES

THE MONO PHASE TEST ADAPTER IS INCORPORATED WITH YOUR FULL OUTPUT TESTBENCH. THIS FEATURE EXTENDS THE CAPABILITIES OF THE BENCH TO TEST MOST FOREIGN MONO AND THREE PHASE ALTERNATORS THAT PROVIDE AN OUTPUT TERMINAL FOR THE DASH BOARD "CHARGE" INDICATOR LIGHT.

TO DUPLICATE THIS, A "CHARGE" INDICATOR LIGHT AND AN ADDITIONAL TEST LEAD WITH A SUITABLE TERMINAL HAVE BEEN PROVIDED FOR THIS TEST.

TEST PROCEDURE

1. CONNECT THE HARNESS TO THE ALTERNATOR UNDER TEST, AND SET UP THE PROGRAM SWITCHES IN ACCORDANCE WITH THIS MANUAL.

2. CONNECT THE TEST LEAD OF THE "CHARGE" INDICATOR LIGHT FROM THE ADAPTER TO THE PROPER TERMINAL OF THE ALTERNATOR UNDER TEST. (USUALLY MARKED WITH THE LETTER "L").

3. SET THE "MONO/THREE PHASE" SWITCH TO THE APPROPRIATE POSITION, THAT CORRESPONDS WITH THE TYPE OF ALTERNATOR UNDER TEST.

4. PRESS THE DRIVE MOTOR SWITCH. THE "CHARGE" LIGHT WILL REMAIN ON.

5. PLACE THE LOAD SWITCH INTO THE PROPER TEST POSITION. THE "CHARGE" LIGHT SHOULD GO OFF, WITH A GOOD ALTERNATOR.

Electrical Rebuilder's ERA ASSOCIATION 2001

STARTER OPERATION INSTRUCTIONS

IMPORTANT NOTICE TO OPERATOR: WHEN SETTING UP YOUR TESTBENCH, IT IS IMPORTANT THAT YOU FOLLOW THE INSTRUCTIONS GIVEN BY THE MANUFACTURER.

1. DO NOT USE AN EXTENSION CORD.
2. IF YOU MUST USE AN EXTENSION CORD, THE MANUFACTURER RECOMMENDS #4 GUAGE IN SIZE AND NO LONGER THAN 20 FEET.
3. PLUG THE TESTER INTO A 20 AMP WELL GROUNDED CIRCUIT BREAKER.
4. DO NOT REMOVE THE GROUND PIN FROM YOUR ELECTRICAL RECEPTACLE PLUG. DOING SO WILL PRESENT SEVERE DIFFICULTIES WHEN TESTING STARTERS, ESPECIALLY FORD STARTERS WITH HIGH AMP TORQUES.

CONNECTION INSTRUCTIONS

REMEMBER, YOU READ FREE AMPERAGE DRAW ONLY
USE THE AMPERAGE SCALE LOCATED ON THE METER MARKED AMPERAGE

Use the starter strap to tighten the starter down, to avoid bodily injury. Starter strap is not supplied with the analyzer. Order the starter strap #3001-25 direct from the Factory. Retail Price is $20.80.



Alligator clamp RED — Connect to the battery terminal of starter being tested - positive.

Alligator clamp BLACK — Connect to ground of starter being tested - negative.

Alligator clip SMALL RED — Connect to the ignition terminal of solenoid, looking at the solenoid from the rear right side.

Alligator clip SMALL BLACK — Connect to the remaining terminal ground of solenoid, looking at the solenoid from the rear left side. Some starters provide only a terminal for the ignition side, such as the Chrysler Starter. If this is the case, connect the BLACK small lead to the large alligator clamp, to avoid shortage.

NOTE: Starters without solenoids, clip the small clips to the large clamps to avoid shortage, and to get them out of the way.

TEST STARTERS BY PRESSING THE STARTER SWITCH. FOR TEST RESULTS SEE BELOW. FOR STARTER FREE SPIN SPECIFICATIONS REFER TO THE NEXT PAGE.

AFTER ALL THE CONNECTIONS ARE MADE, AND THE STARTER IS SECURELY FASTENED TO THE TESTBENCH, PRESS THE FREE SPIN STARTER SWITCH. UPON PRESSING THE STARTER SWITCH, THE NEEDLE WILL SWING OUT. HOLD YOUR FINGER ON THE SWITCH UNTIL THE NEEDLE STABILIZES. THIS WILL ONLY TAKE A FEW SECONDS. AT THIS POINT, READ YOUR FREE AMPERAGE DRAW FROM THE AMPERAGE SCALE. TAKE YOUR FINGER OFF THE FREE SPIN STARTER SWITCH, COMPARE YOUR READING WITH THE SPECIFICATIONS GIVEN. YOUR IGNITION LIGHT SHOULD COME ON. IF YOU TESTED A STARTER WITH A SOLENOID AND YOU NOTICE A SLIGHT VARIANCE IN YOUR IGNITION LIGHT, SUCH AS GETTING DIMMER, GO TO THE SOLENOID TEST TO VERIFY THE PROBLEM.

IMPORTANT: IF THE NEEDLE PEGS TO 200 AMPS, THIS INDICATES A DEFECTIVE STARTER. DO NOT REPEAT TEST. REJECT THE STARTER.

TEST SOLENOID MOUNTED ON STARTER

LEAVE STARTER IN THE VISE BUT REMOVE THE LARGE ALLIGATOR CLAMP (RED) FROM THE BATTERY TERMINAL OF THE STARTER. LEAVE ALL THE REMAINING ALLIGATOR CLAMPS CONNECTED (LARGE BLACK AND 2 SMALL CLIPS, RED AND BLACK). PRESS THE FREE SPIN STARTER SWITCH. YOUR AMPERAGE MUST SHOW BETWEEN 48-55 AMPS. IF YOU STILL NOTICE THE IGNITION LIGHT GROWING DIM, YOUR PROBLEM IS IN THE SOLENOID.

Electrical Rebuilder's ERA FOUNDED 2001 ASSOCIATION

TYPICAL STARTER CONNECTIONS

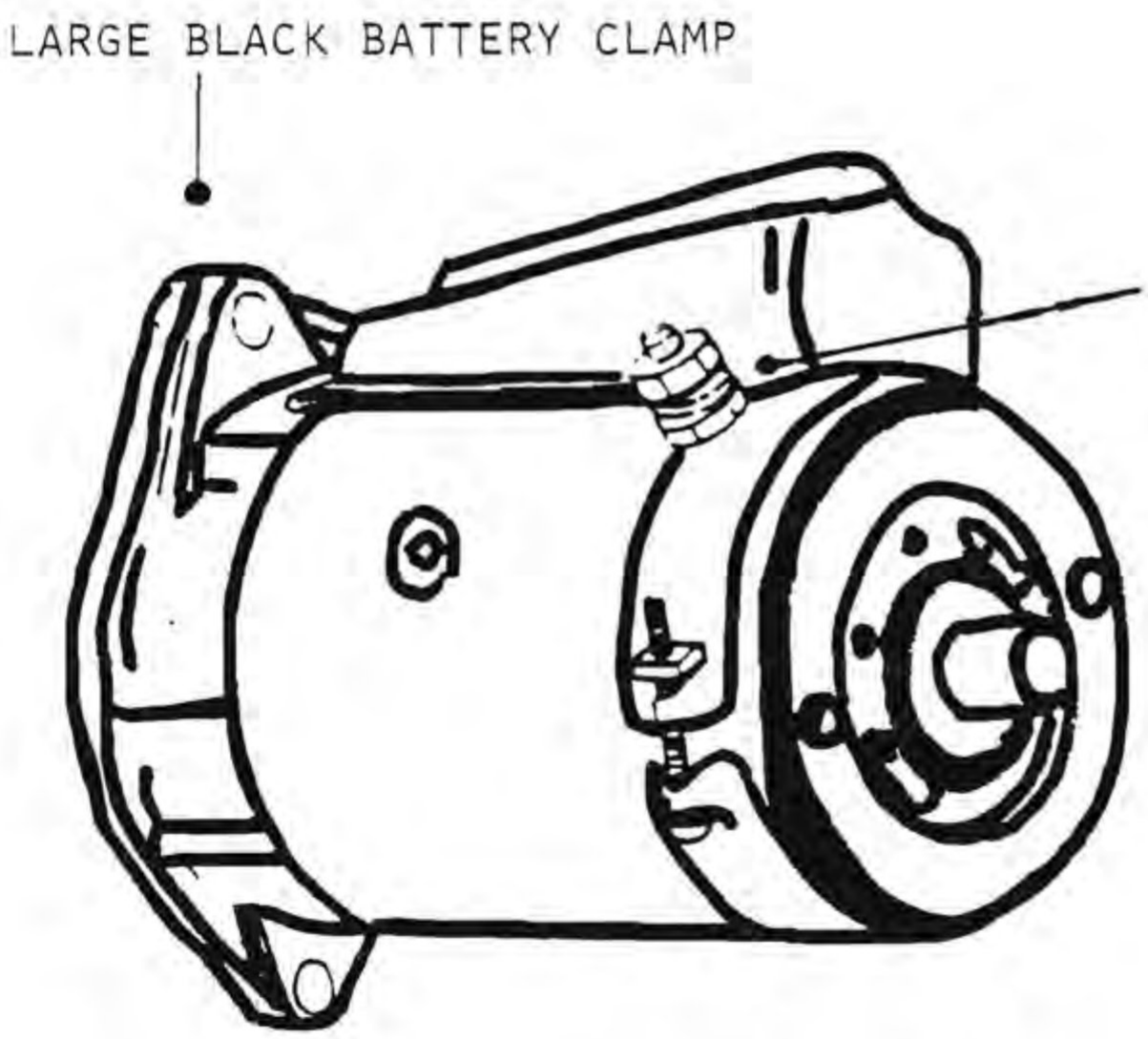

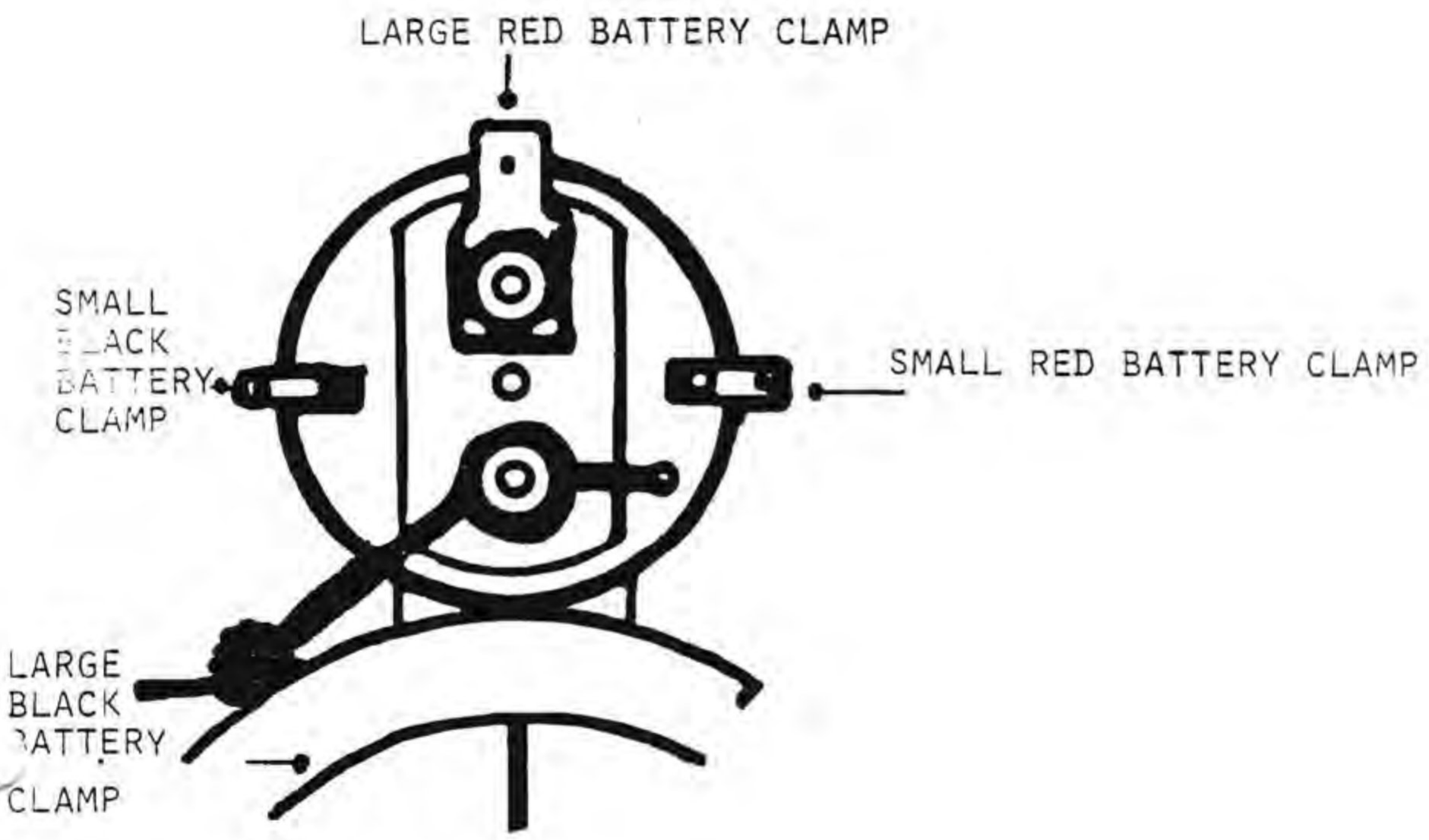

Electrical Rebuilder's ERA FOUNDED 2001 ASSOCIATION

STARTER FREE SPIN SPECIFICATIONS
published by mini tune inc.

LESTER PART NUMBER	ARROW PART NUMBER	PERFECTION HY TEST PART NUMBER	KIMCO PART NUMBER	BLUE CHIP PART NUMBER	mini tune ACCEPTABLE FREE SPIN AMPERAGE SPECIFICATIONS
3510 GM	34-1074	04-8429	12-4249	43-1353	95-145
3663 GM	34-1070	04-8380	12-4268	43-1357	70-120
3555 GM	34-1114	04-8500	12-4052	43-1361	85-135
3124 Ford	34-1059	04-523	12-2855	43-1720	60-110
3131 Ford	34-1056	04-528	12-4262	43-1722	55-105
3257 Chrysler	34-1029	04-334	12-4275	43-1526	90-150
3149 Ford	34-1049	04-543	12-4274	43-1726	55-105
3664 GM	34-1070	04-8366	12-2873	43-1357	70-120
3503 GM	35-1075	04-9522	12-4381	43-4407	90-140
3153 Ford	34-1770	04-523T	12-4281	43-1729	55-105
3207 Ford	34-1096	04-539	12-4236	43-1124	55-105
3156 Ford	34-1768	04-544T	12-4307	43-1732	55-105
3152 Ford	34-1765	04-543T	12-4289	43-1728	60-110
3602 S GM	35-1792	9524	12-4298	43-4401	80-130
3560 GM	34-1073	8400	12-4269	43-1363	95-145
3504 S GM	35-1791	9523	12-4296	43-4402	85-135
3695 GM	34-1119	8349	12-4270	43-1360	70-120
3635 GM	34-1088	8368	12-2040	43-1316	95-145
3508 GM	34-1069	8427	12-4273	43-1352	70-120
3151 Ford	34-1067	546	12-4283	43-1727	45-95
3142 S Ford	35-1064	540	12-2862	43-3750	85-135
3154 Ford	34-1771	529T	12-4290	43-1730	60-110
3525 GM	34-1071	8196	12-4267	43-1354	95-115
3148 Ford	34-1048	544	12-4266	43-1725	55-105
3570 GM	34-1021	8521	12-4053	43-1351	95-145
3627 GM	34-1073	8338	12-4096	43-1363	95-145
3132 Ford	34-1062	529	12-4034	43-1723	55-105
3135 Ford	34-1063	530	12-2858	43-1724	60-110
3535 MS GM	35-1872	9526	12-4381	43-3364	85-135
3250 Chrysler	34-1025	334	12-4275	43-1351	90-150
General Motors Permanent Magnet Starter					85-125

THE MANUFACTURER CANNOT BE HELD RESPONSIBLE FOR THE FREE SPIN INFORMATION PRINTED. THE SPECIFICATIONS PUBLISHED WERE OBTAINED FROM A VARIETY OF REBUILDERS. SPECIFICATIONS MAY VARY FROM ONE REBUILDER TO ANOTHER DEPENDING ON THE QUALITY OF COMPONENTS USED. CONTACT YOUR SUPPLIER IF UNUSUAL TEST RESULTS ARE OBTAINED.

Electrical Rebuilder's ERA FOUNDED 2001 ASSOCIATION

See Operation's Manual for Starter Hook-Up Instructions.

FORD HIGH TORQUE STARTERS

120 - 170 AMPS DEPENDING ON REBUILDERS SPECIFICATION

KNOWN AMPERAGES OF FOREIGN STARTERS

CAR MODEL	SPECIFIED AMPS
ALFA ROMEO	40 - 50
AUDI	45 - 50
BMW	45 - 60
FIAT	45 - 50
MERCEDES	30 - 50
OPEL	35 - 50
PORSCHE	33 - 50
SAAB	16 - 25
VW	38 - 45
VOLVO	40 - 50
TOYOTA	40 - 60
DATSUN	40 - 60

WE ALWAYS RECOMMEND THAT YOU DOUBLE CHECK ALL SPECIFICATIONS GIVEN HERE, WITH YOUR UP-TO-DATE MOTOR HANDBOOK OR ANY SPECIFICATION BOOKLET PRINTED BY THE MANUFACTURER.

Electrical Rebuilder's ERA FOUNDED 2001 ASSOCIATION

1960 - 1969 (ALL MODELS) – "B" CIRCUIT

Used with Double Contact Mechanical Regulator

(1)

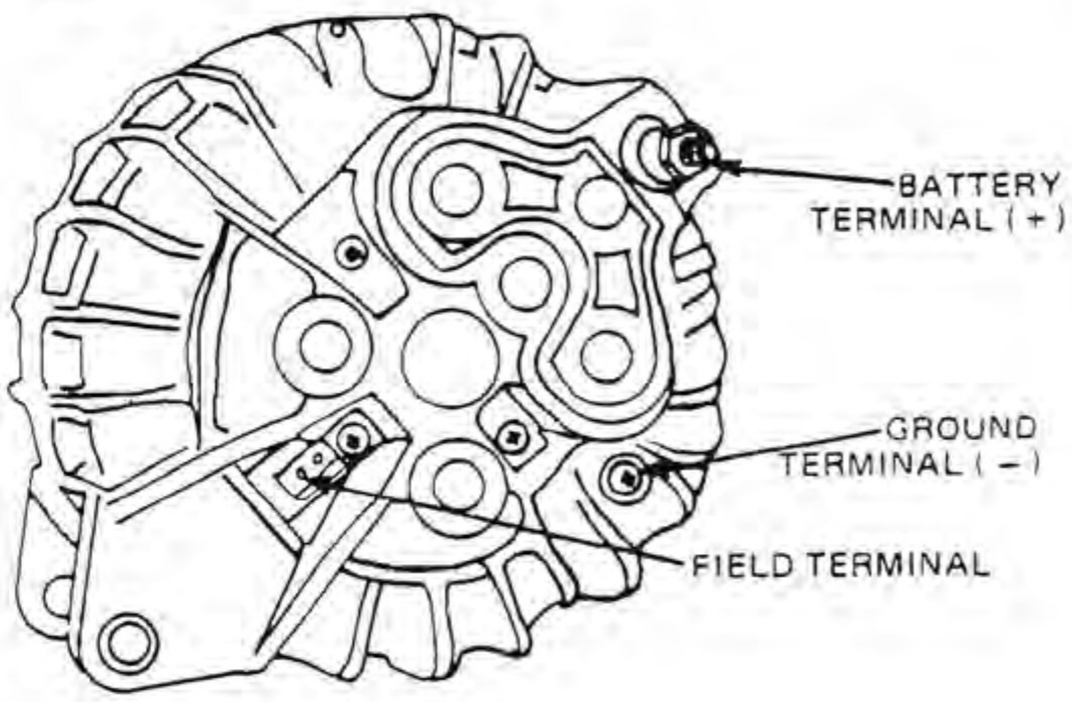

1970 - 1971 (ALL MODELS) – "A" CIRCUIT

Used with Electronic Regulator =3438150

(3)

Superseded by 29-1028 Type

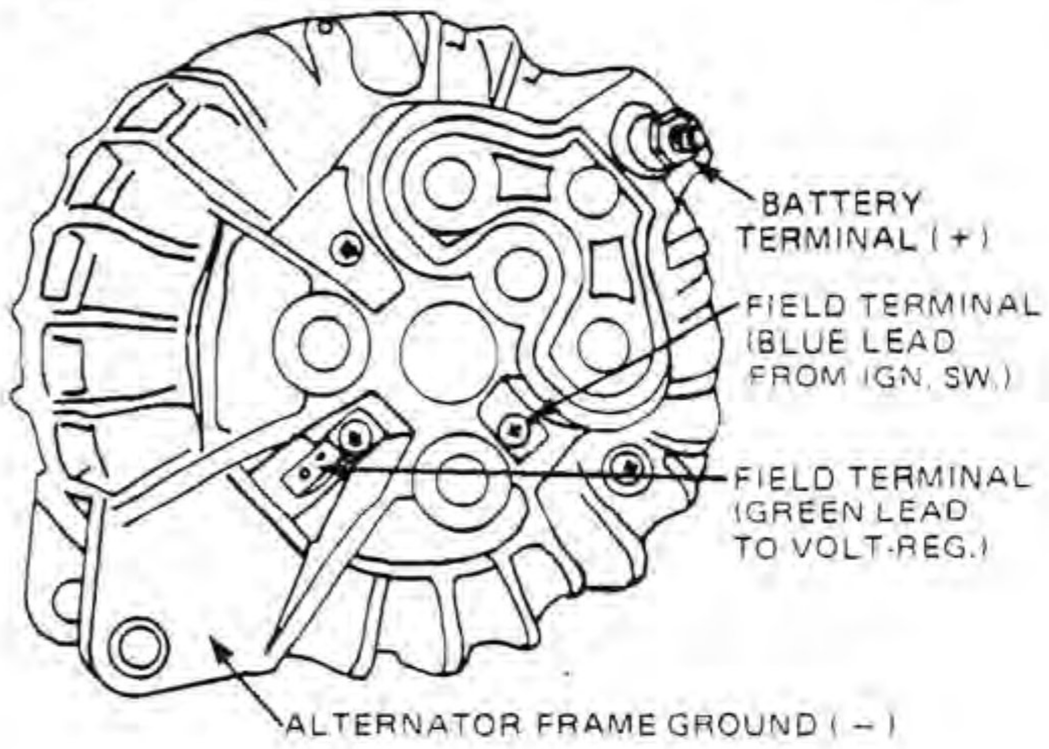

1970 - 1984 – "A" CIRCUIT

Used with Electronic Regulator

(2)

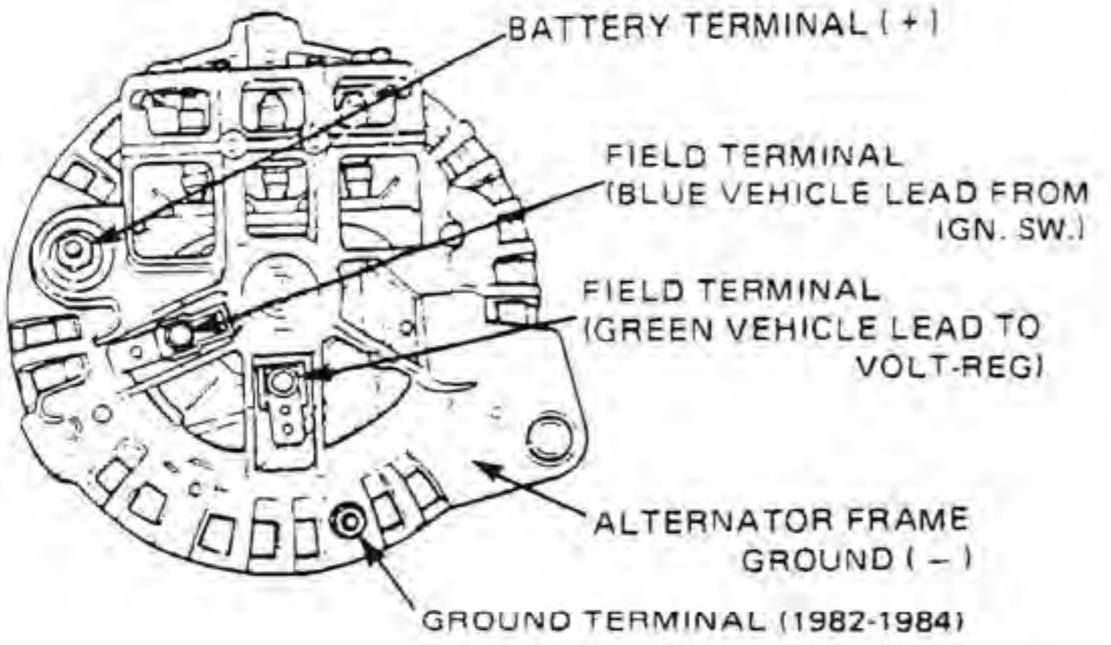

1975 - 1984 100 AMP – "A" CIRCUIT

(4)

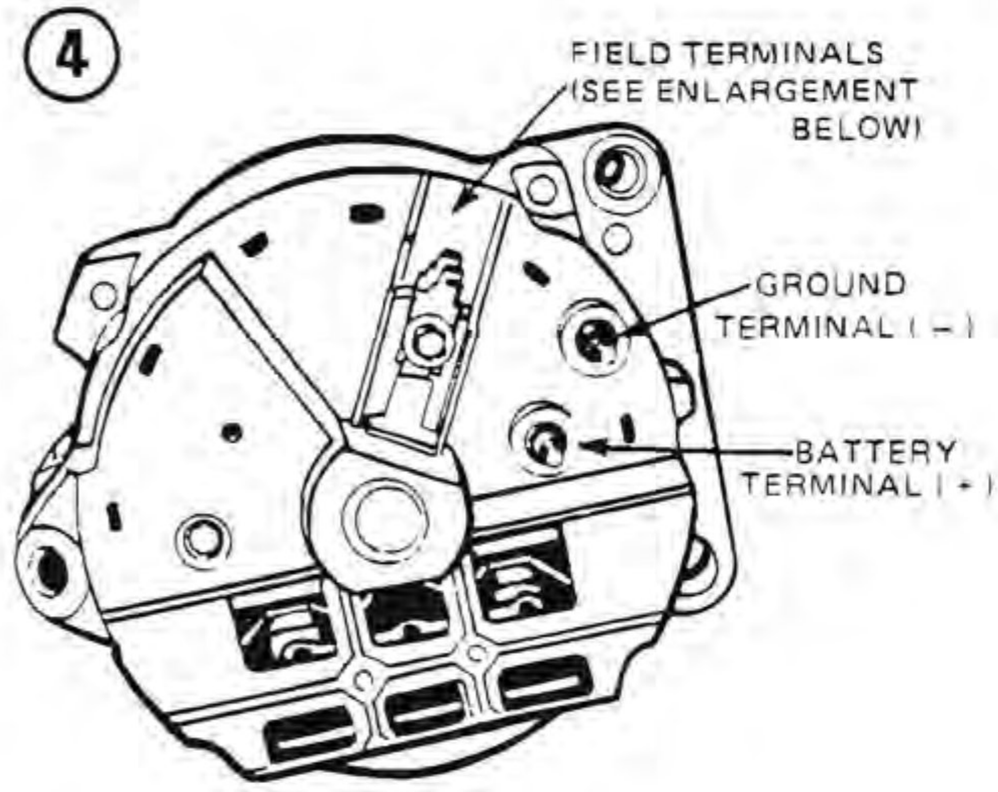

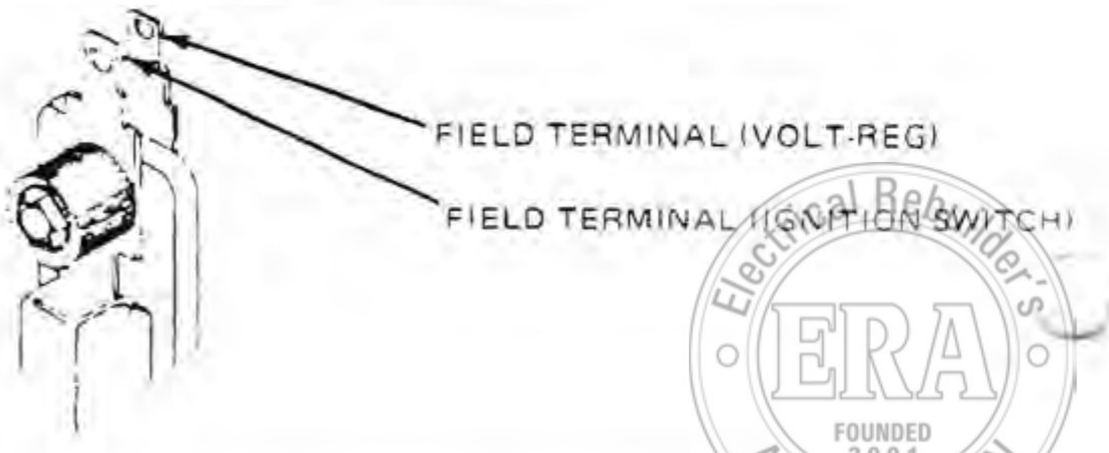

Electrical Rebuilder's ERA FOUNDED 2001 ASSOCIATION

DELCOTRON

GENERAL MOTORS 1962 - 1976 – "B" CIRCUIT

Used Primarily with External Double Contact Mechanical Regulator

(5)

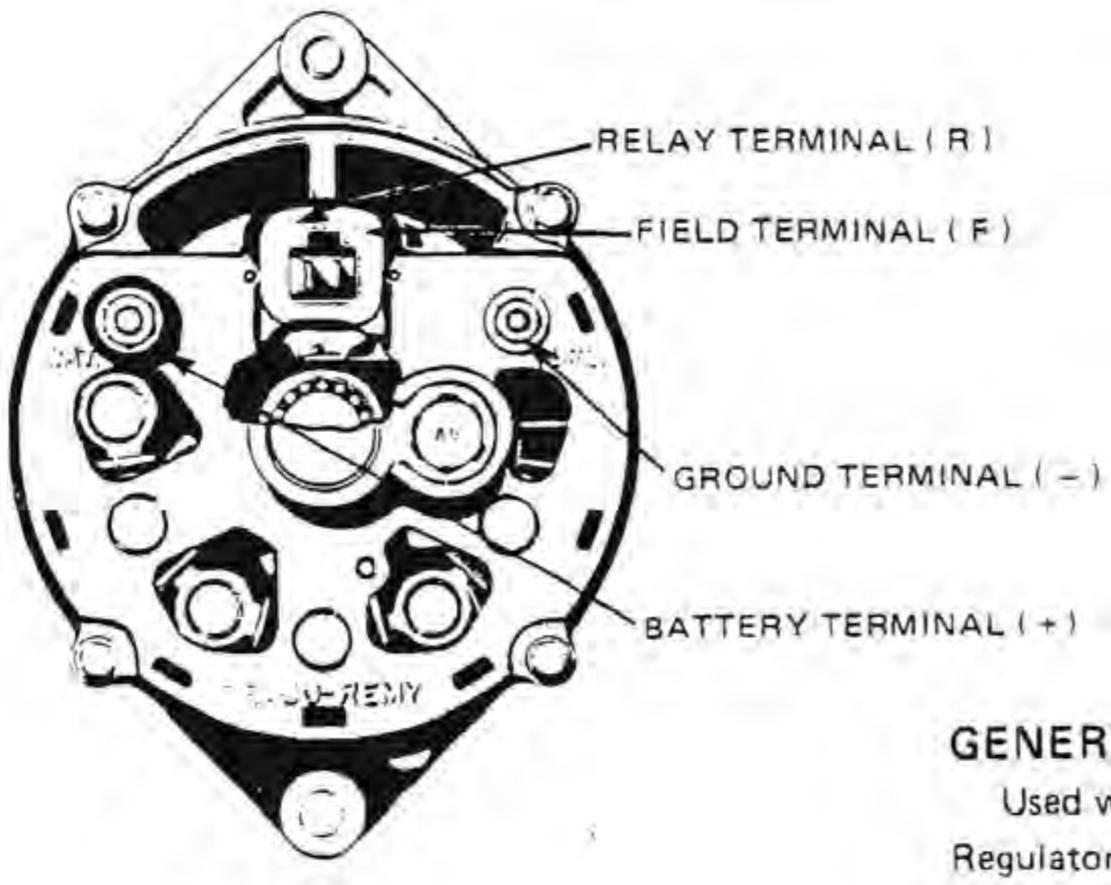

GENERAL MOTORS 1972 – "B" CIRCUIT

Used with External Double Contact Mechanical Regulator

(6)

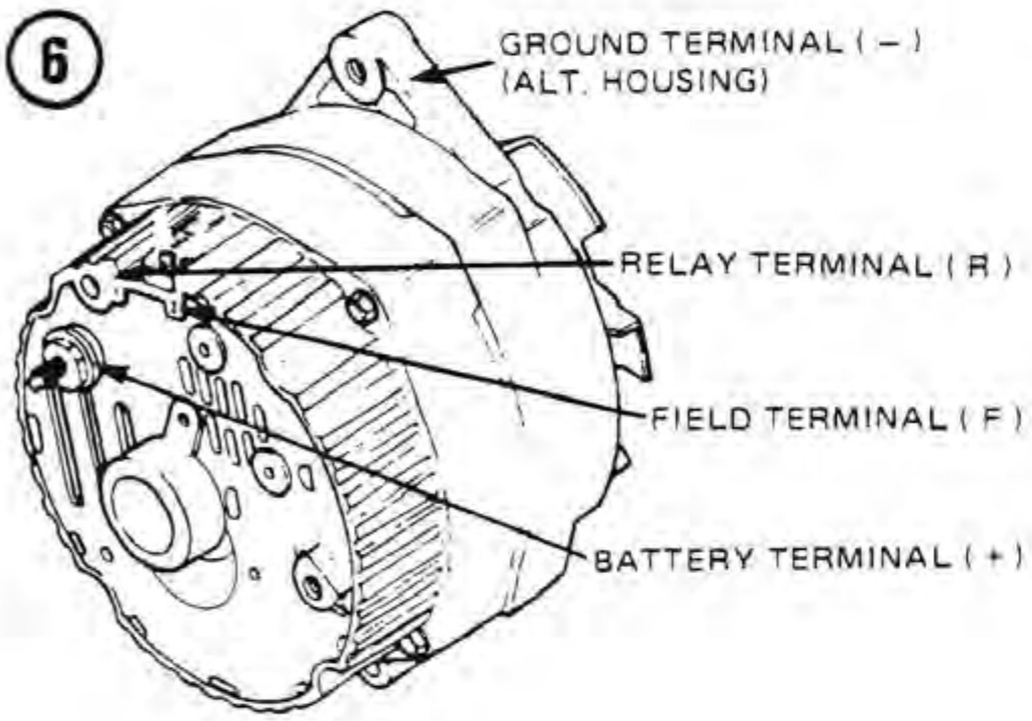

GENERAL MOTORS 1969 - 1984 AND AMC 1976 - 1984 – "A" CIRCUIT

Uses Internal, Solid State Regulator and Diode Trio

Disregard R & F Stamping on Alternator Frame

(7)

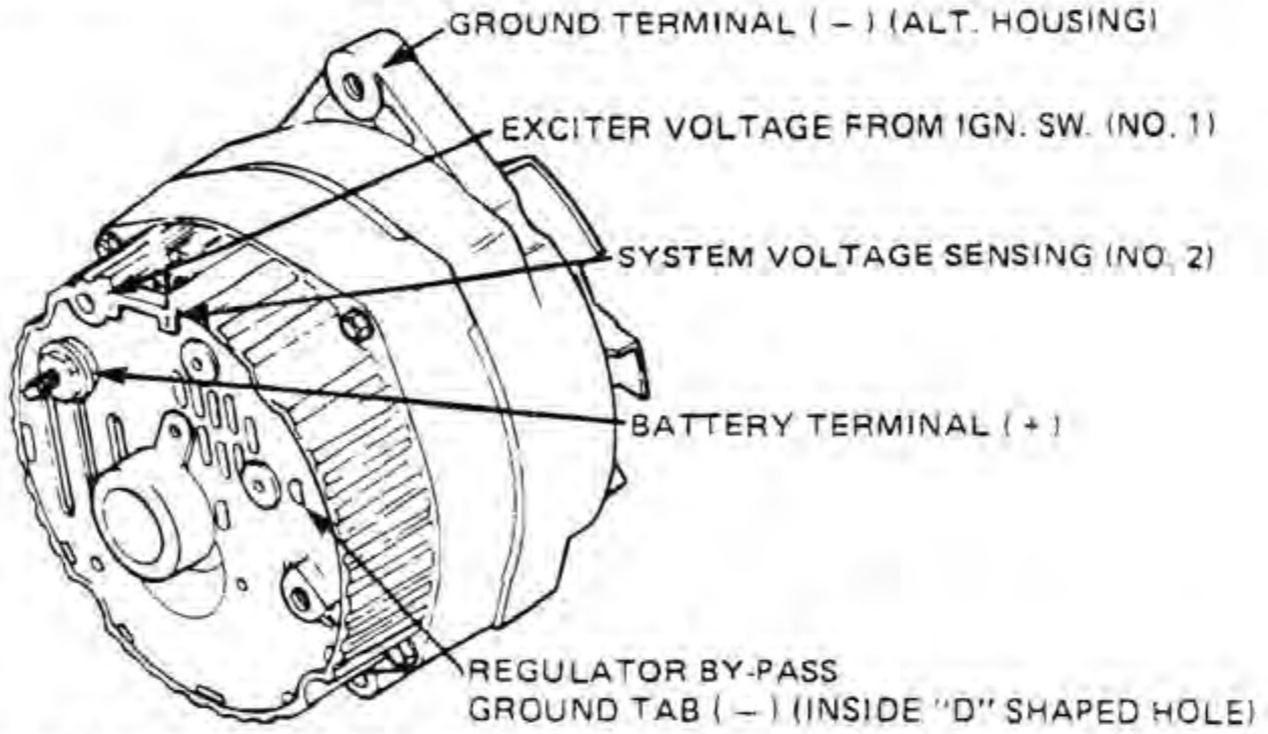

CAUTION: Tab is within ¾ inch of casting surface. Do not force probe deeper than ¾ inch into end of frame.

Electrical Rebuilder's ERA FOUNDED 2001 ASSOCIATION

FORD

FORD PRODUCTS 1963 - 1984 AND AMC 1977 - 1978

Terminals Are Inaccessible at Alternator. Test Connections Are Made at Regulator Plug

8

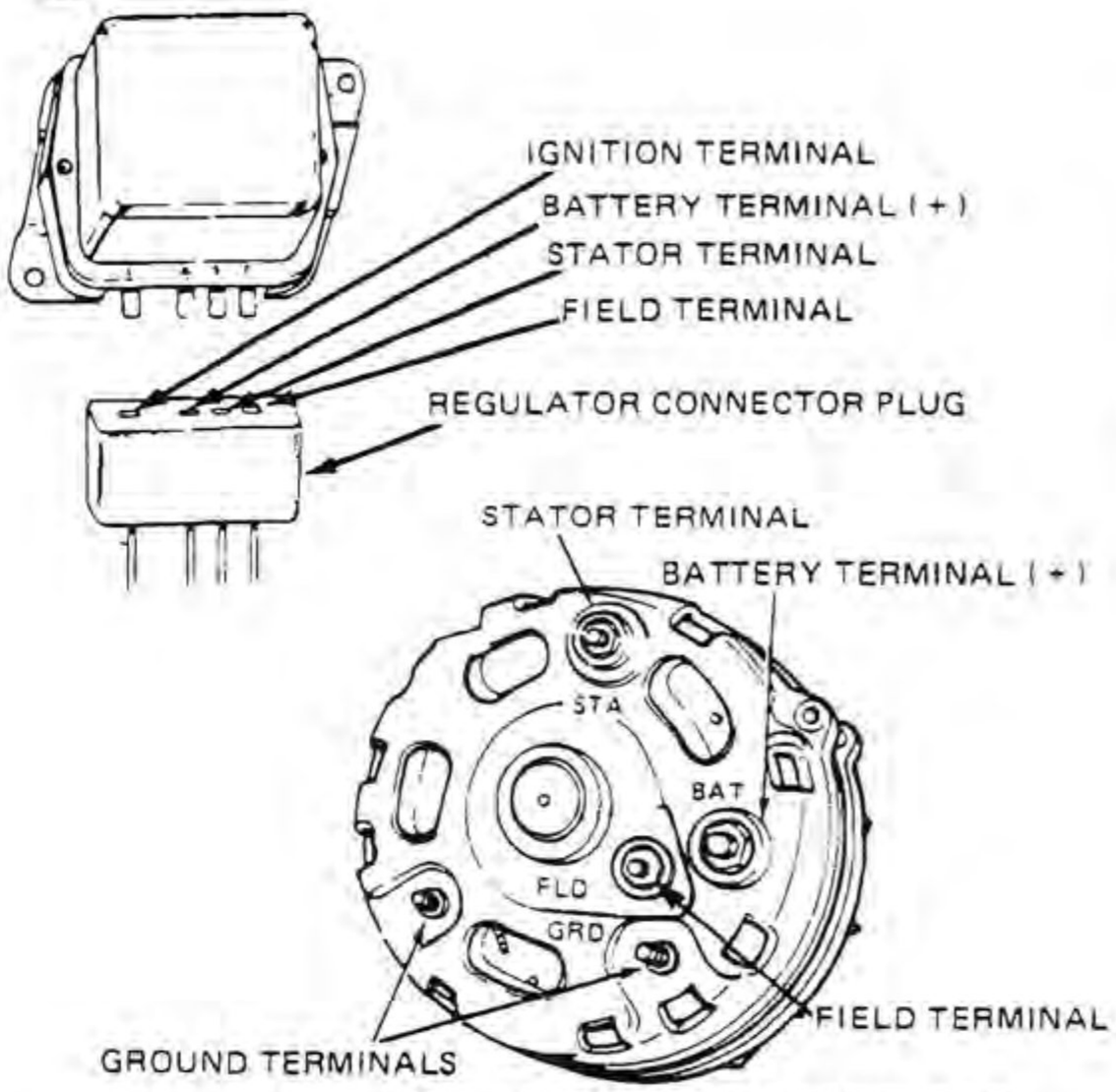

REAR TERMINAL ALTERNATOR

FORD PRODUCTS 1972 - 1984 – "B" CIRCU

Uses Double Contact Mechanical Regulator or Transistorized Adjustable Regulator =D4HF-10316 AN

10

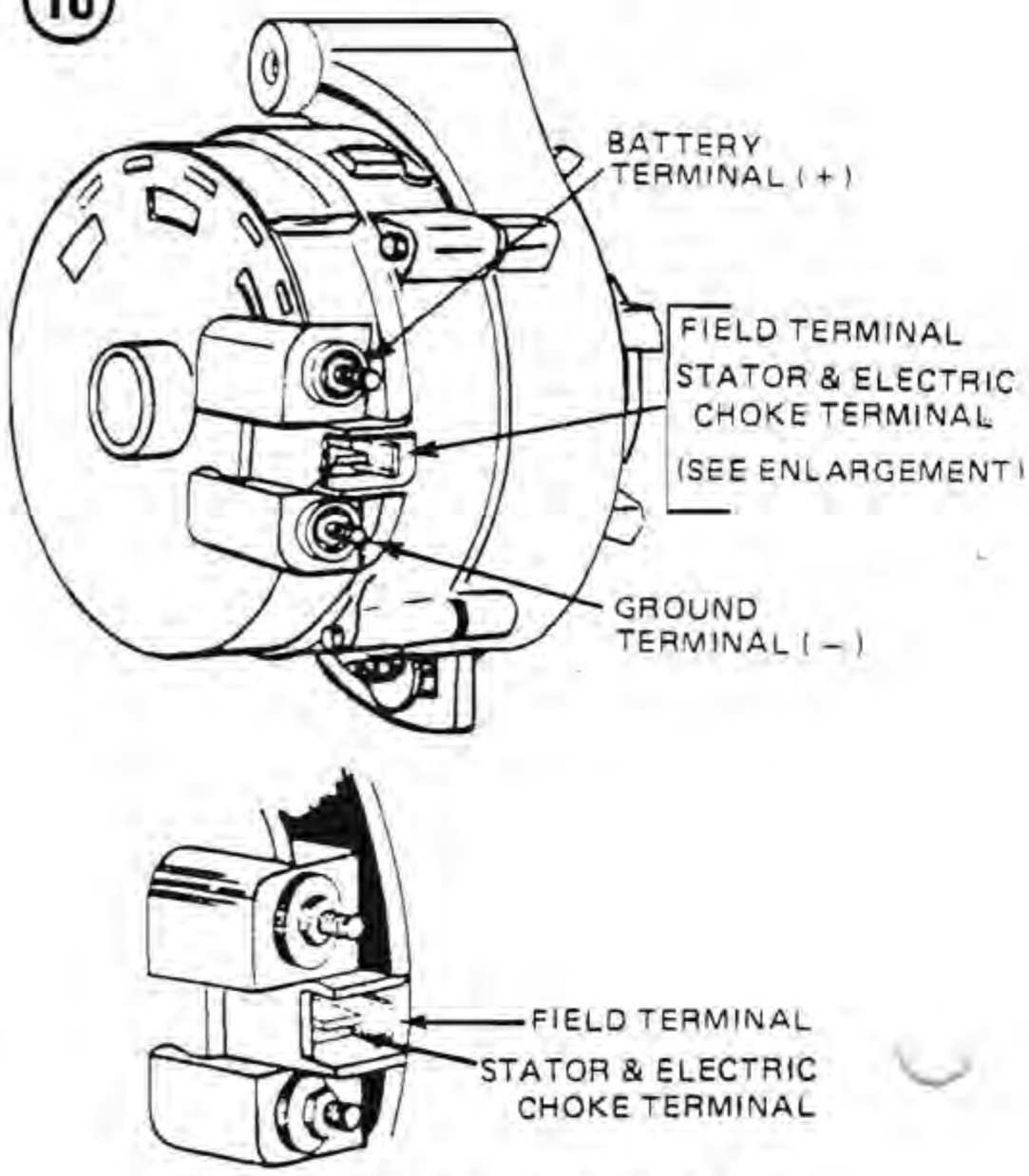

SIDE TERMINAL ALTERNATOR

MOST LINCOLNS AND T-BIRDS 1969 - 1971 – "A" CIRCUIT

With Integral Regulator

9

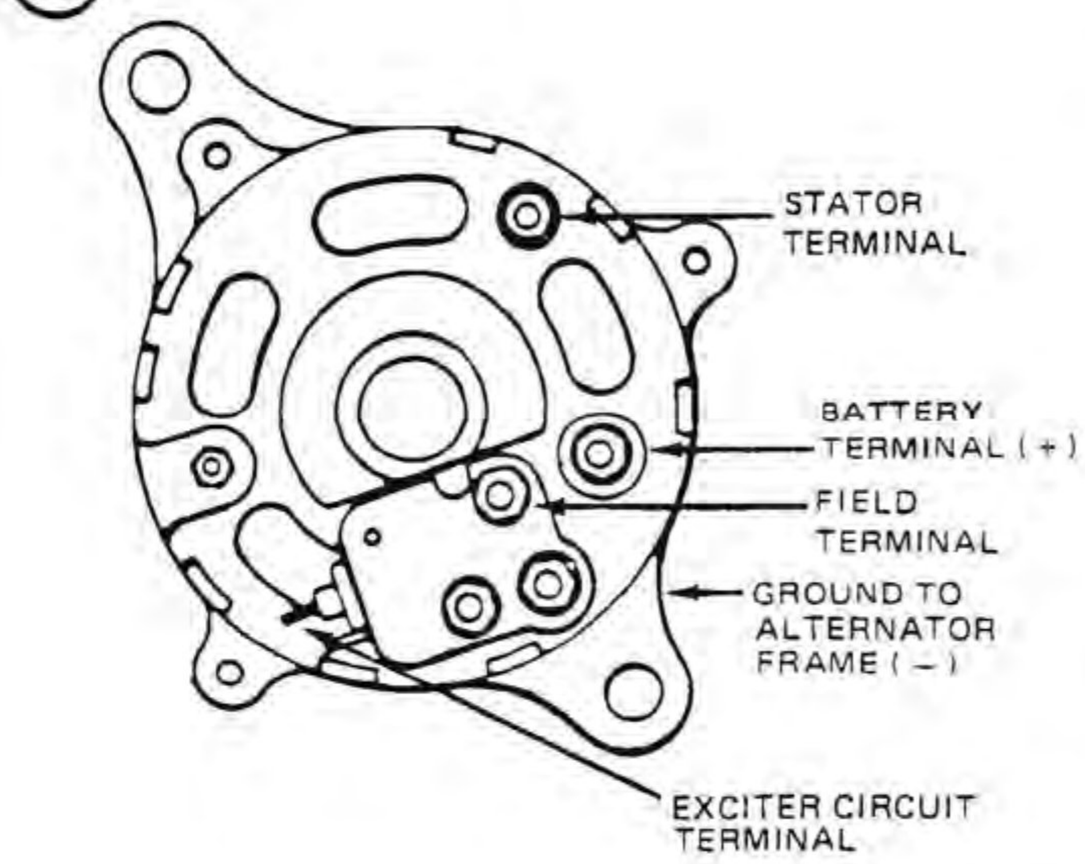

FORD TEMPO AND MERCURY TOPAZ (2.3L w A/C) – "A" CIRCUIT

With Integral Regulator

11

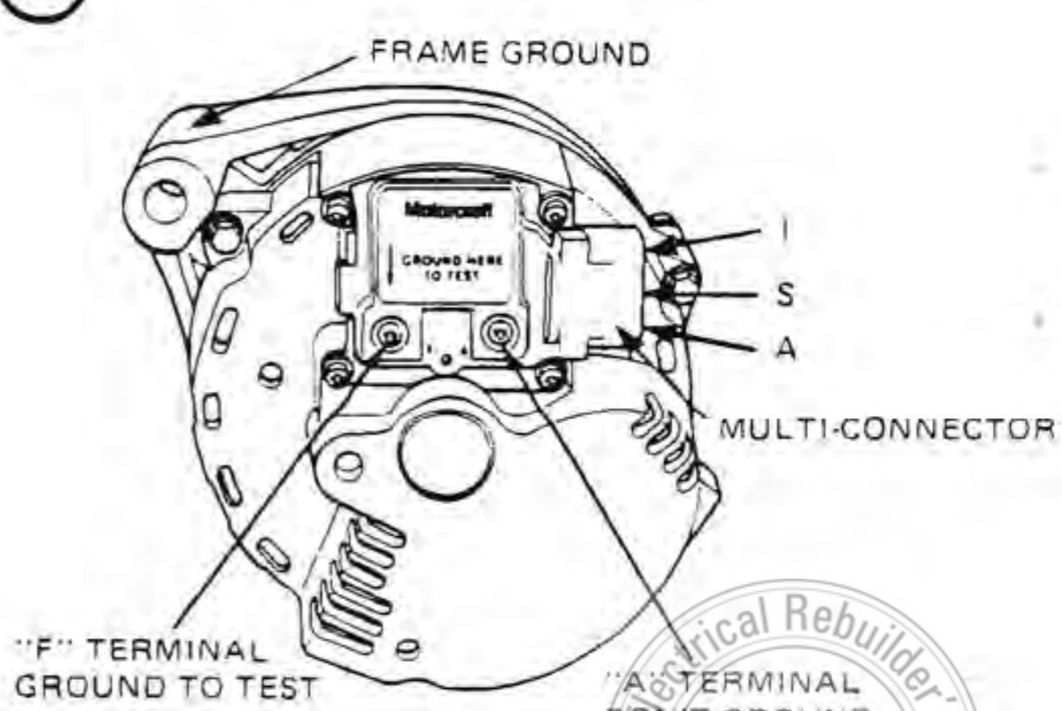

Electrical Rebuilder's ERA FOUNDED 2001 ASSOCIATION

MOTOROLA

AMERICAN MOTORS 1963 - 1970 CHECKER, JEEP AND OTHERS – "B" CIRCUIT

35 Amp – Single Isolation Diode Used with Transistor Regulator

(12)

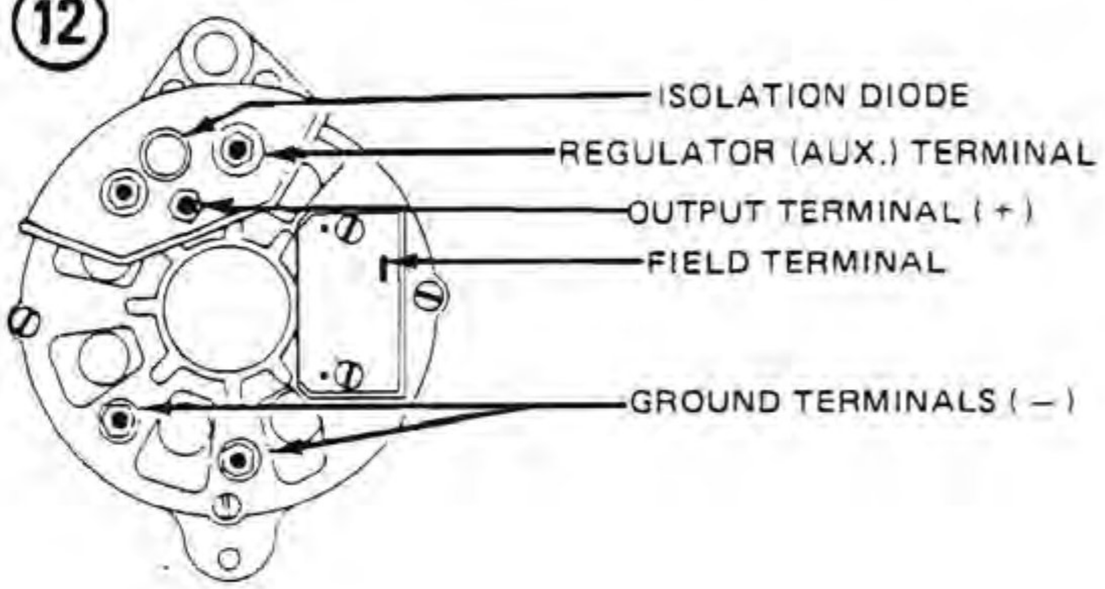

AMERICAN MOTORS 1970 CHECKER, JEEP AND OTHERS – "B" CIRCUIT

35 Amp – Single Isolation Diode Used with Transistor Regulator

(14)

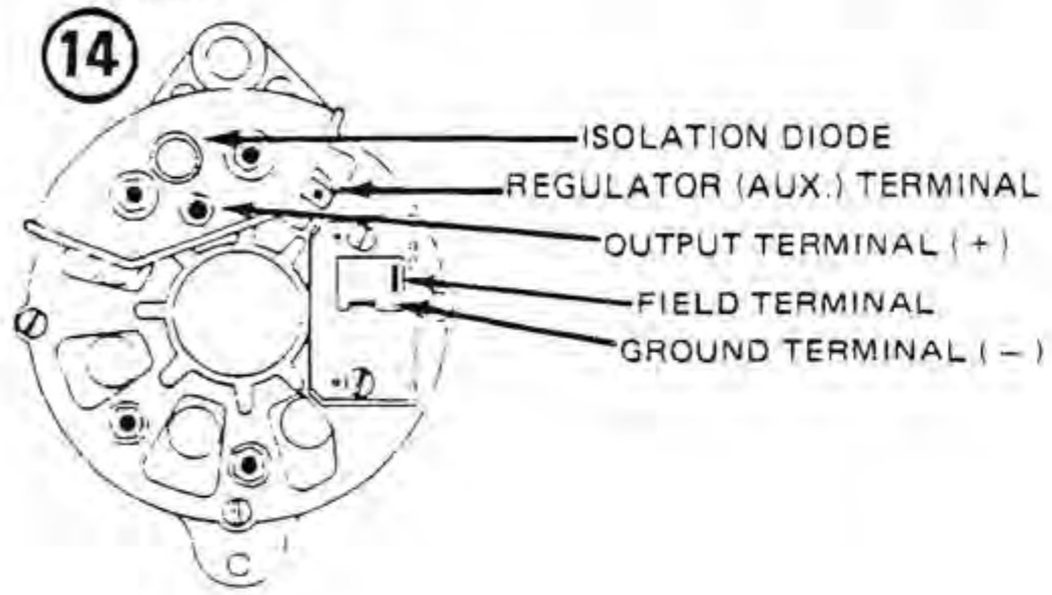

AMERICAN MOTORS 1963 - 1970 CHECKER, JEEP; AMC AND OTHERS – "B" CIRCUIT

40 to 55 Amp – Dual Isolation Diode Used with Transistor Regulator

(13)

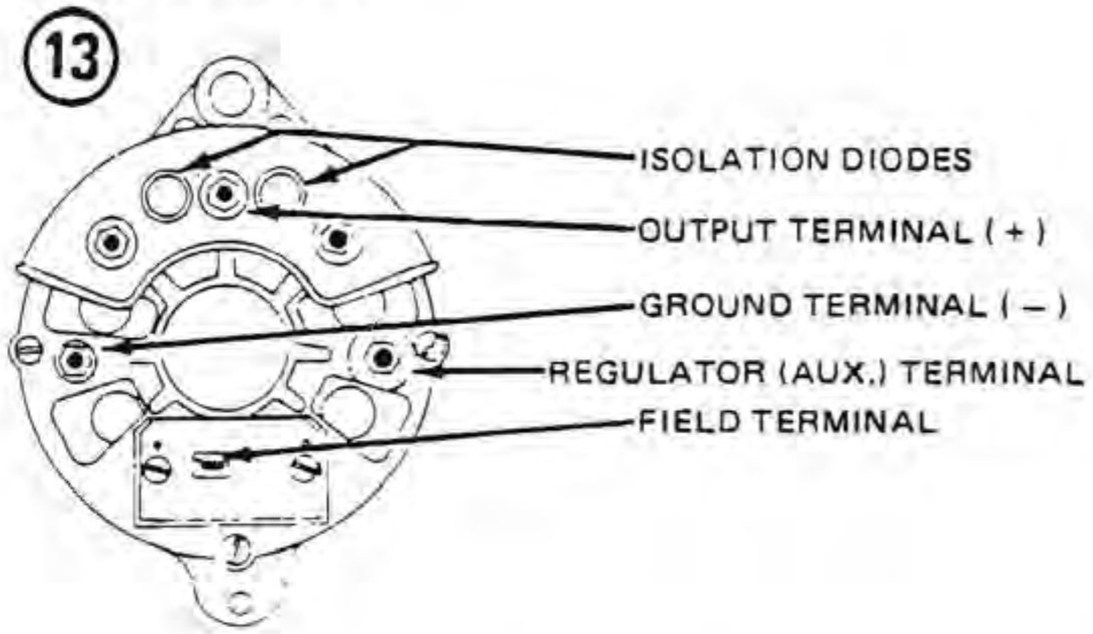

AMERICAN MOTORS 1970 CHECKER, JEEP AND OTHERS – "B" CIRCUIT

55 Amp – Dual Isolation Diode Used with Transistor Regulator

(15)

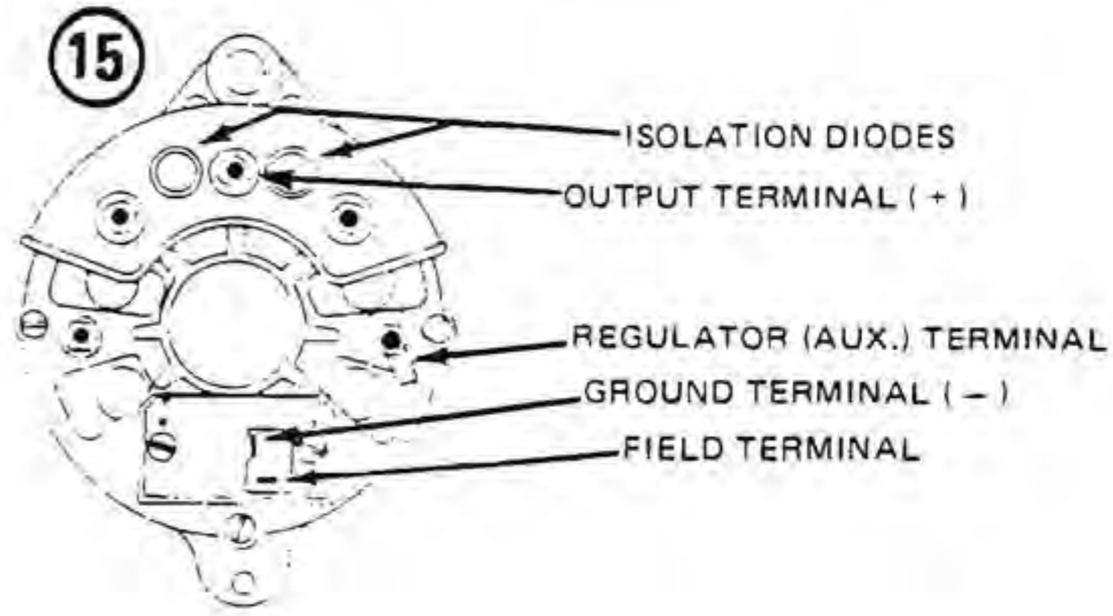

AMERICAN MOTORS AND JEEP 1971 - 1975 AND OTHERS – "B" CIRCUIT

35, 55 or 62 Amp – Used with Transistor Regulator And Diode Trio

(16)

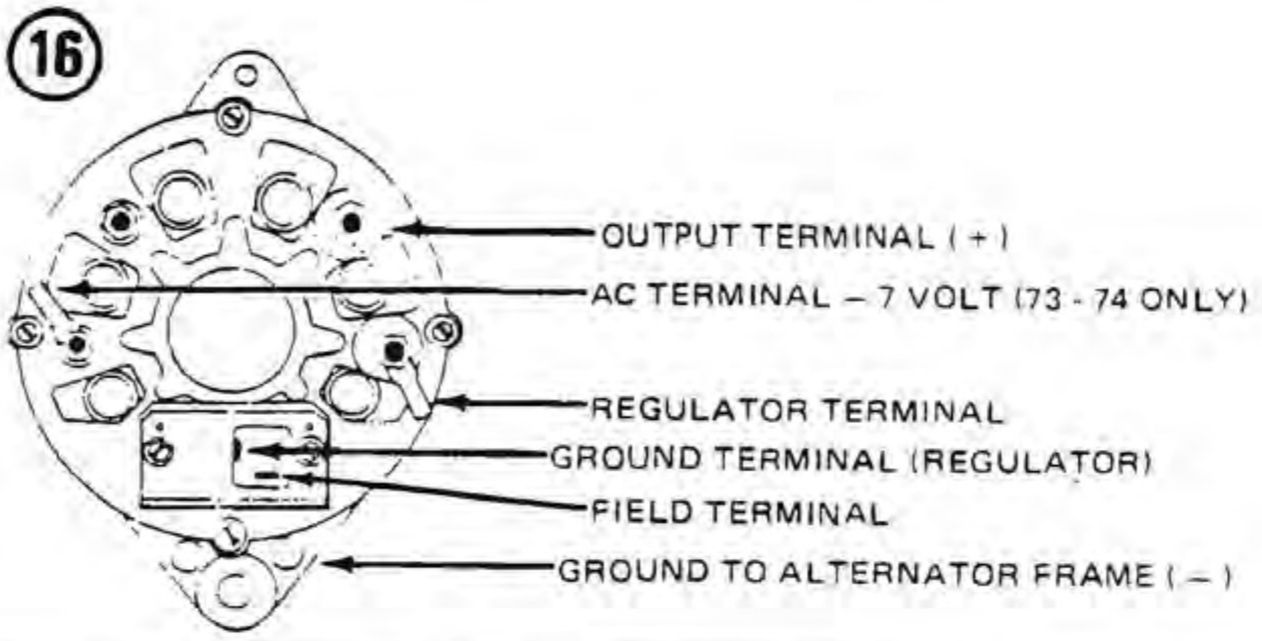

Electrical Rebuilder's ERA FOUNDED 2001 ASSOCIATION

BOSCH

PORSCHE, AUDI, BMW 1983 - 1984 AND VOLVO 1978 - 1984 – "B" CIRCUIT

(17)

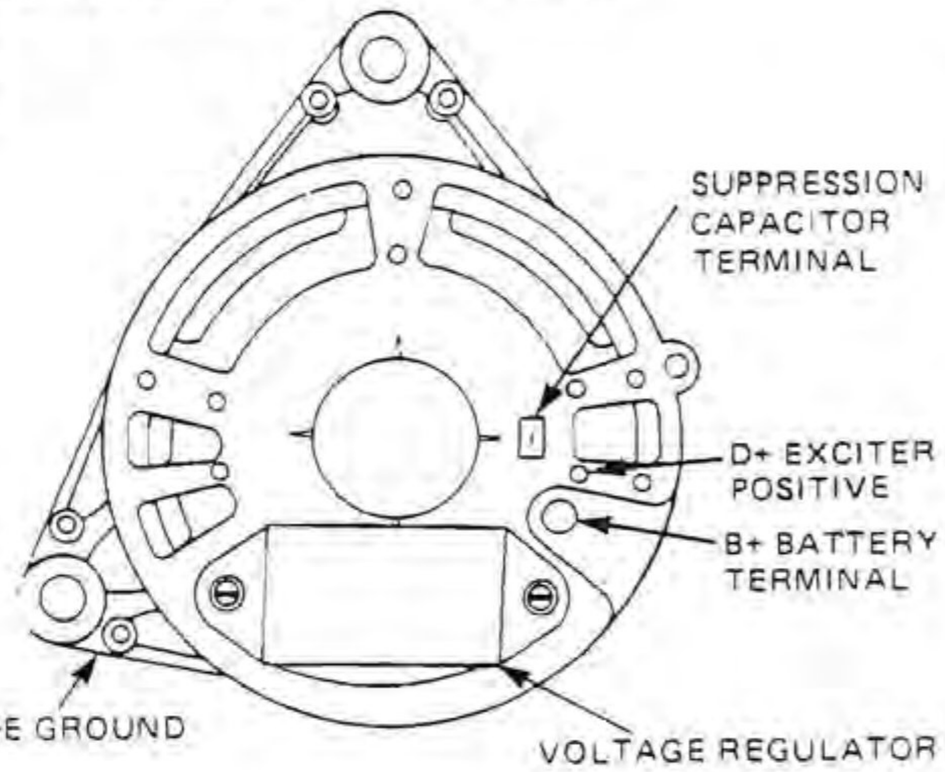

MERCEDES, BMW, AUDI, VOLVO 1974 - 1978 – "B" CIRCUIT

(19)

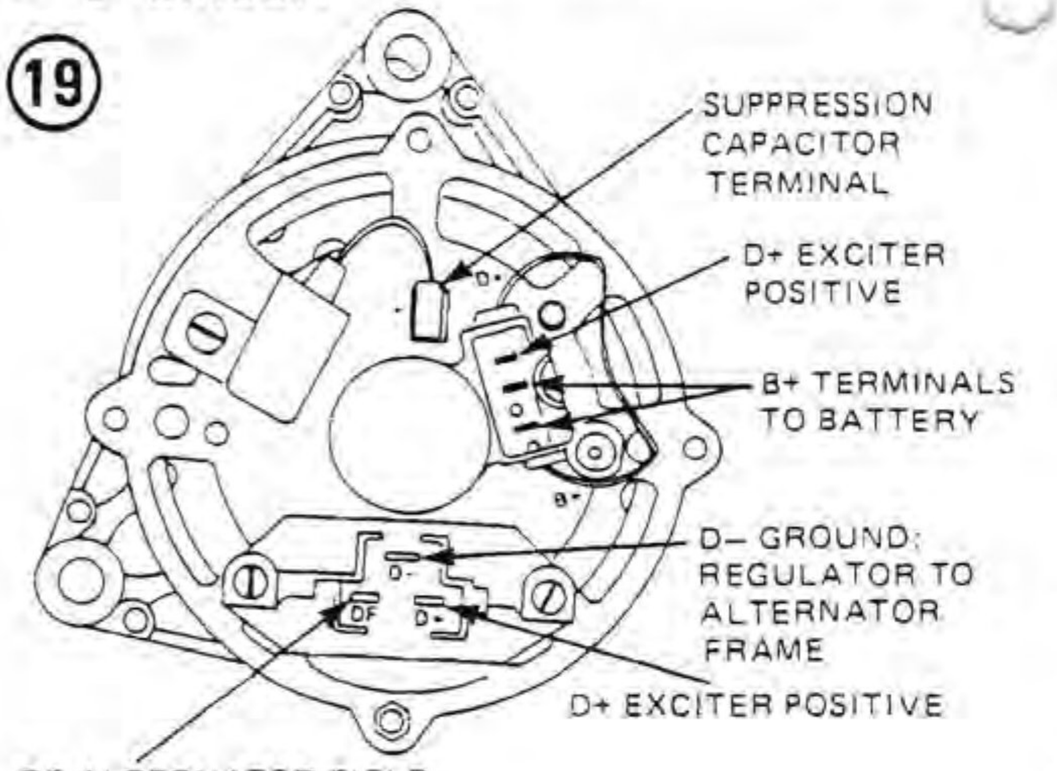

MERCEDES, BMW, AUDI 1979 - 1983 AND VW 1975 - 1984 – "B" CIRCUIT

(18)

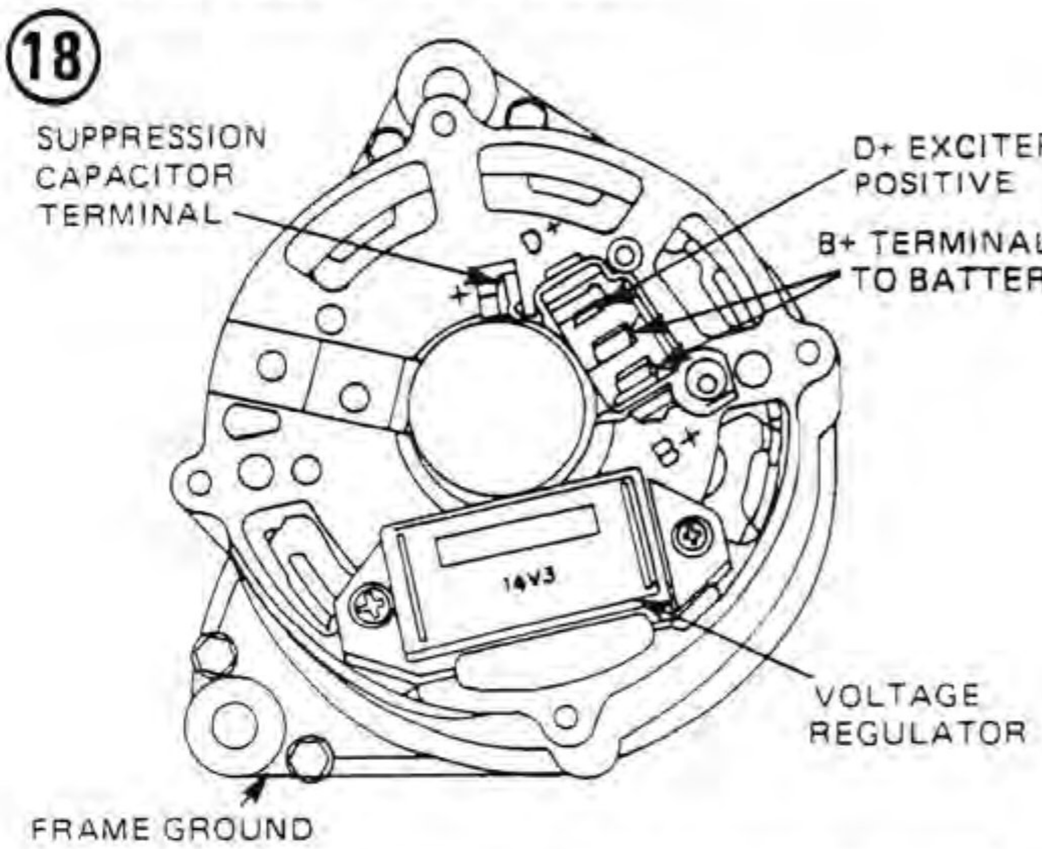

EARLY PORSCHE, AUDI, VW, BMW, VOLVO – "B" CIRCUIT

Mounted on Alternator Brackets

(20)

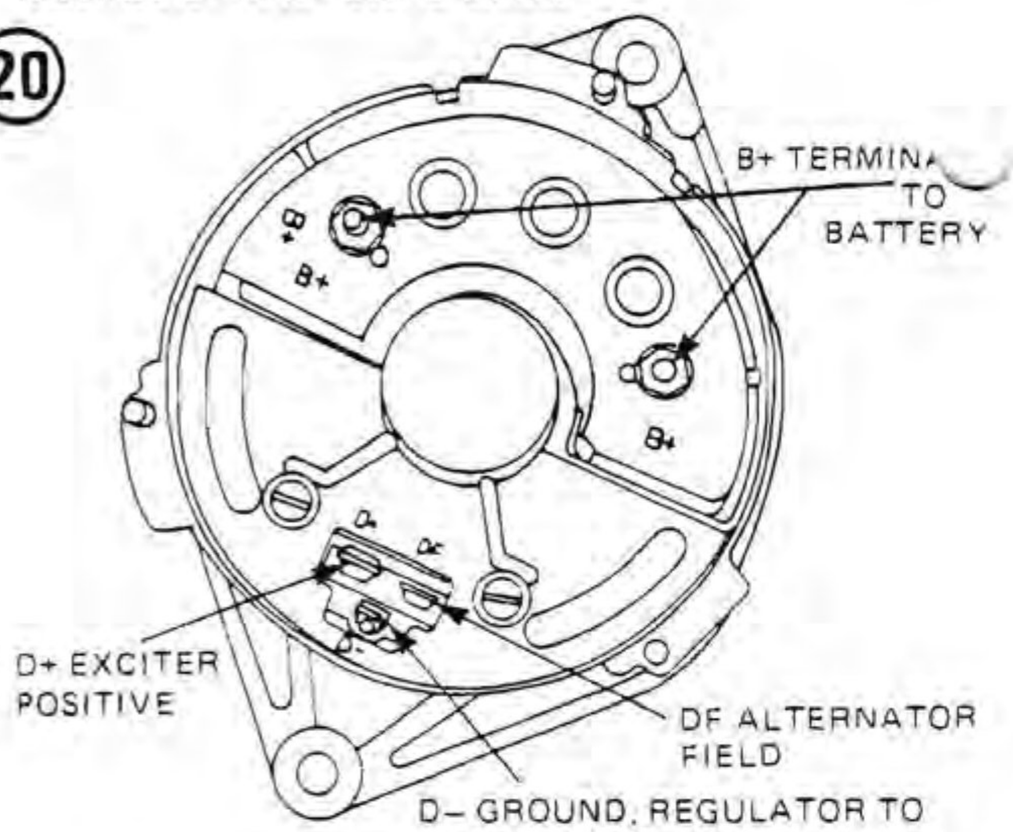

TYPICAL BOSCH EXCITER CIRCUIT

DO NOT CONFUSE EXCITER TERMINAL WITH FIELD TERMINAL

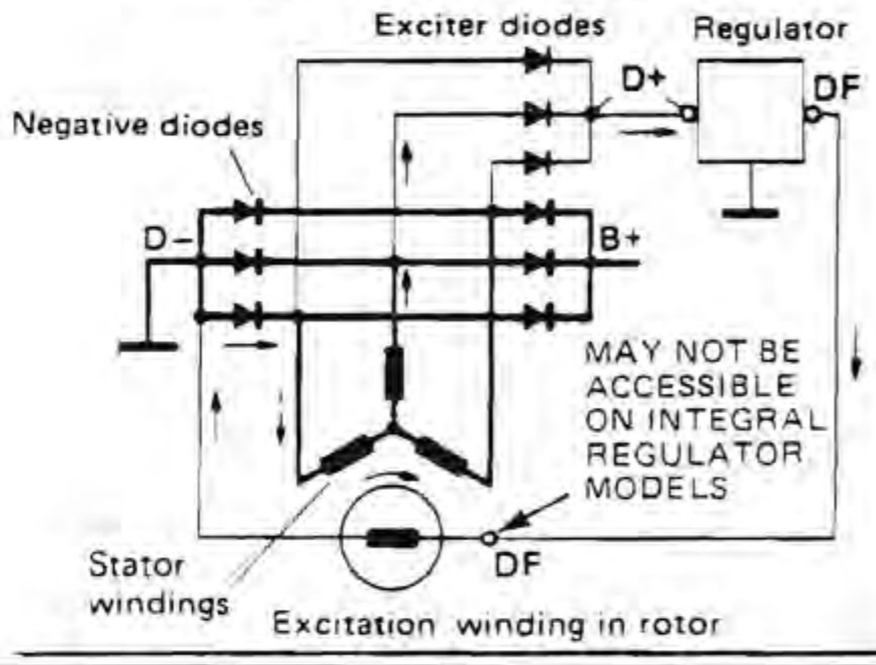

EARLY PORSCHE, VW – "B" CIRCUIT

Mounted Inside Fan Housing

(21)

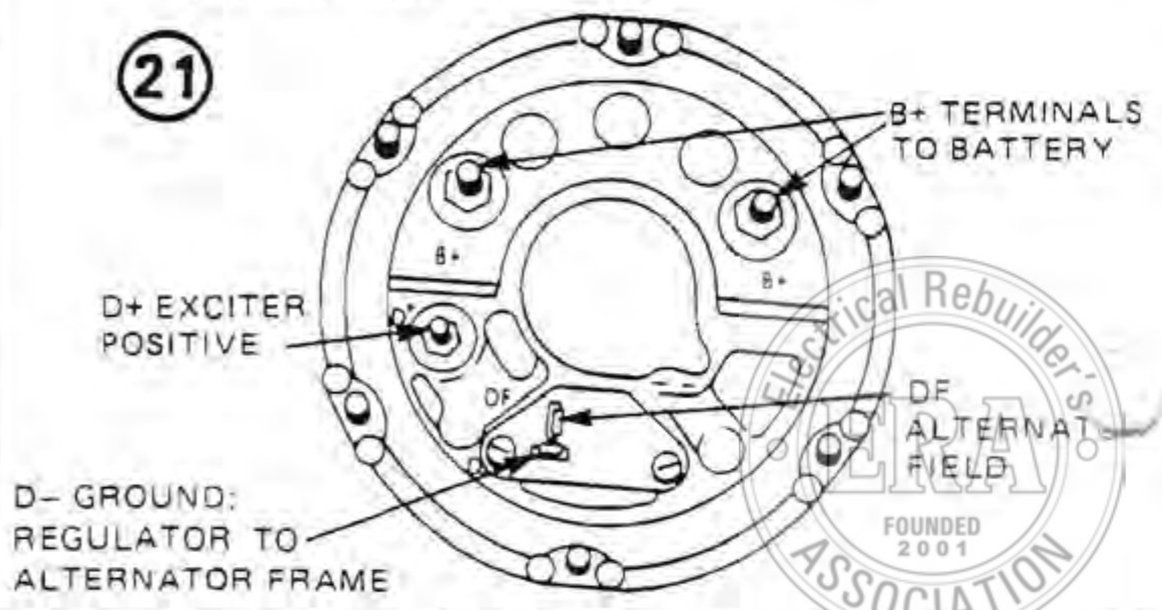

Electrical Rebuilder's Association FOUNDED 2001

HITACHI

SUBARU 1980 - 1984 – SPECIAL WIRING

(22)

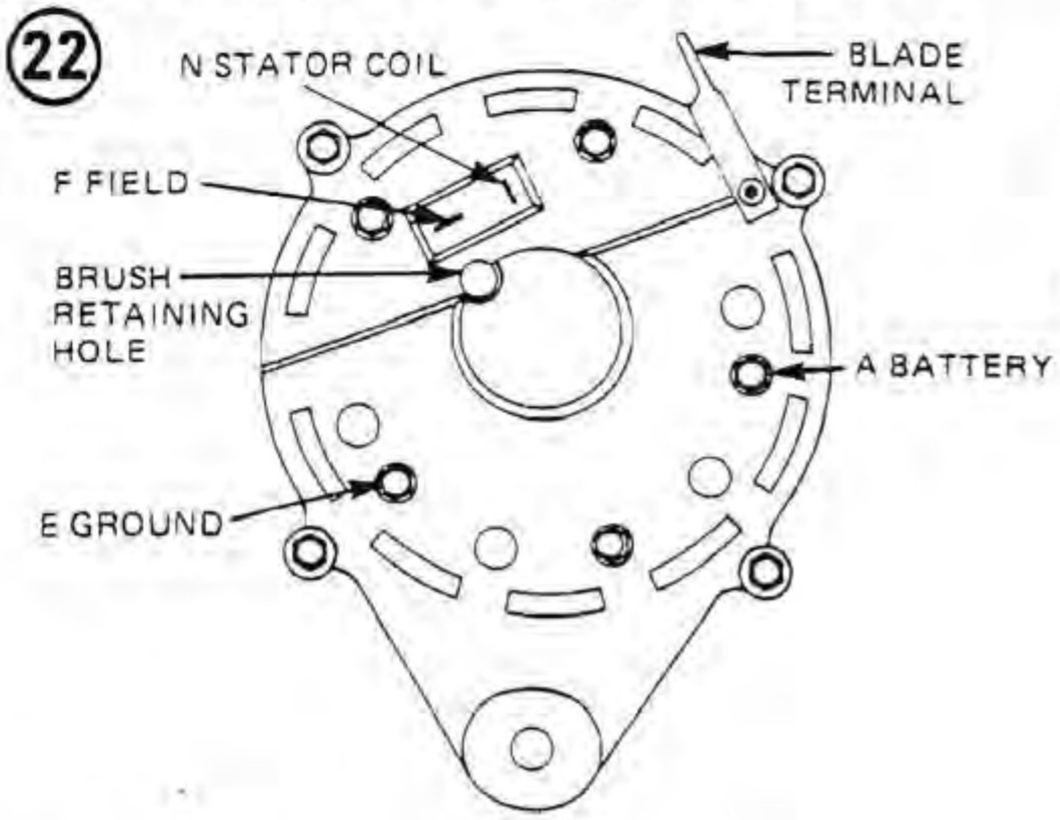

LATE MODEL NISSAN (DATSUN) – SPECIAL WIRING

(24)

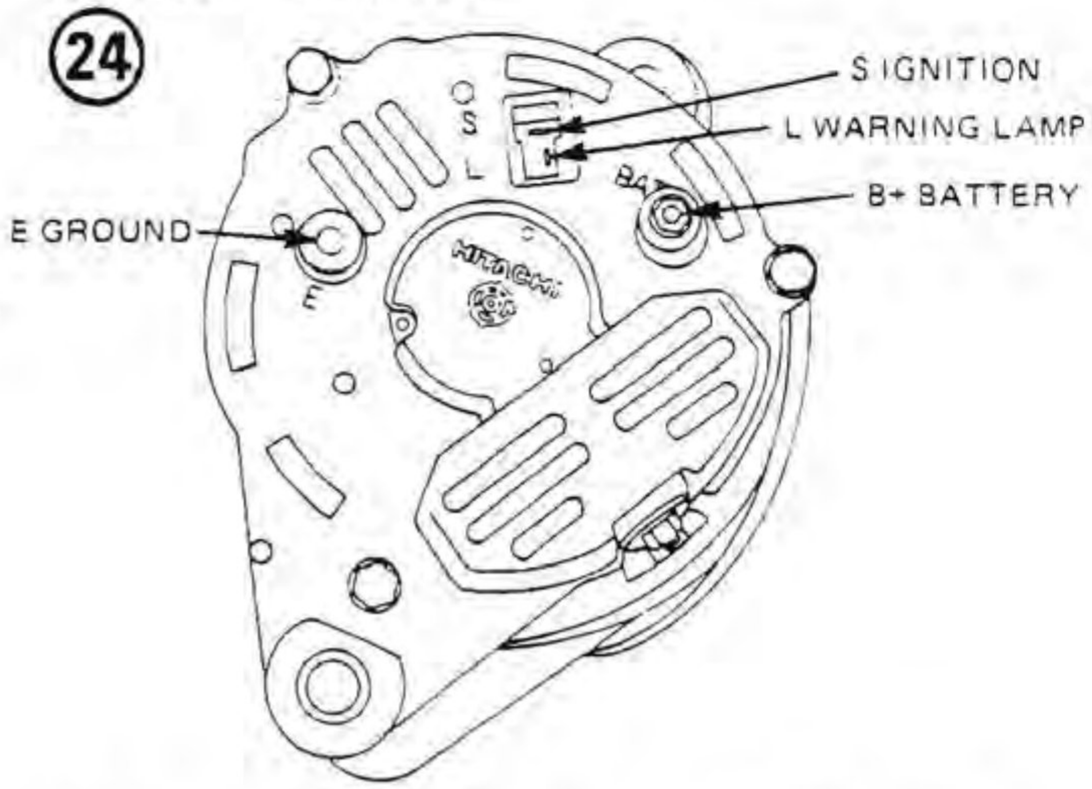

SUBARU 1977 - 1984, HONDA 1978 - 1984 – SPECIAL WIRING

(23)

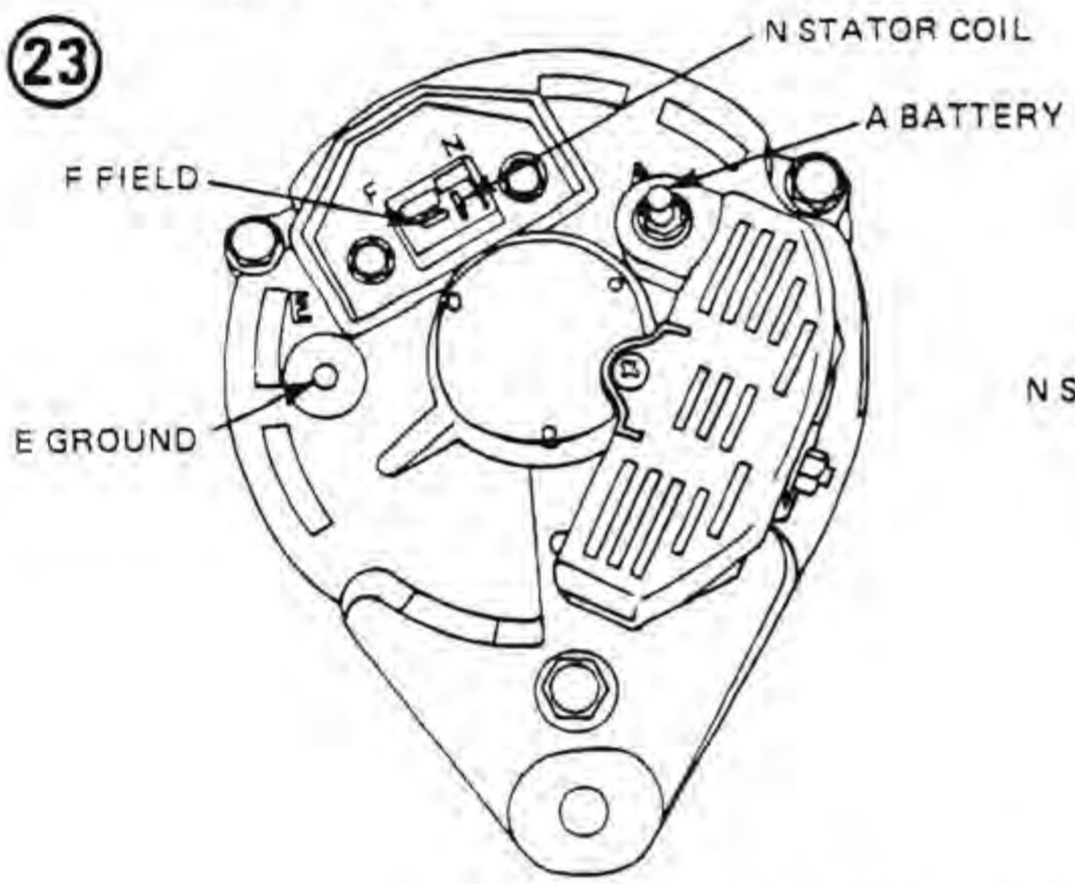

SUBARU 1980 - 1984, HONDA 1978 - 1984 – SPECIAL WIRING

(25)

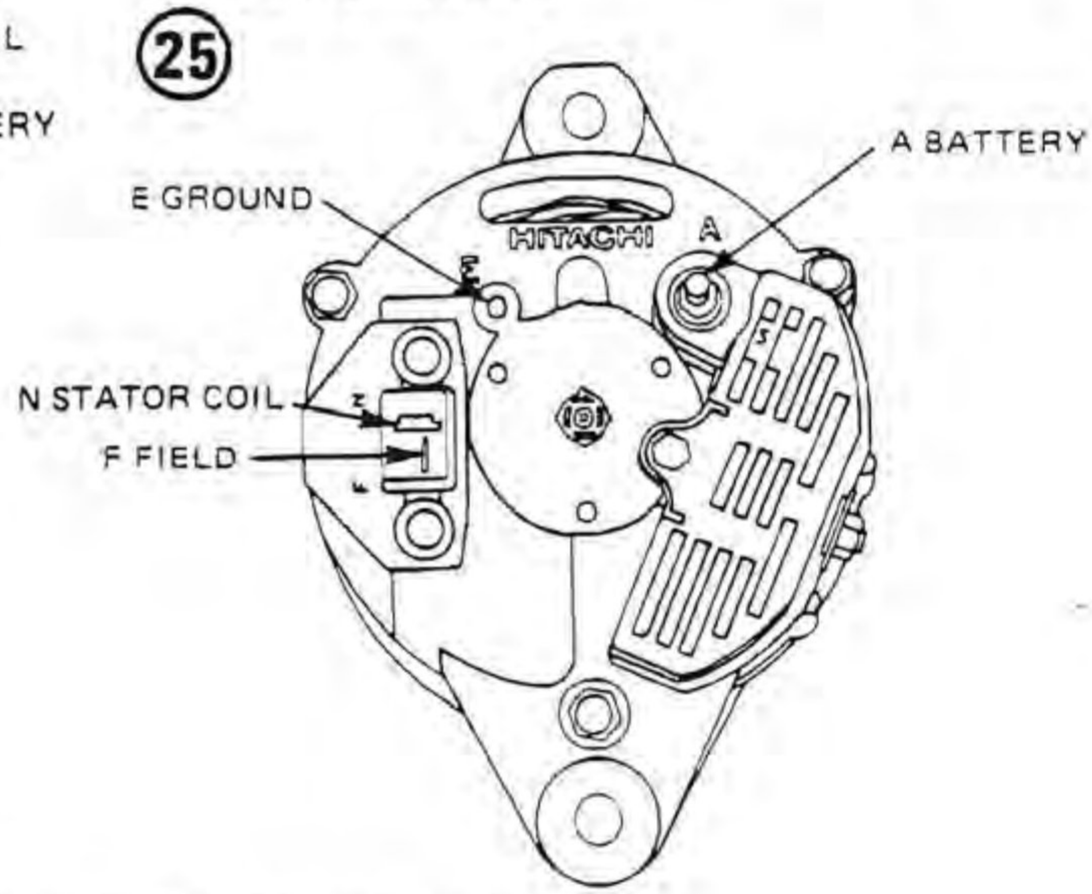

EARLY MODEL SUBARU – SPECIAL WIRING

(26)

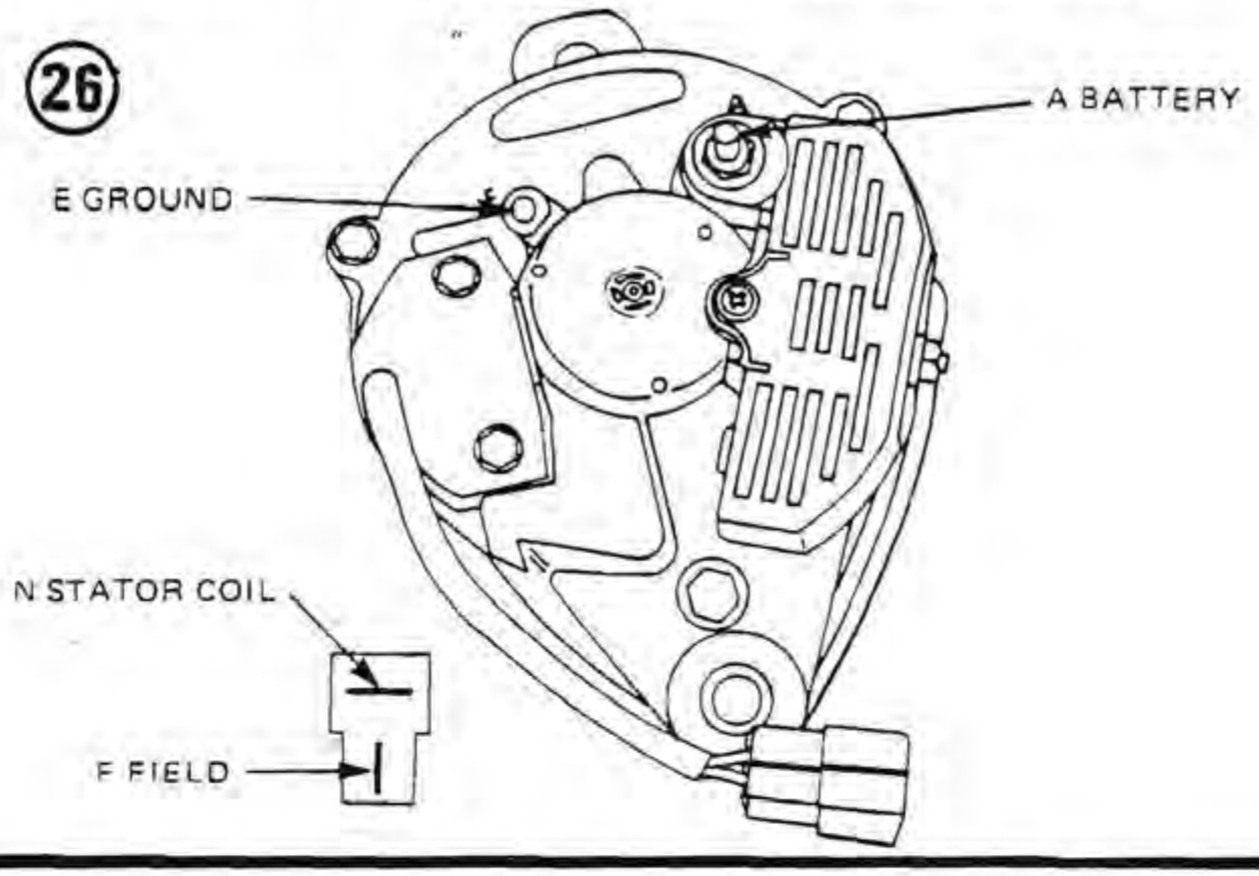

Electrical Rebuilder's ERA FOUNDED 2001 ASSOCIATION

LUCAS

LATE MODEL BRITISH LEYLAND – "A" CIRCUIT

(27)

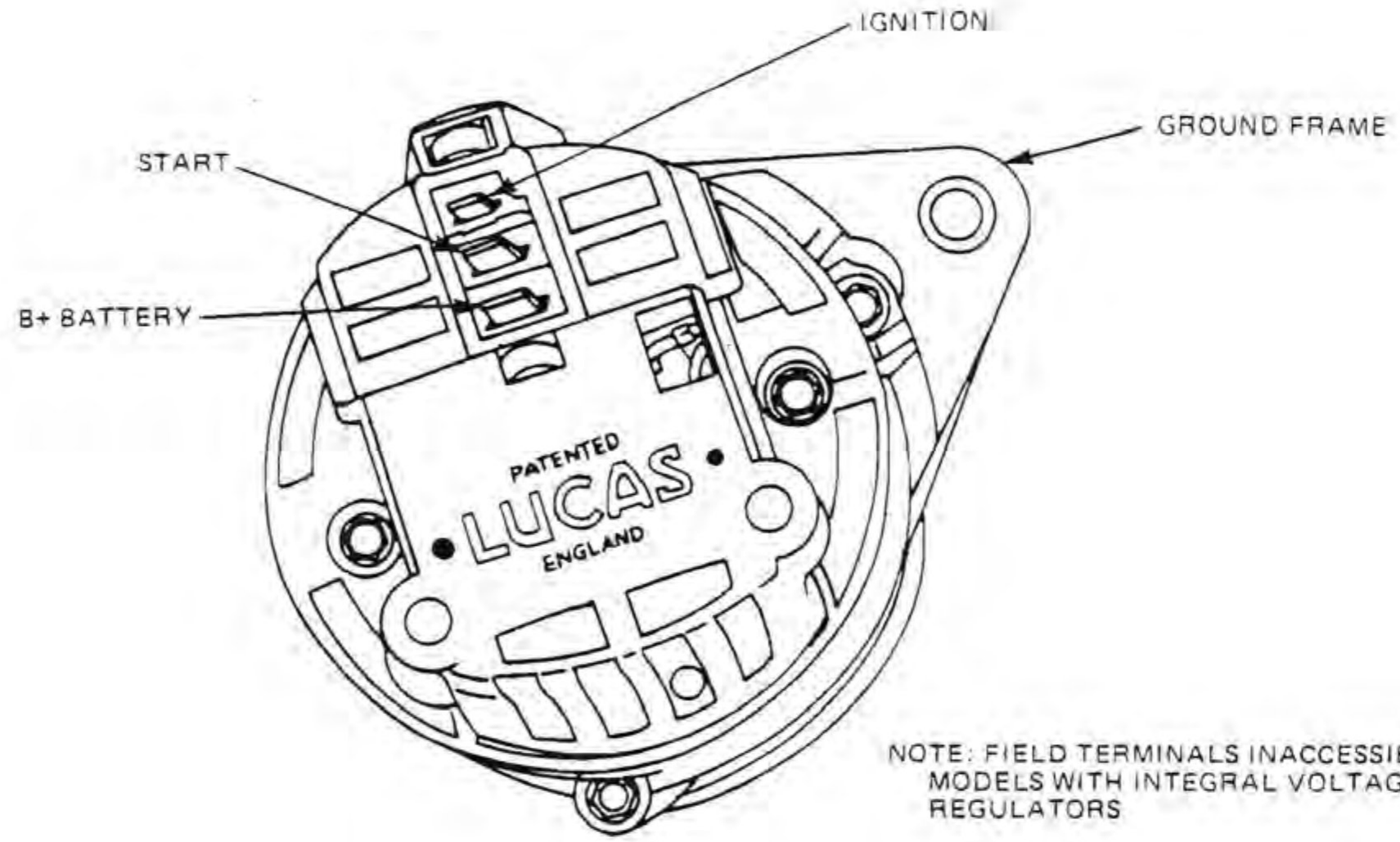

NOTE: FIELD TERMINALS INACCESSIBLE ON MODELS WITH INTEGRAL VOLTAGE REGULATORS

EARLY MODEL BRITISH LEYLAND – "A" CIRCUIT

Applies to 15, 16 and 17 ACR Alternators

(28)

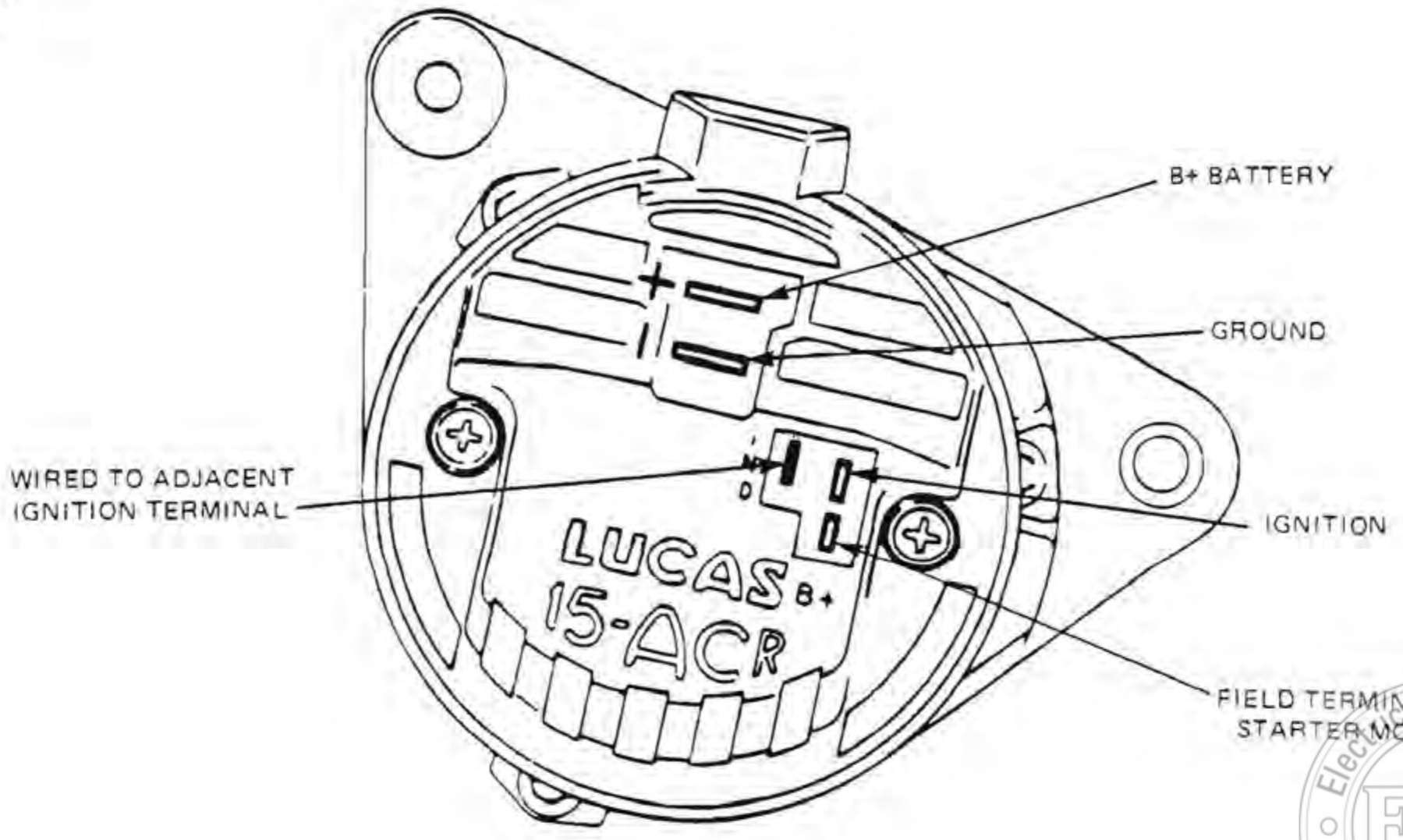

Electrical Rebuilder's ERA FOUNDED 2001 ASSOCIATION

MITSUBISHI

CHRYSLER MMC PRODUCTS 1979 - 1984 – "A" CIRCUIT

(29)

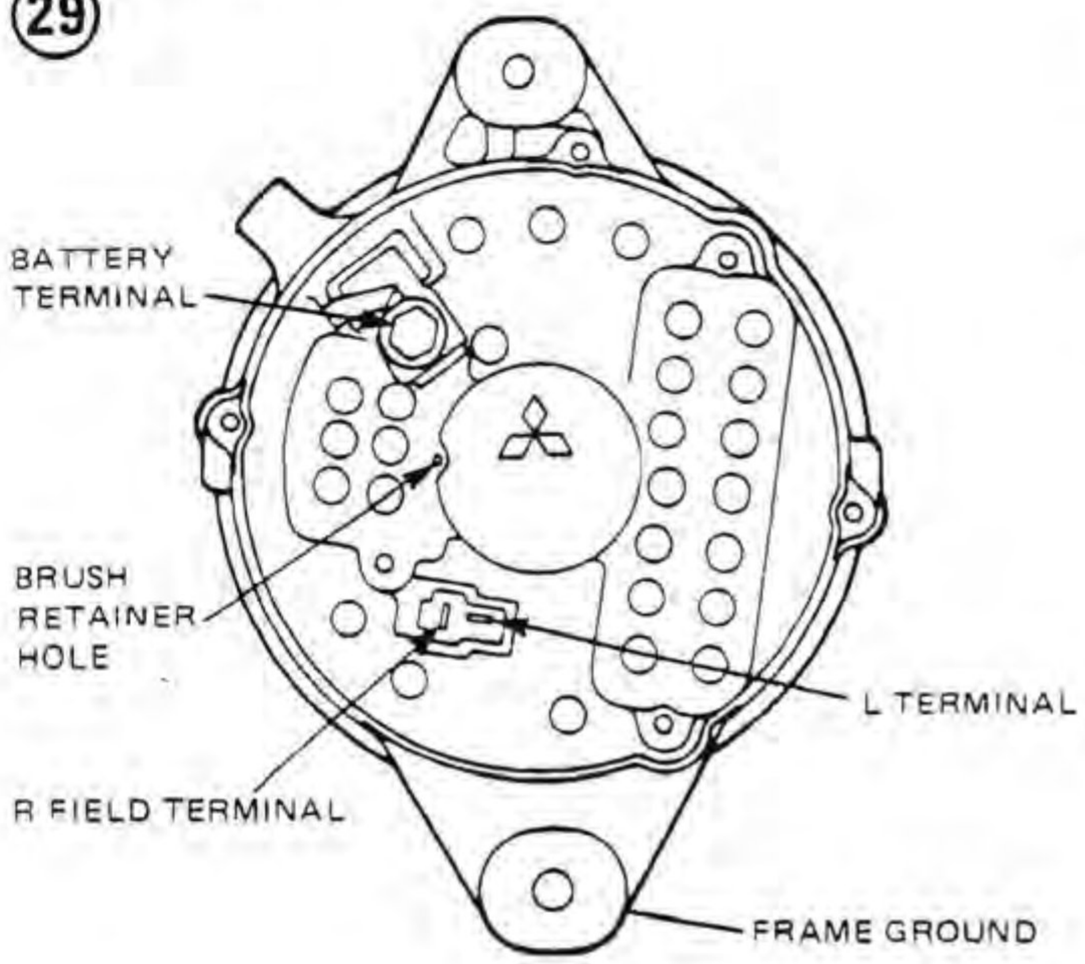

MAZDA, CHRYSLER MMC PRODUCTS – "B" CIRCUIT

(31)

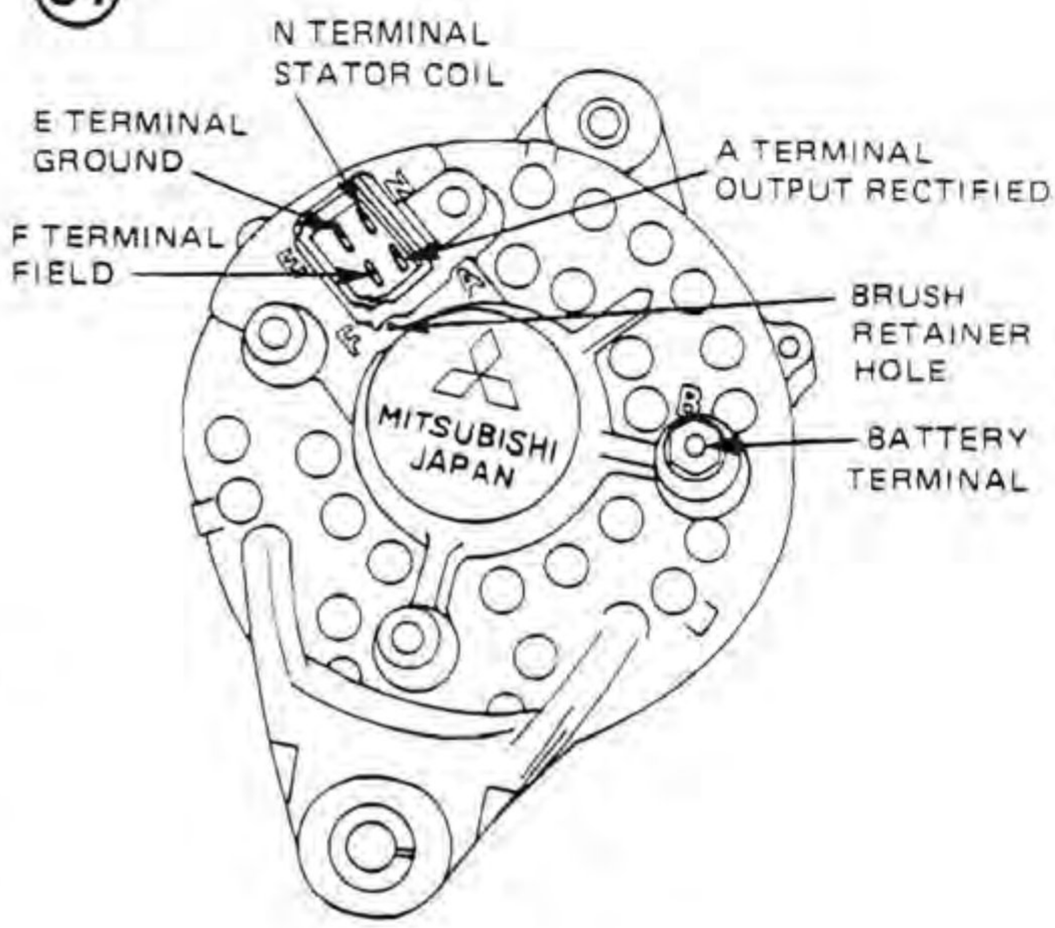

CHRYSLER MMC PRODUCTS 1982 - 1984 – "A" CIRCUIT

(30)

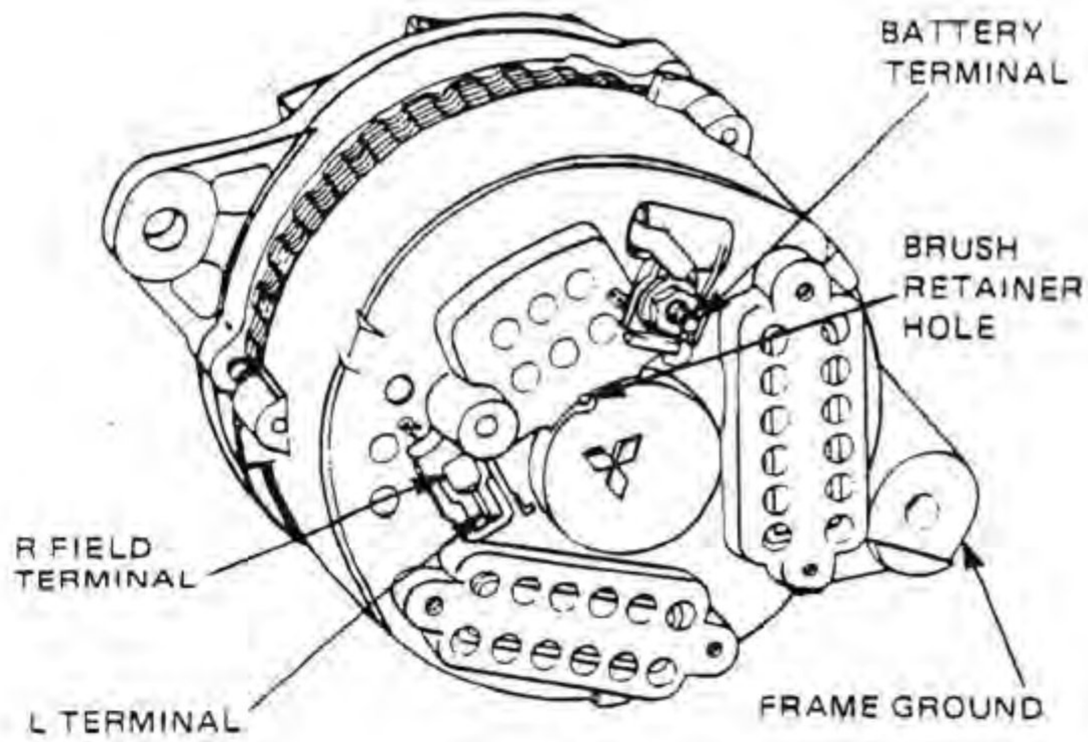

MAZDA, CHRYSLER MMC PRODUCTS – "B" CIRCUIT

(32)

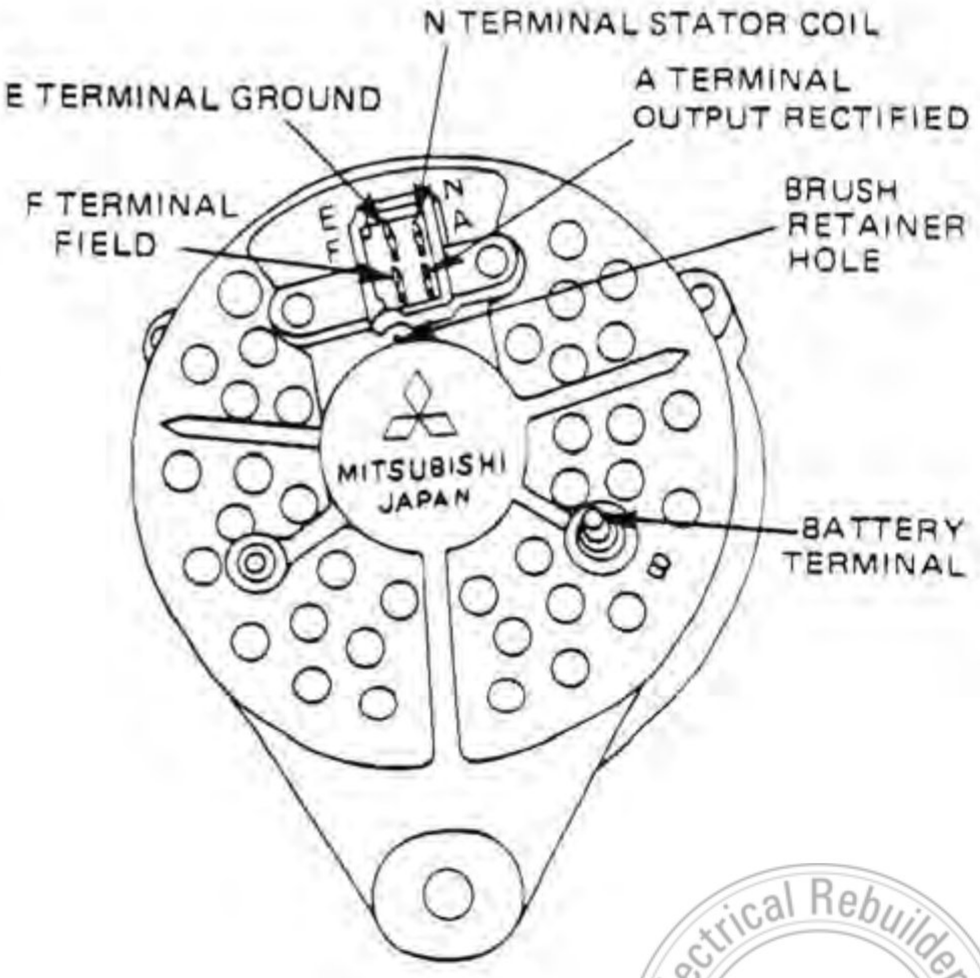

Electrical Rebuilder's ERA FOUNDED 2001 ASSOCIATION

MOTOROLA

VW, AUDI, MERCEDES, PORSCHE 1975 - 1984
VOLVO 1978 - 1984 – "A" CIRCUIT

(33)

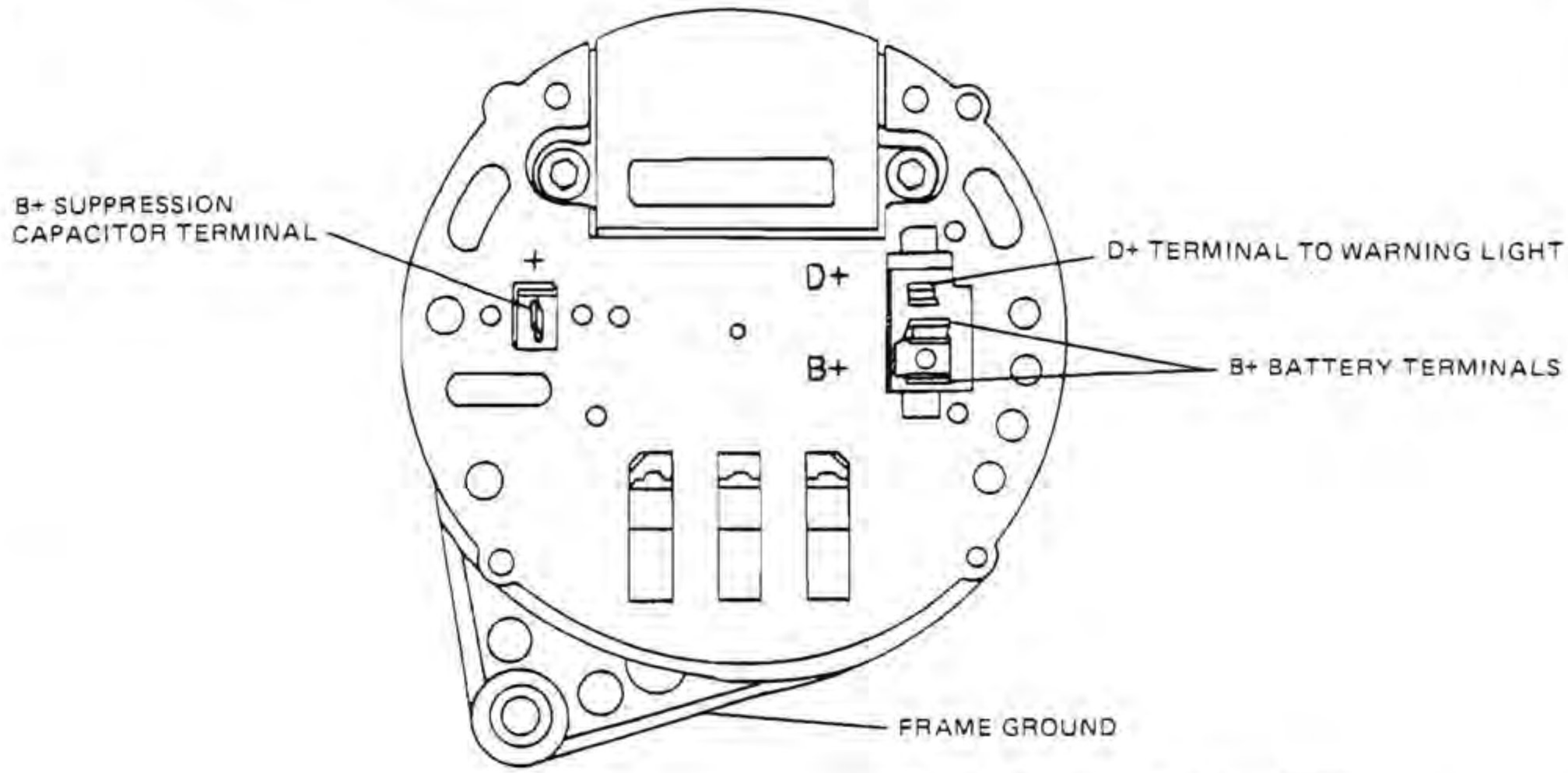

NOTE: WITH REGULATOR REMOVED,
DF TERMINAL TO GREEN WIRE – FIELD
D+ TERMINAL TO RED WIRE – EXCITER POSITIVE

VW, MERCEDES, AUDI, VOLVO 1975 - 1981
– "A" CIRCUIT

(34)

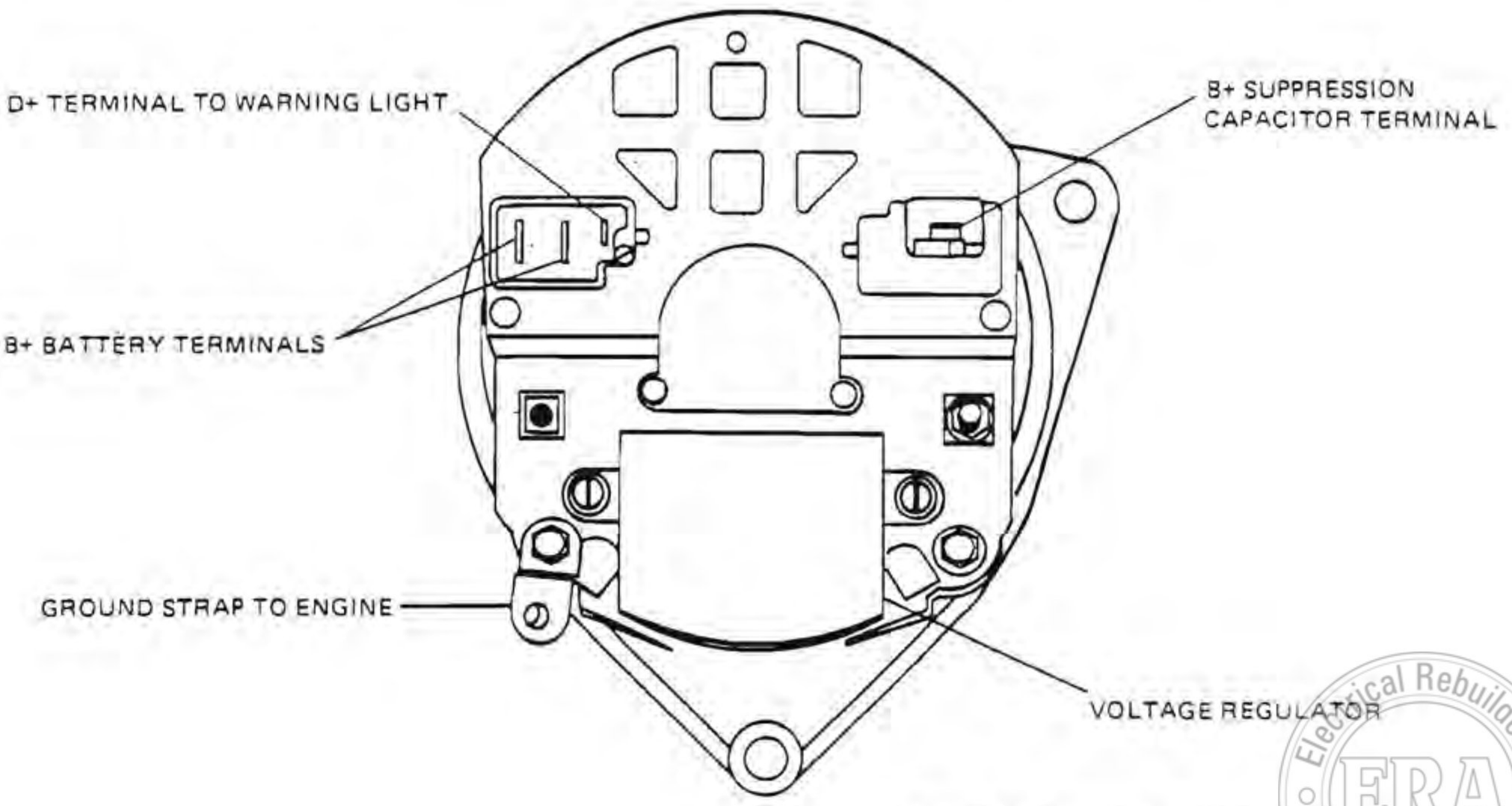

NOTE: WITH REGULATOR REMOVED,
DF TERMINAL TO GREEN WIRE – FIELD
D+ TERMINAL TO RED WIRE – EXCITER POSITIVE

Electrical Rebuilder's ERA FOUNDED 2001 ASSOCIATION

NIPPONDENSO

TOYOTA, HONDA 1981 - 1984 – "B" CIRCUIT WHEN USED WITH MECHANICAL REGULATOR; "A" CIRCUIT WHEN USED WITH IC REGULATOR

(35)

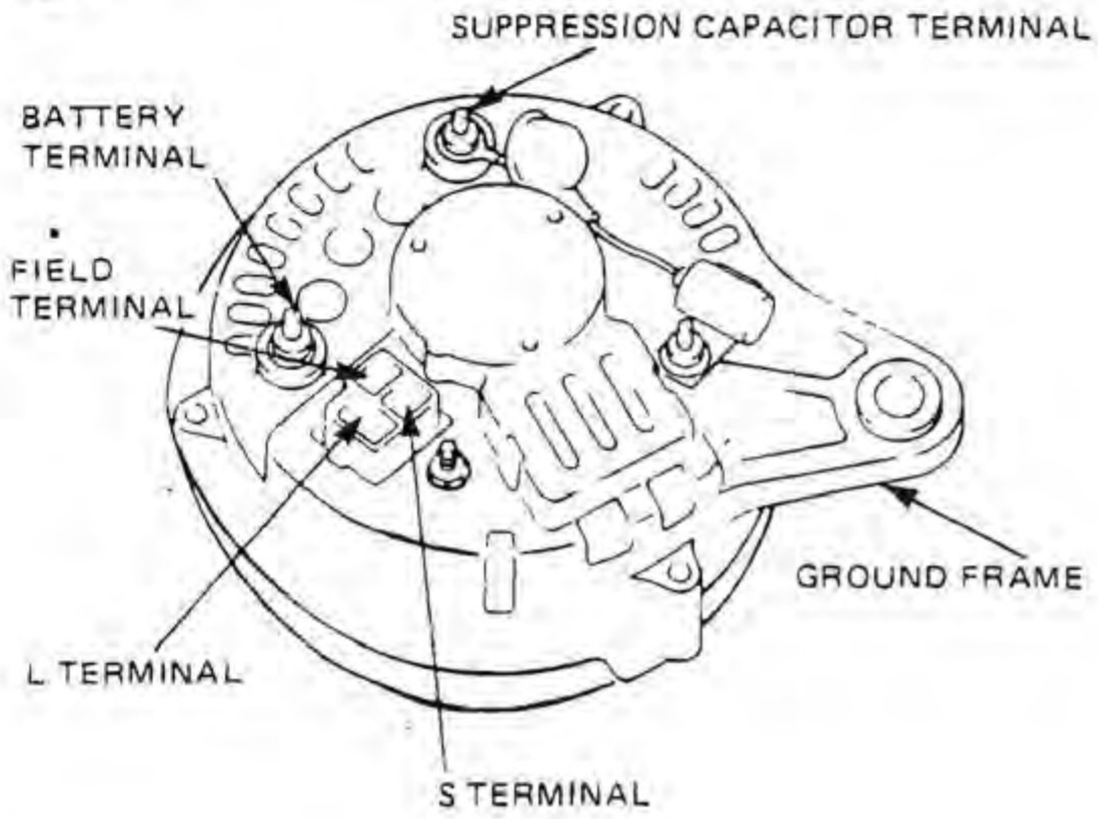

TOYOTA, HONDA 1979 - 1983 – "B" CIRCUIT WHEN USED WITH MECHANICAL REGULATOR; "A" CIRCUIT WHEN USED WITH IC REGULATOR

(36)

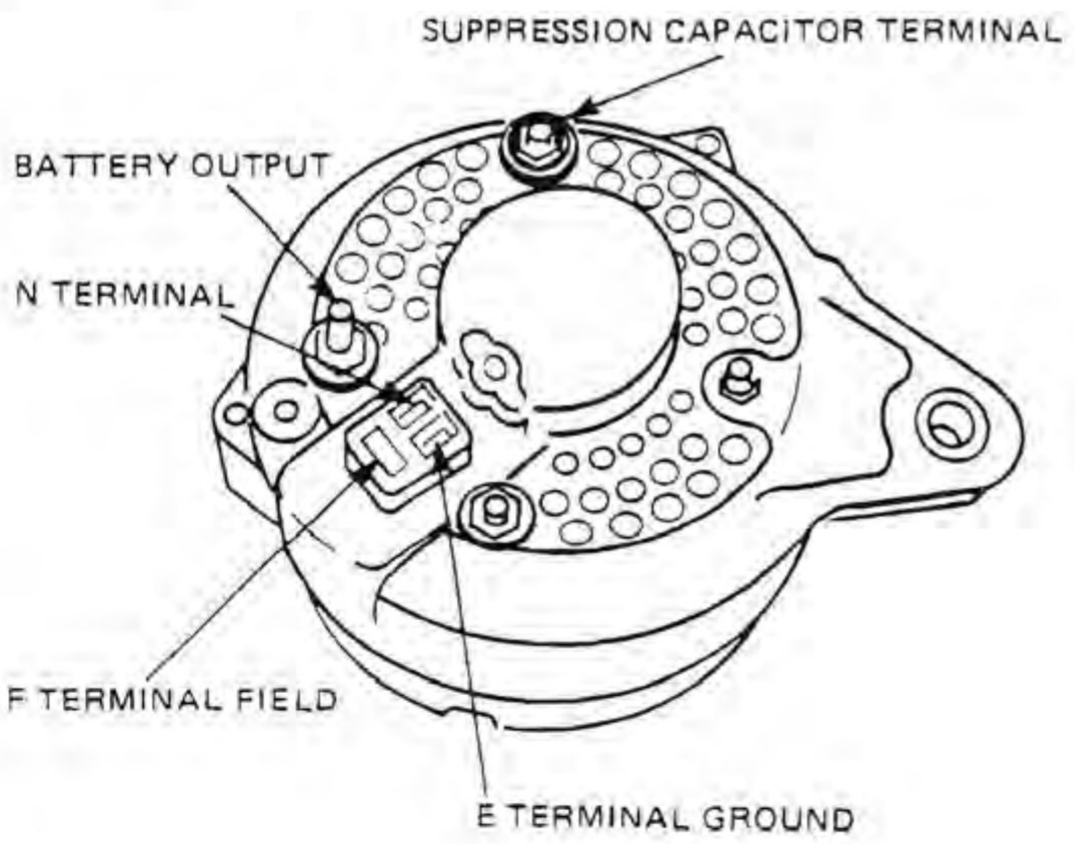

TOYOTA 1978 - 1984 – "B" CIRCUIT WHEN USED WITH MECHANICAL REGULATOR; "A" CIRCUIT WHEN USED WITH IC REGULATOR

(37)

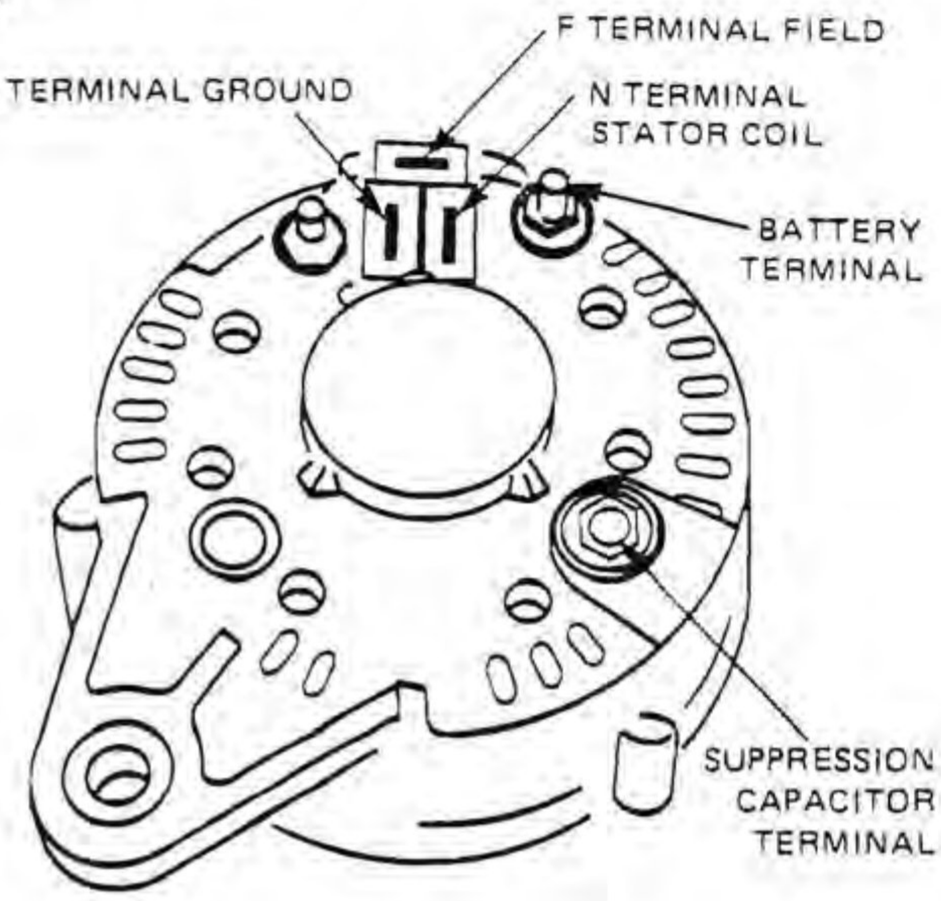

TOYOTA 1978 - 1984 – "B" CIRCUIT WHEN USED WITH MECHANICAL REGULATOR; "A" CIRCUIT WHEN USED WITH IC REGULATOR

(38)

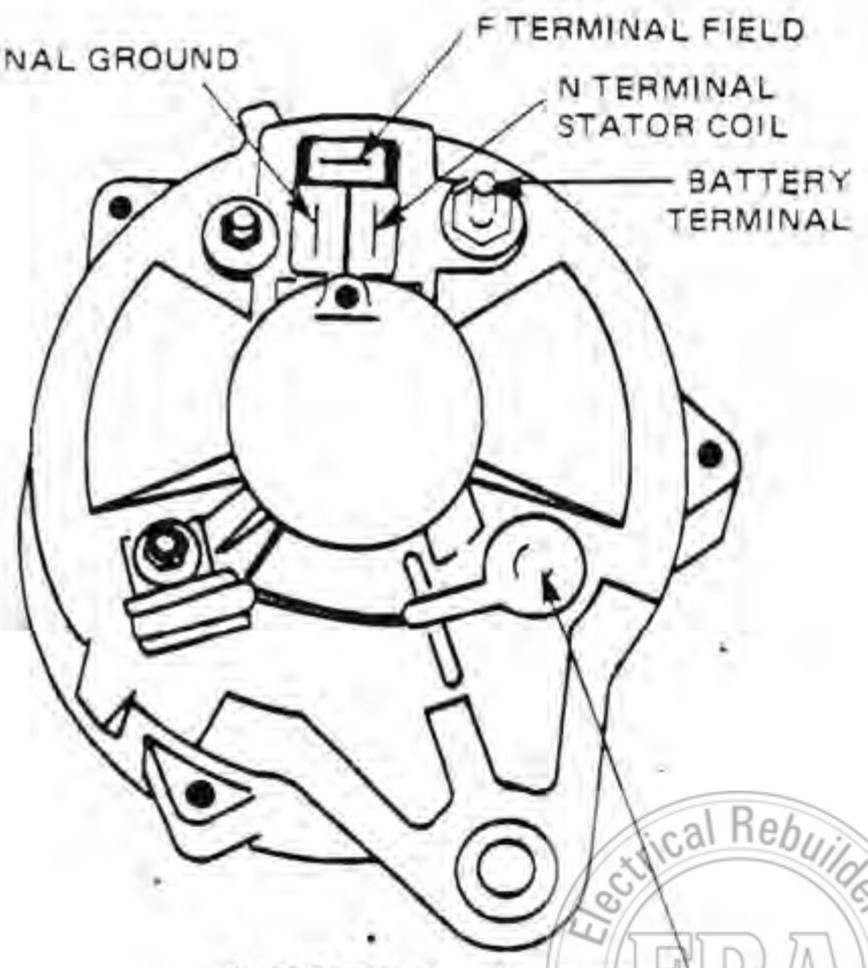

Electrical Rebuilder's ERA FOUNDED 2001 ASSOCIATION

NIPPONDENSO

TOYOTA, HONDA 1980 - 1984 – "A" CIRCUIT

Shown with IC Regulator Removed

39

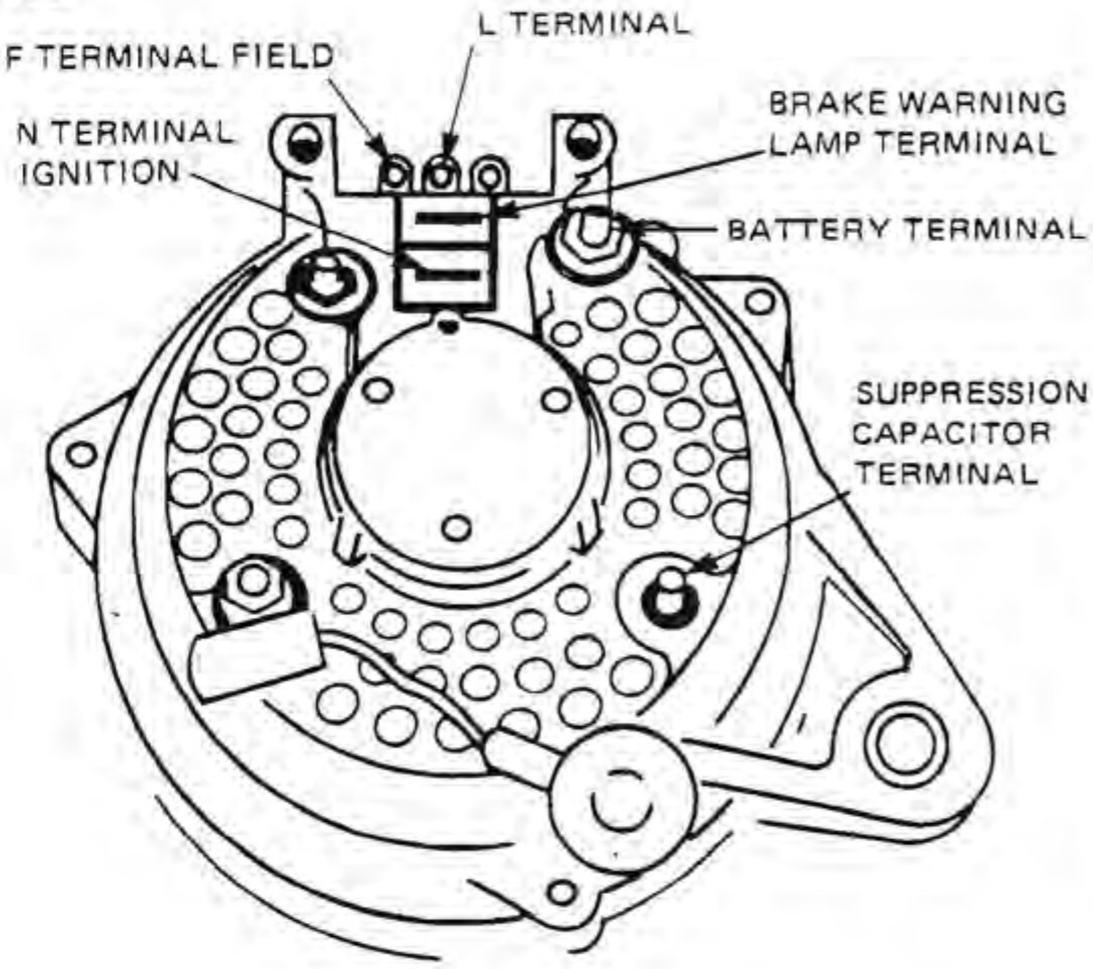

CHRYSLER MMC PRODUCTS 1976 - 1979 – "B" CIRCUIT

41

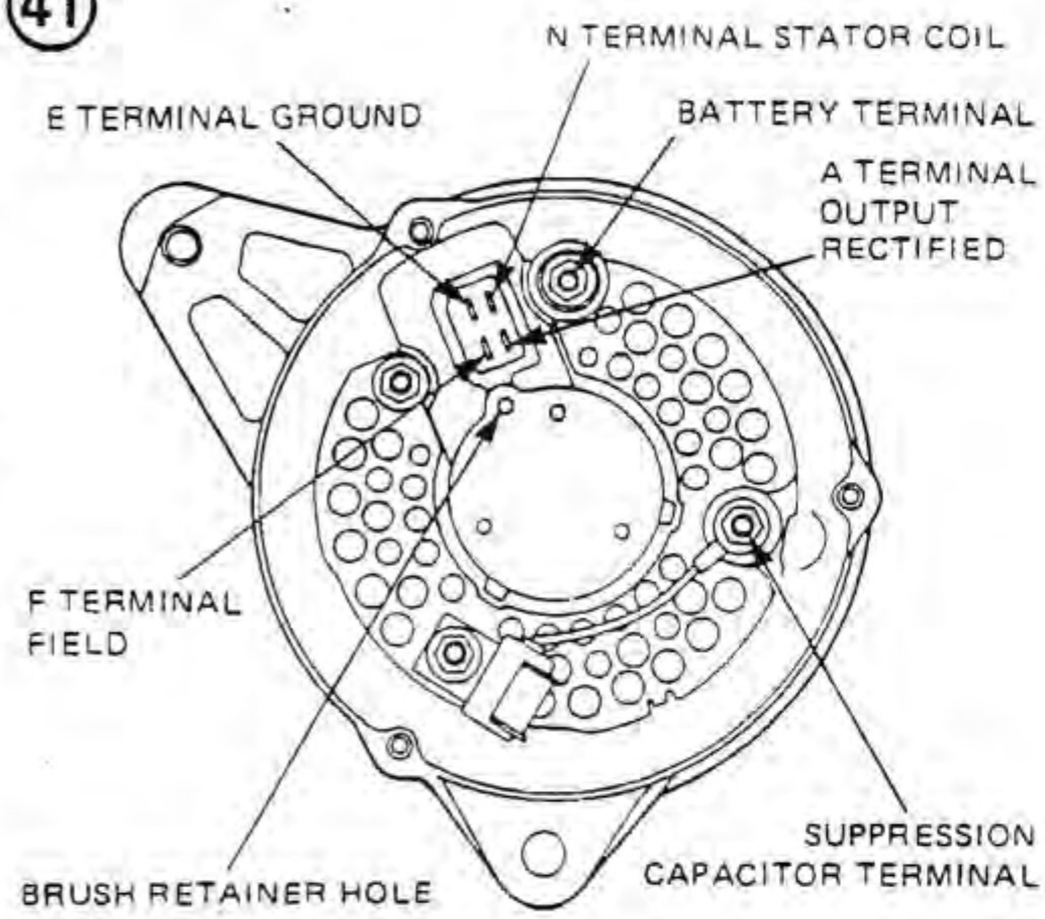

EARLY HONDA, TOYOTA – "B" CIRCUIT

40

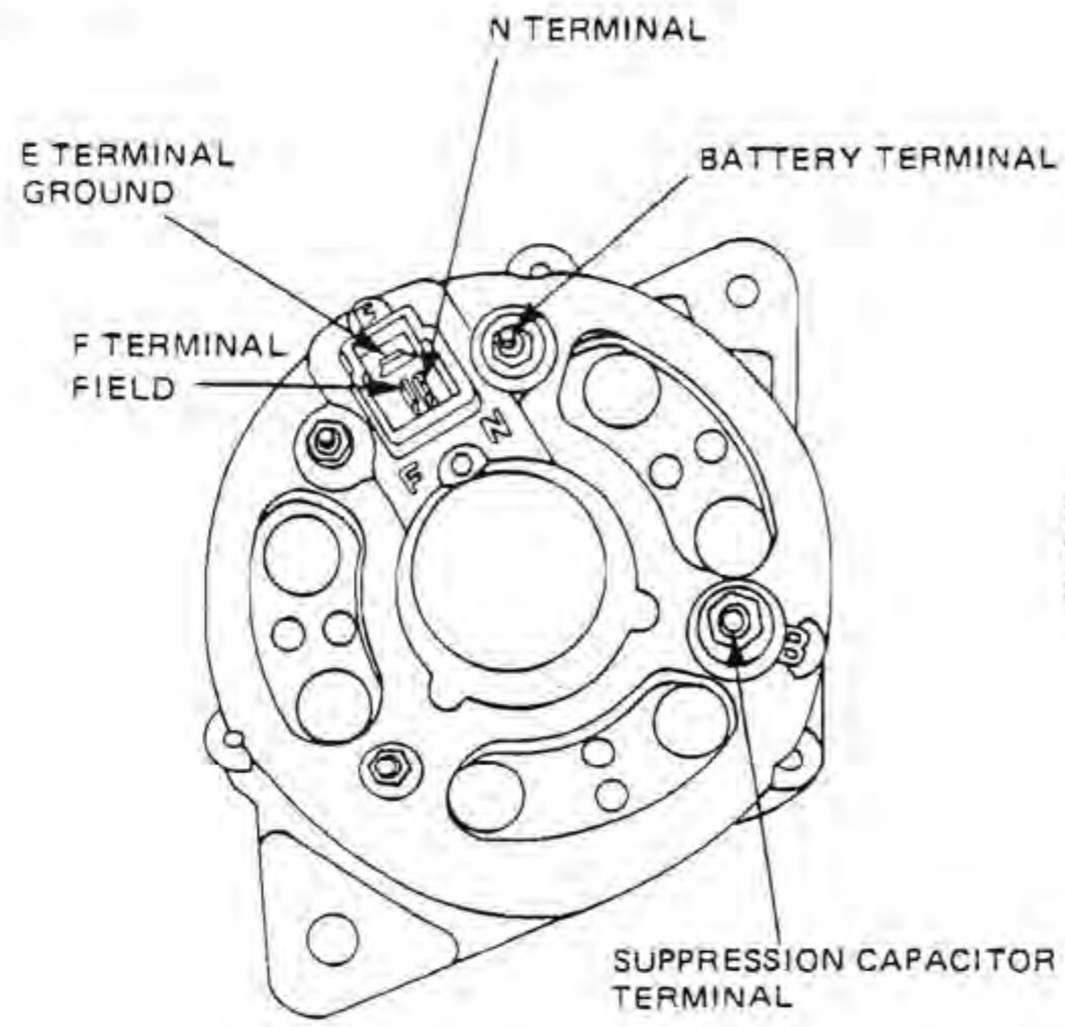

SOME CHRYSLER MMC PRODUCTS – "A" CIRCUIT

42

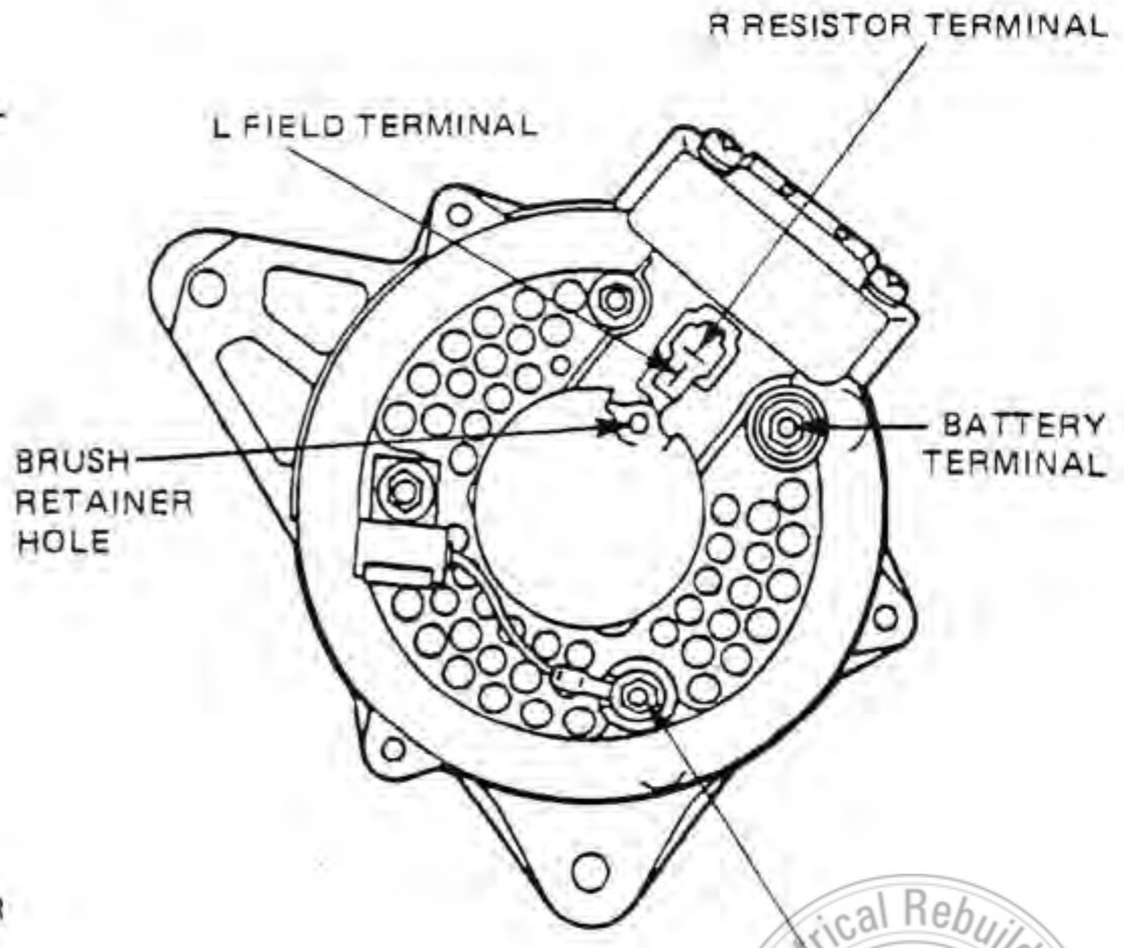

Electrical Rebuilder's ERA FOUNDED 2001 ASSOCIATION

NISSAN

NISSAN (DATSUN) WITH GASOLINE ENGINES – "A" CIRCUIT

(43)

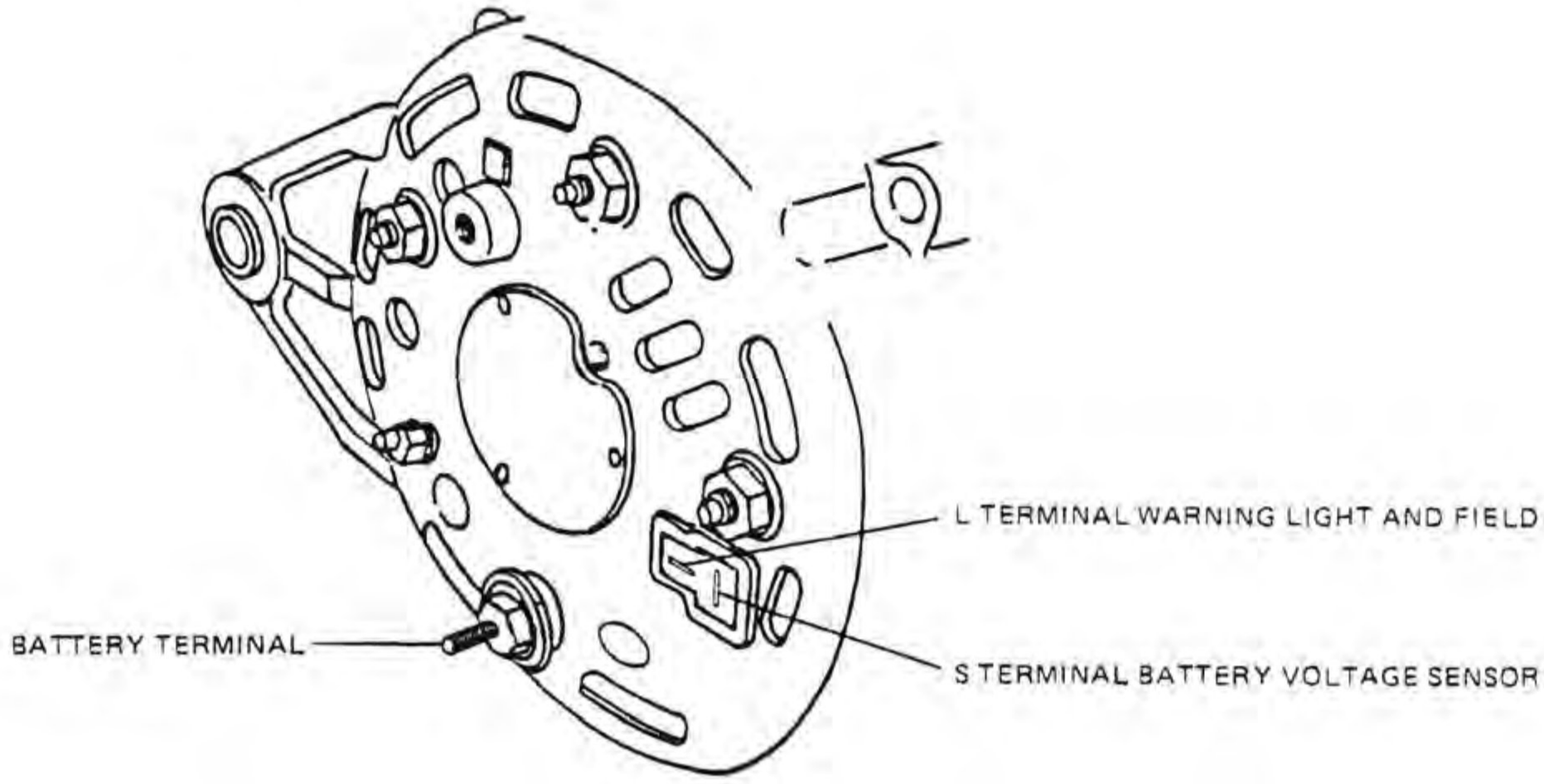

NISSAN (DATSUN) WITH DIESEL ENGINES – "A" CIRCUIT

(44)

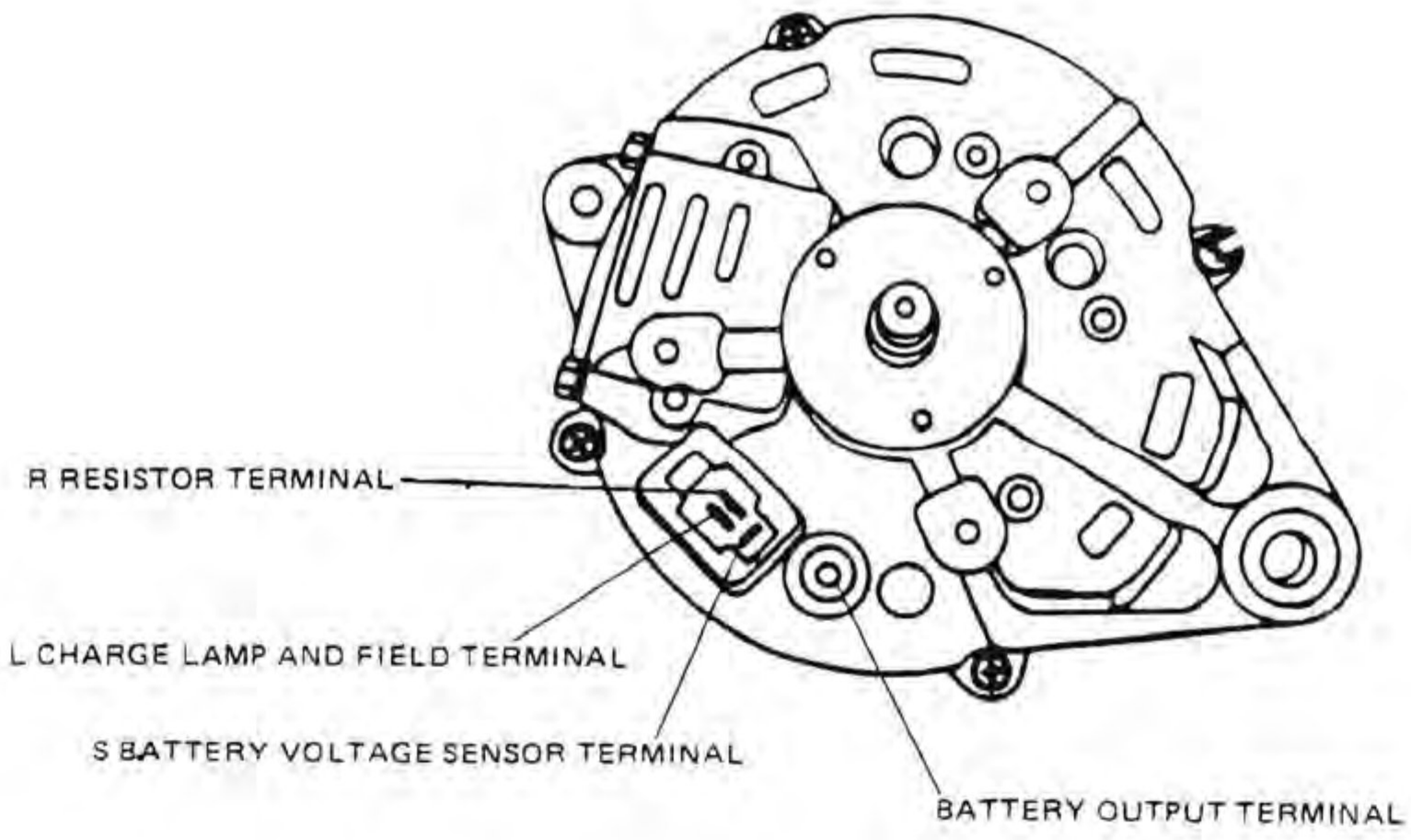

Electrical Rebuilder's ERA FOUNDED 2001 ASSOCIATION


Electrical Rebuilder's
ERA
FOUNDED
2001
ASSOCIATION

MONOPHASE (2 DIODES), (6 DIODES)

TRIPHASE (6 DIODES), (9 DIODES)

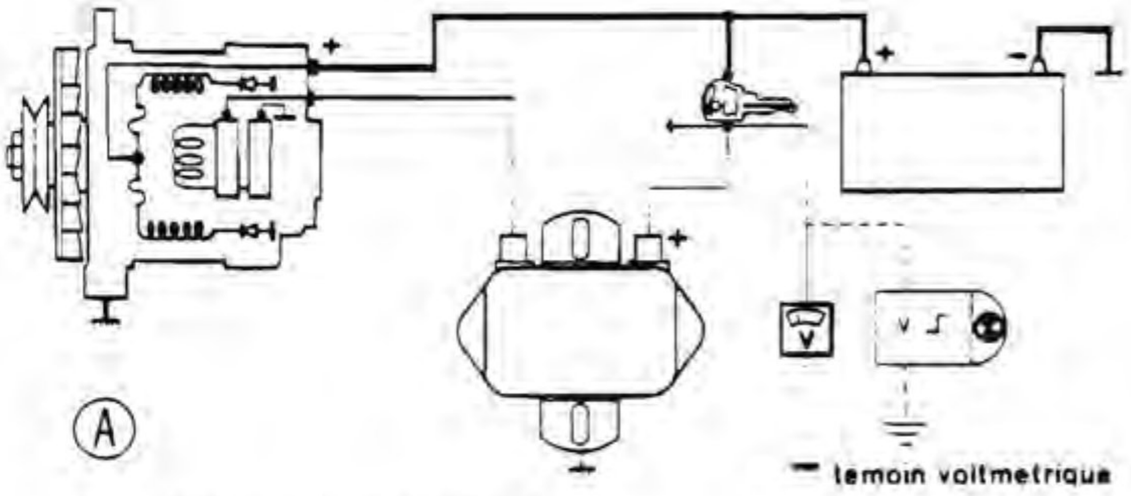

Ⓐ

MONOPHASE (2 DIODES)

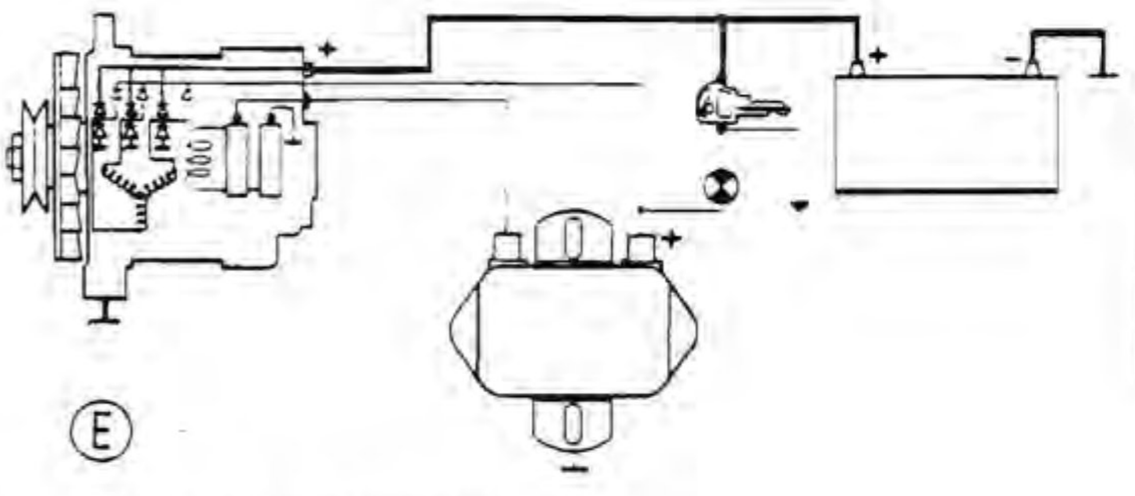

Ⓔ

TRIPHASE (9 DIODES)

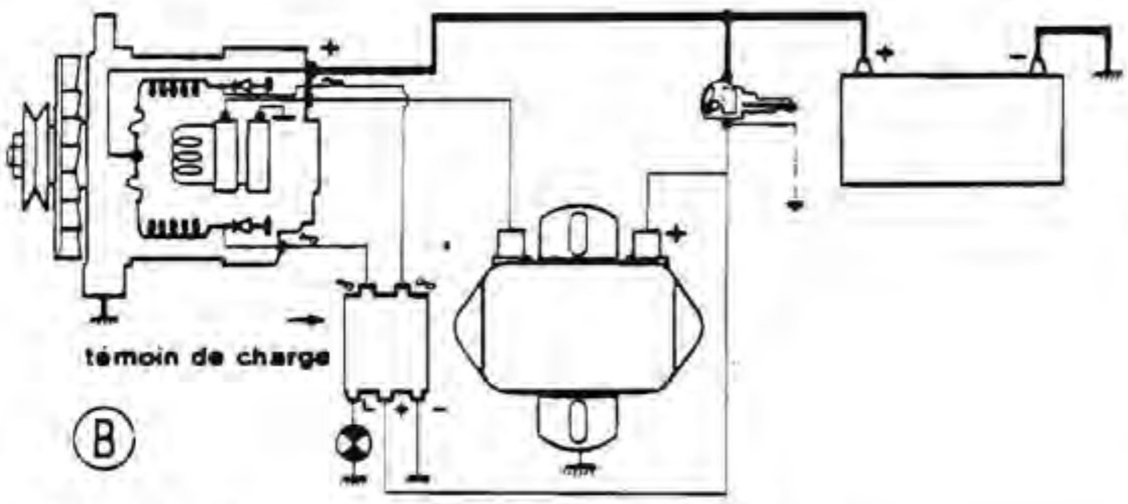

Ⓑ

MONOPHASE (2 DIODES)

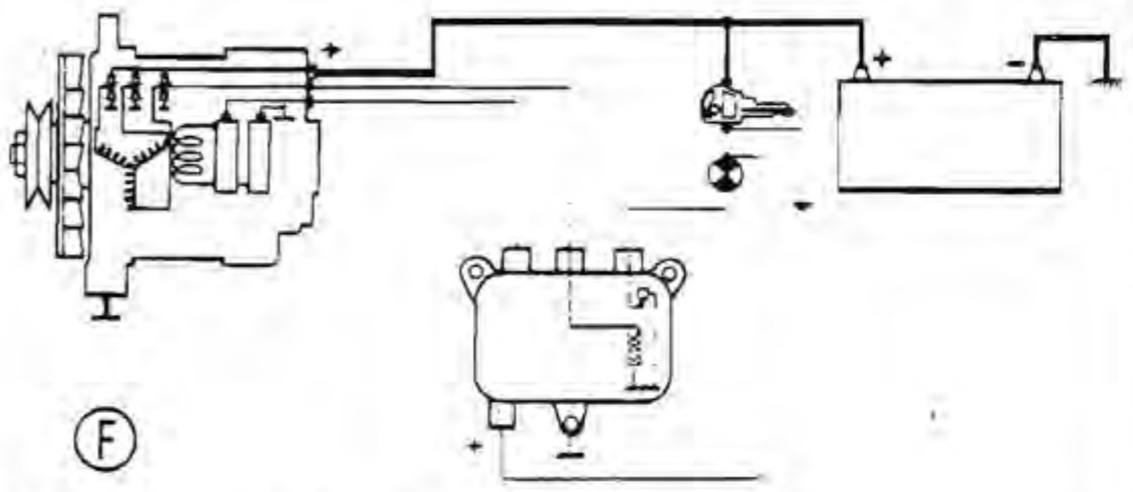

Ⓕ

TRIPHASE (6 DIODES)

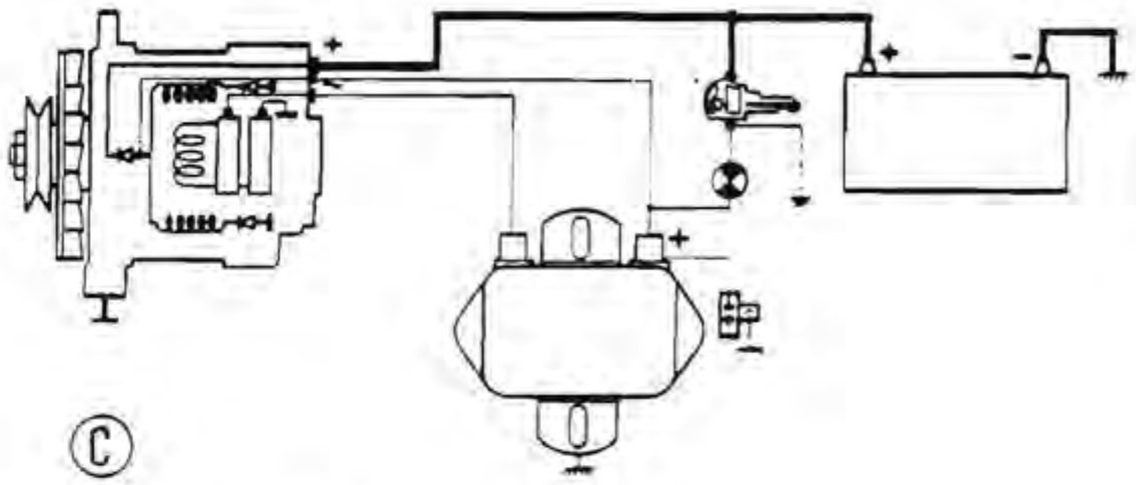

Ⓒ

MONOPHASE (3 DIODES)

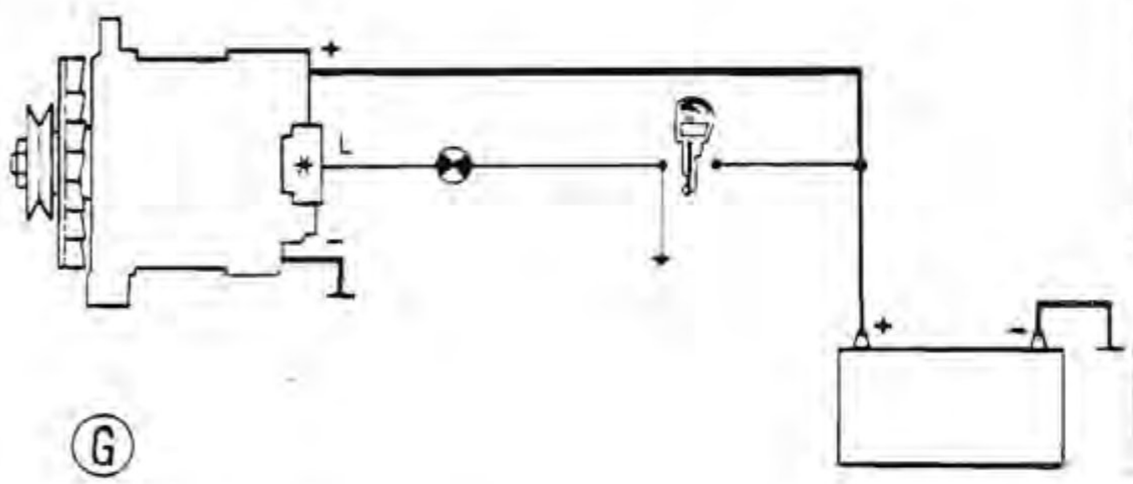

Ⓖ

TRIPHASE (9 DIODES)

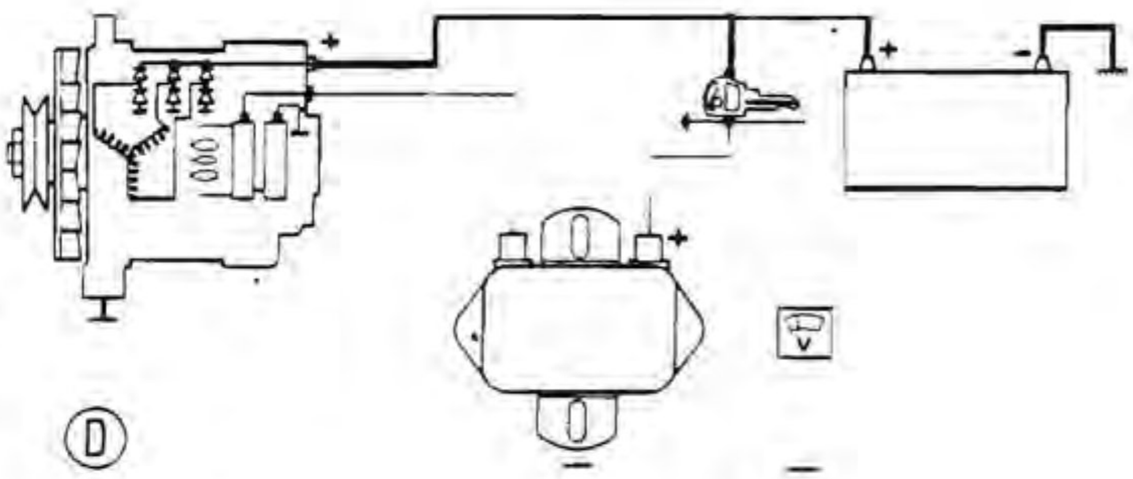

Ⓓ

TRIPHASE (6 DIODES)

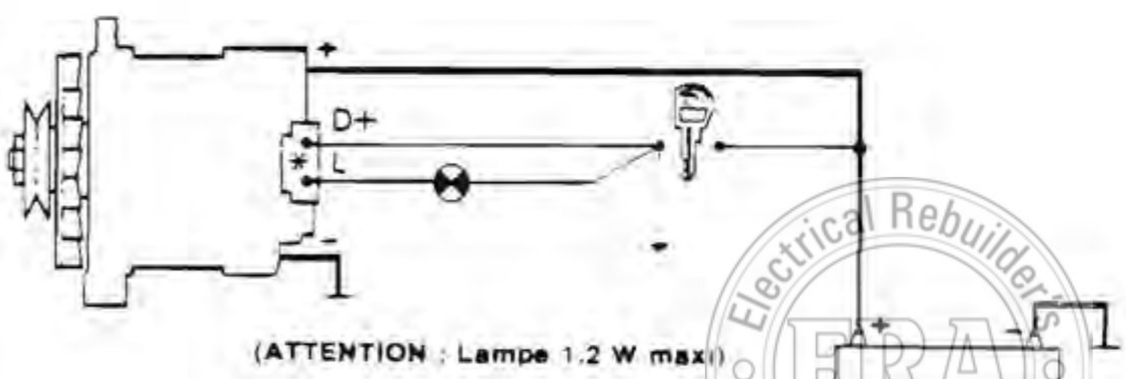

Ⓗ **TRIPHASE (6 DIODES)**

Ⓗ1 **MONOPHASE (2 DIODES)**

Electrical Rebuilders ERA FOUNDED 2001 ASSOCIATION

Electrical Rebuilder's
ERA
FOUNDED
2001
ASSOCIATION