STATOR QUALIFIER
P/N 200917

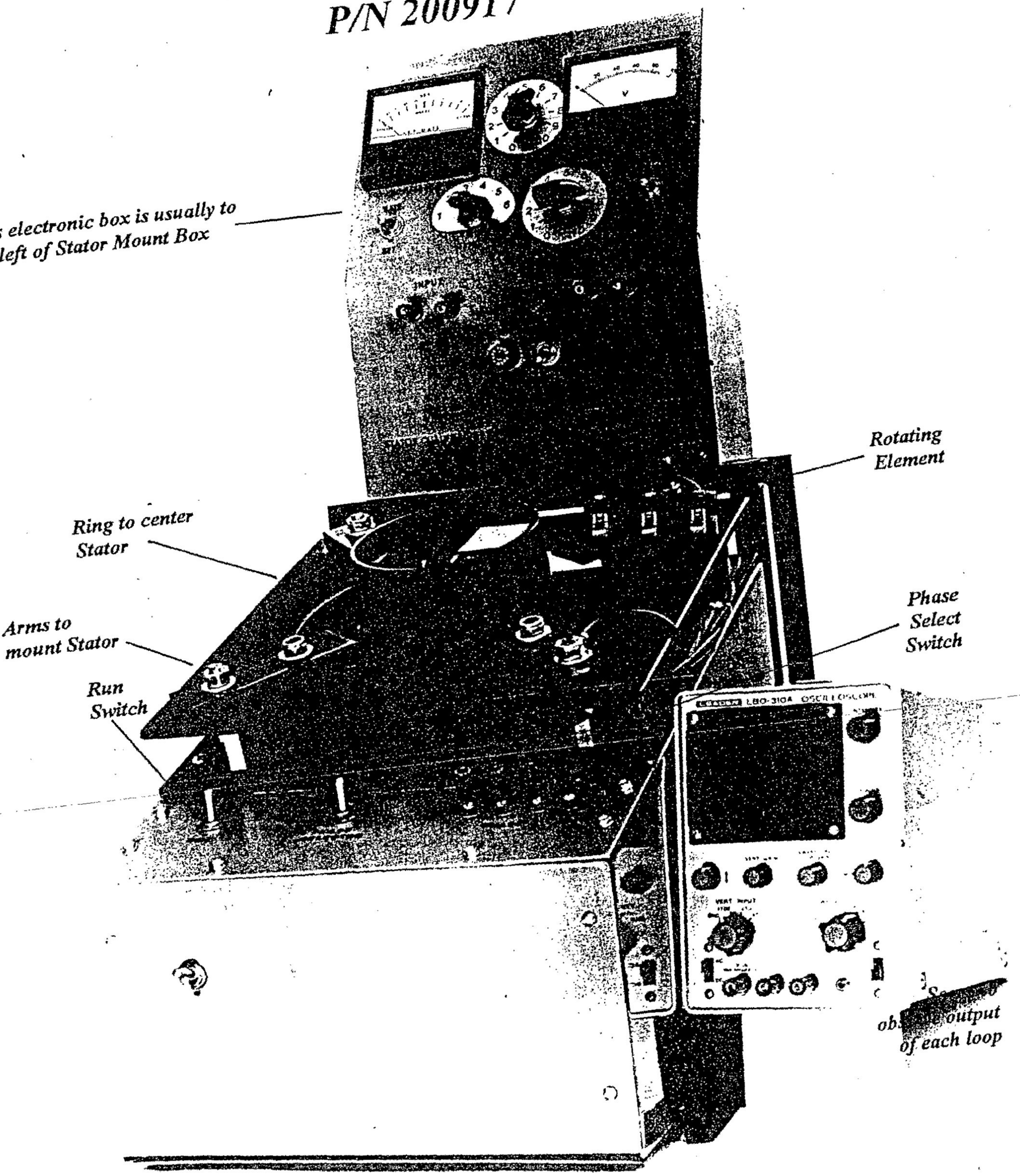

STATOR QUALIFIER

THEORY

The tester is our shorted coil detector system rotating within the stator. Therefore all coils of a stator are scanned at 800 times per minute.

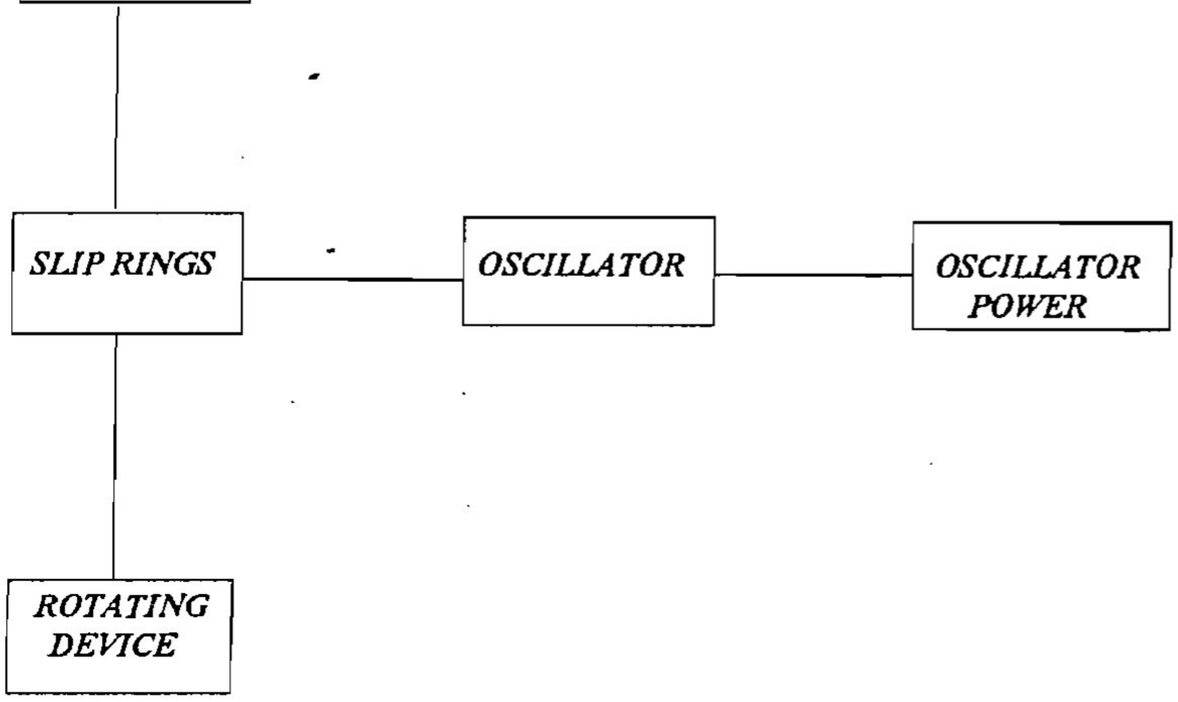

Theory (con't)
Top View

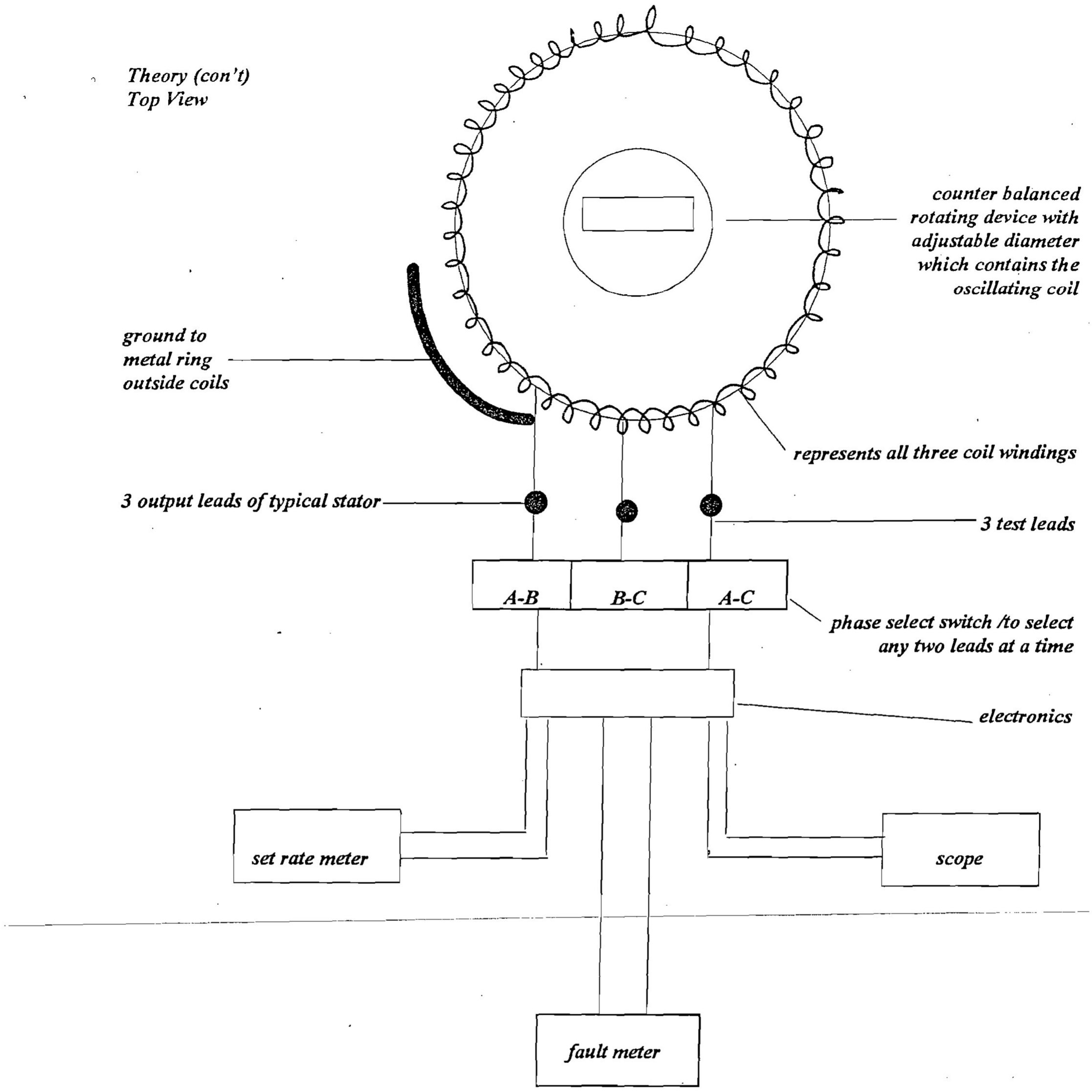

COMPONENTS OF SYSTEM

BLUE BOX #1:

Contains the stator support and rotating device. The rotating device can be adjusted to fit inside stators.

The stators will be positioned by a plastic sleeve inside of stator and held at correct height by supports around outside of laminations.

The operating motor is mounted in the bottom of the box and is operated by a run switch.

BLUE BOX #2:

Contains the electronics and meters. A scope connects to #2 blue box.

PLASTIC SLEEVES:

These are a two part device for centering the stators over the rotating element. We recommend reaching through the tube and knocking off the lid prior to installing the unit on the machine as there is no good means for its removal after it's installed. Once it is installed, the rotating element set and operating freely, then the cap can be reinserted for protection.

BLUE BOX #2 FACE

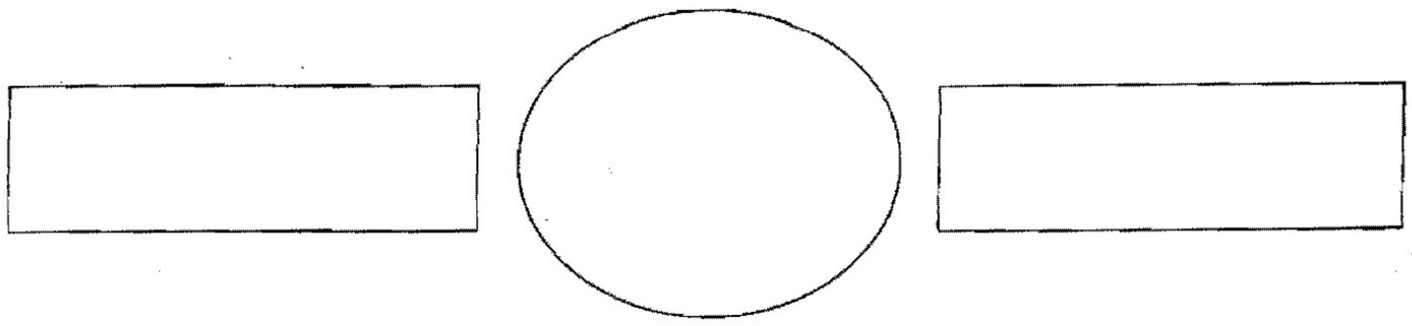

BLUE BOX #2 CONTENTS

Set-Rate Switch: *Selects which circuit will be displayed on left meter.*

Set-Rate Meter: *Is used to set the level and then to rate the stator.*

Set-Pot (Dial): *Set the level for a typical stator so that fault circuit will operate correctly.*

Fault Meter: *Indicates fault of some type in stator under test.*

Type Switch (Dial): *Six positions to set the circuit to operate with different stators.*

Balance & Centering Pot (Dial): *Sets the rate meter to mid position (with a good medium stator on the machine).*

Input Jacks are to connect to output of Box #1.
Scope Jacks connect to the scope.

TO CALIBRATE SET UP

This procedure is only necessary if plastic centering holder support plate is moved or if one is testing odd stators without plastic support.

to test stators, it is necessary to have them as close to centered as possible. So we start by centering the stator holding fixture. To hold the stator concentric with rotating element.

The centering is done with a good stator of medium output of the type to be tested.

When first centering a stator holding fixture, one can get an approximate center by rotating the rotating element by hand and observing clearance. The usual clearance while testing will be to have the rotating devise about 1/8" from stator laminations. The final centering is done with rotating devise being driven by the motor and observing scope pattern. Place the set knob at about 5 for this setting procedure. Hook up test leads as shown in electric hook up figure (page 5).

Scope picture of properly centered stator





Scope picture of stator not centered

By shifting holding fixture the good pattern can be obtained. When good picture is obtained the holding fixture is tightened and is ready to use.

With the mechanical set up complete, it is time to set up the electronic box. We have a good stator of medium output setting in the fixture and hooked up; so we are ready to proceed.

Place set-rate switch in set position and with tester rotating, turn set knob until left meter is at set mark on meter face. Place type switch to correct position for type of stator being tested. (We hope 6 positions will be enough on type knob). Place set-rate switch to rate position. With motor running, turn centering-balance pot knob so meter reads medium (we are using a medium stator for test).

ELECTRICAL HOOK UP

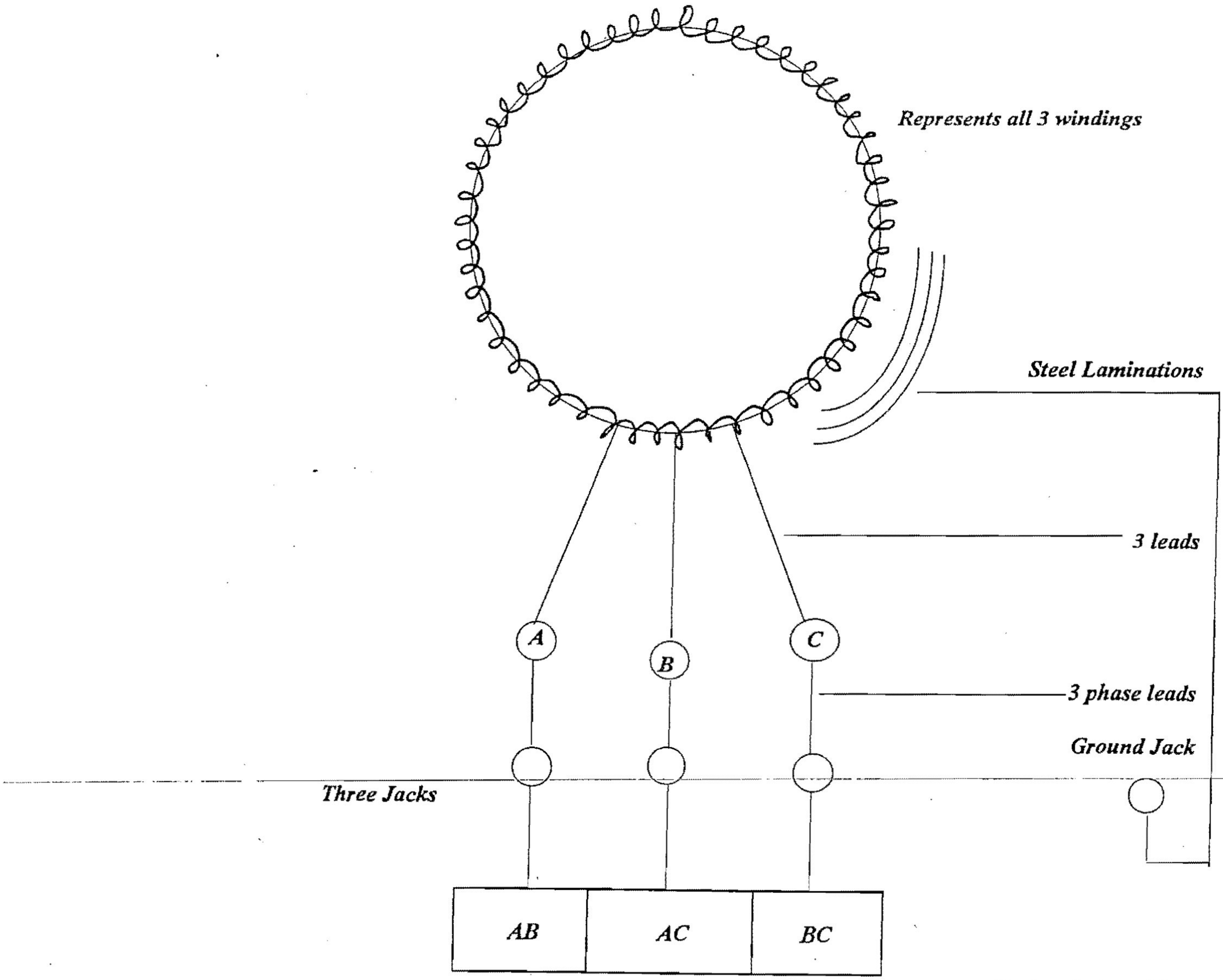

POWER AND MOUNTING

Plug both AC plugs into good quality 110 AC, 3-prong outlets. Do not operate at end of long drop cord, as this can have a temporary voltage drop each time the motor starts.

For safety purposes, it will be best to have the rotating element box below head level. Do not turn the rotating element on without the plastic cover in place.

This tester uses the ground green/yellow wire of the electrical plugs to tie the two chassis together and prevent noise in the stator signal between the chassis.

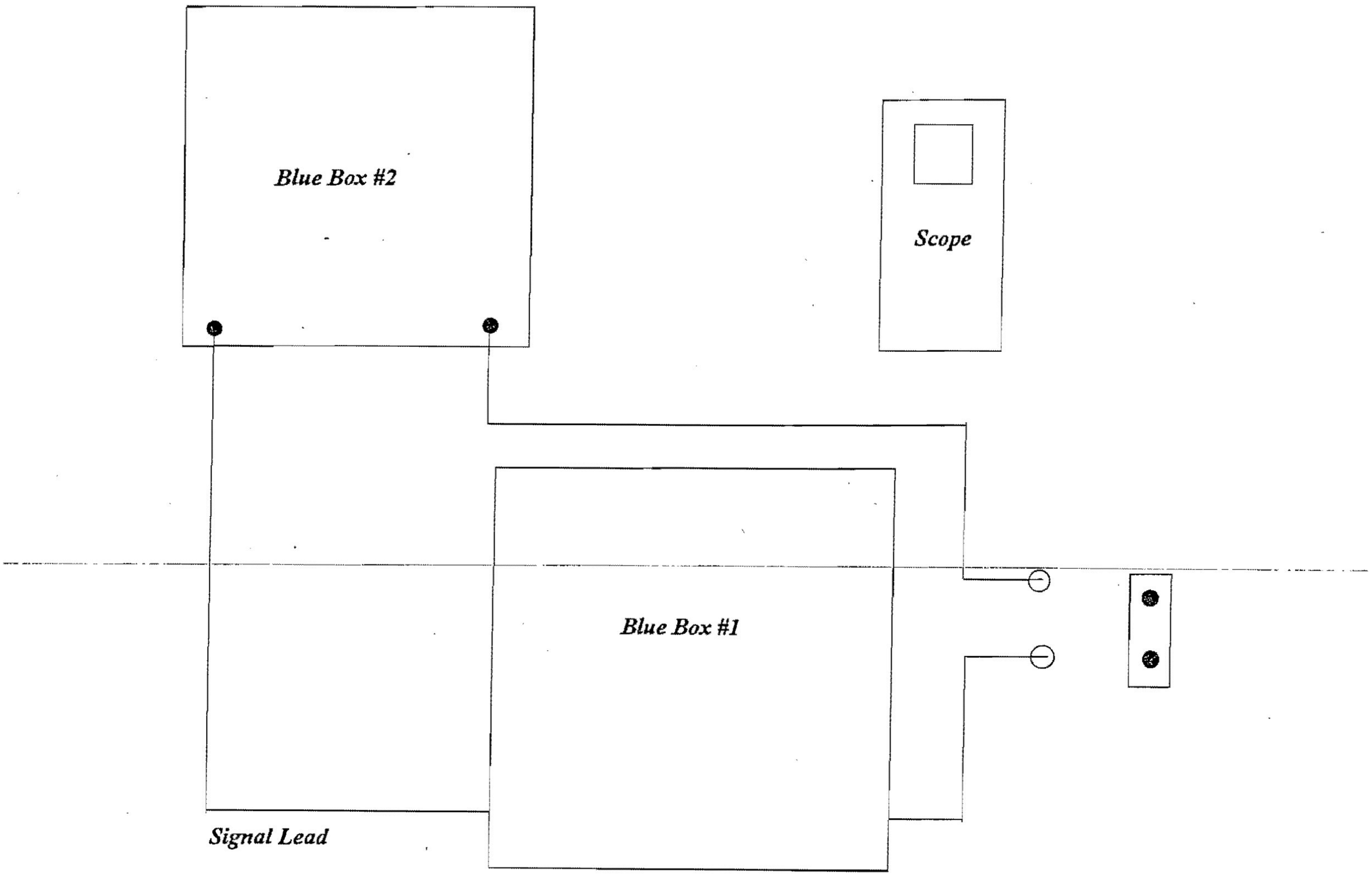

STATOR SUPPORT SYSTEM

Different plastic centering pieces will be furnished to hold 12 si, 27 si and HI Amp Ford. Others will be available.

Plastic centering clamps will be retained by 2 hold down clamps. After removing these 2 clamps one can change the plastic centering piece for different stators. Whenever different stators are tested it will be necessary to change the plastic piece, reset the width of the rotating device and reset the support slides.

The plastic piece will center the stator and the support slides will only hold the stator at the correct height.

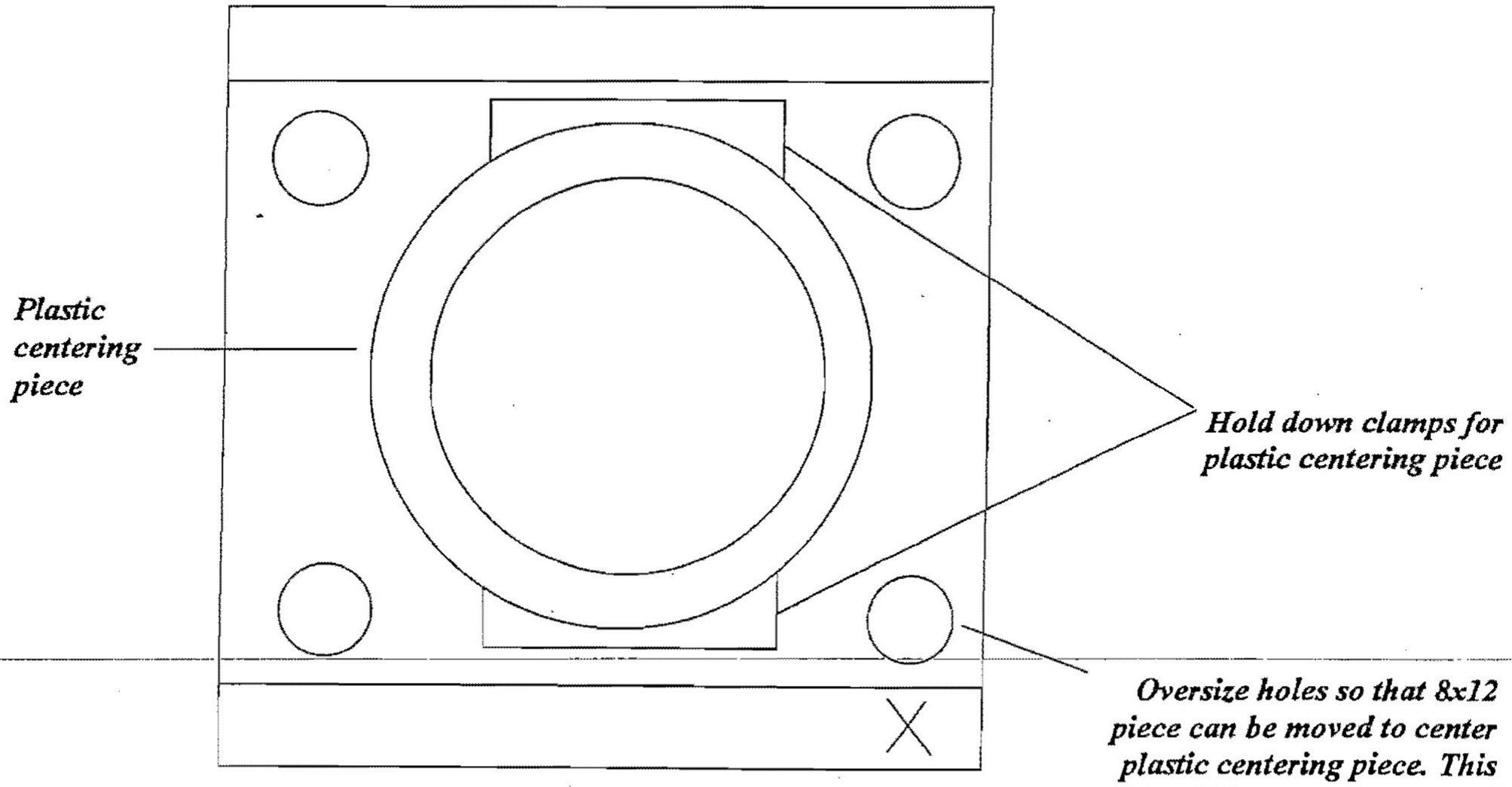

The support fixture has adjustable slides to be used to support stators at correct heignt and keep them from touching bottom plate, or if a plastic centering support is not available the stator can be supported and centered by this holding fixture. The slides of the stator support should hold the stator so that the rotating device and stator are about the same height.

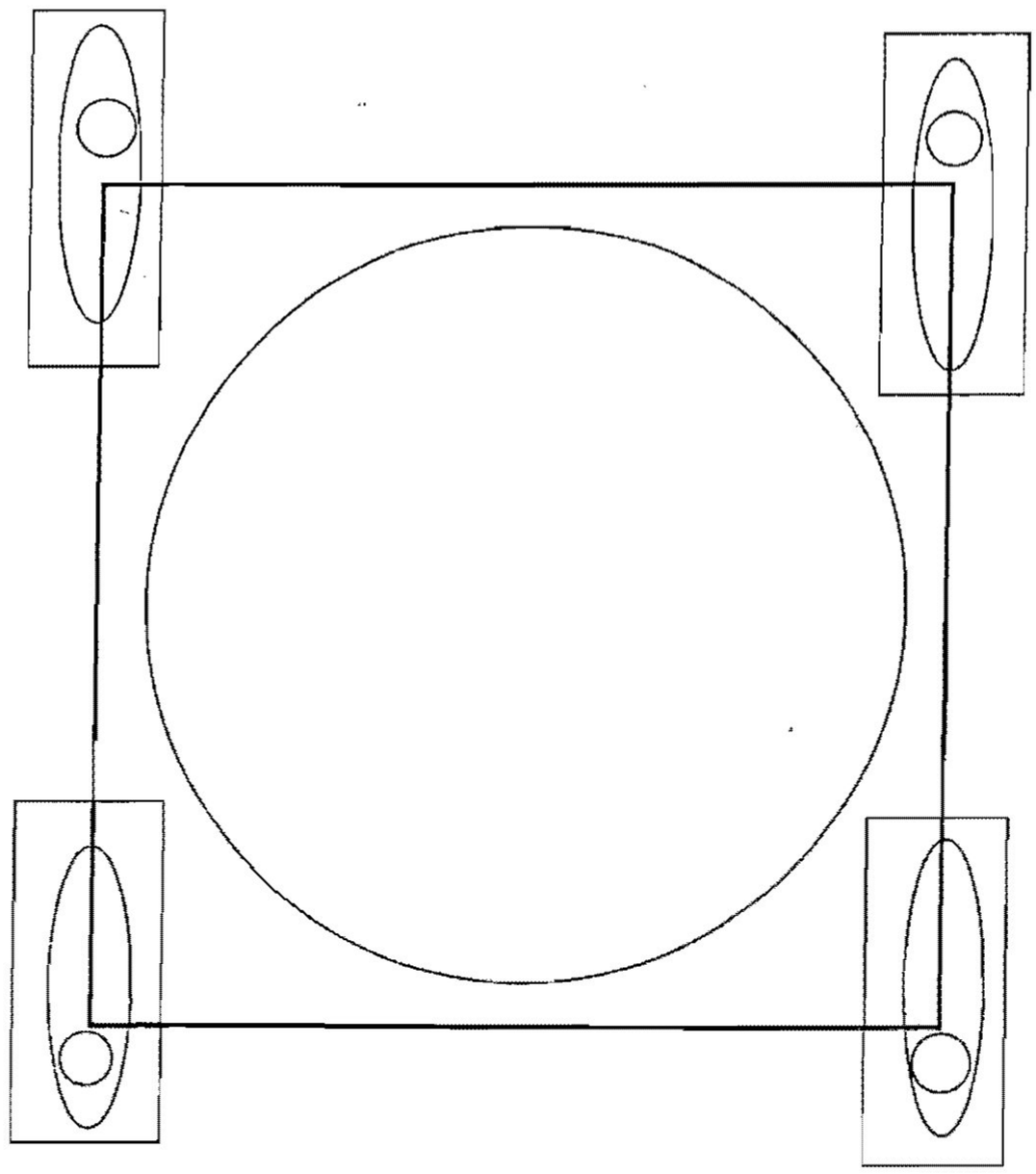

Adjustable slides to support the stator

The slides will have different steps in the ends so one can reposition the slides to give the stator the correct height.

Stator windings should not be allowed to contact middle 8x12 plate.

Setting the diameter of rotating device and locking same in place. The diameter of the rotating device is usually set to run with about 1/8 inch clearance. When the plastic centering holder is used to center the stator the rotating device can operate with very little inside clearance of the plastic sleeve and one will have about 1/8 inch operating clearance. But when testing odd stators for which one does not have a plastic center support it will be best to operate with 1/8 inch clearance. Because of the demand for testing all different size stators, we recommend setting the rotating device by establishing a size for each stator and recording distance(s) for future use. Always have the lock-down screws tight before operating.

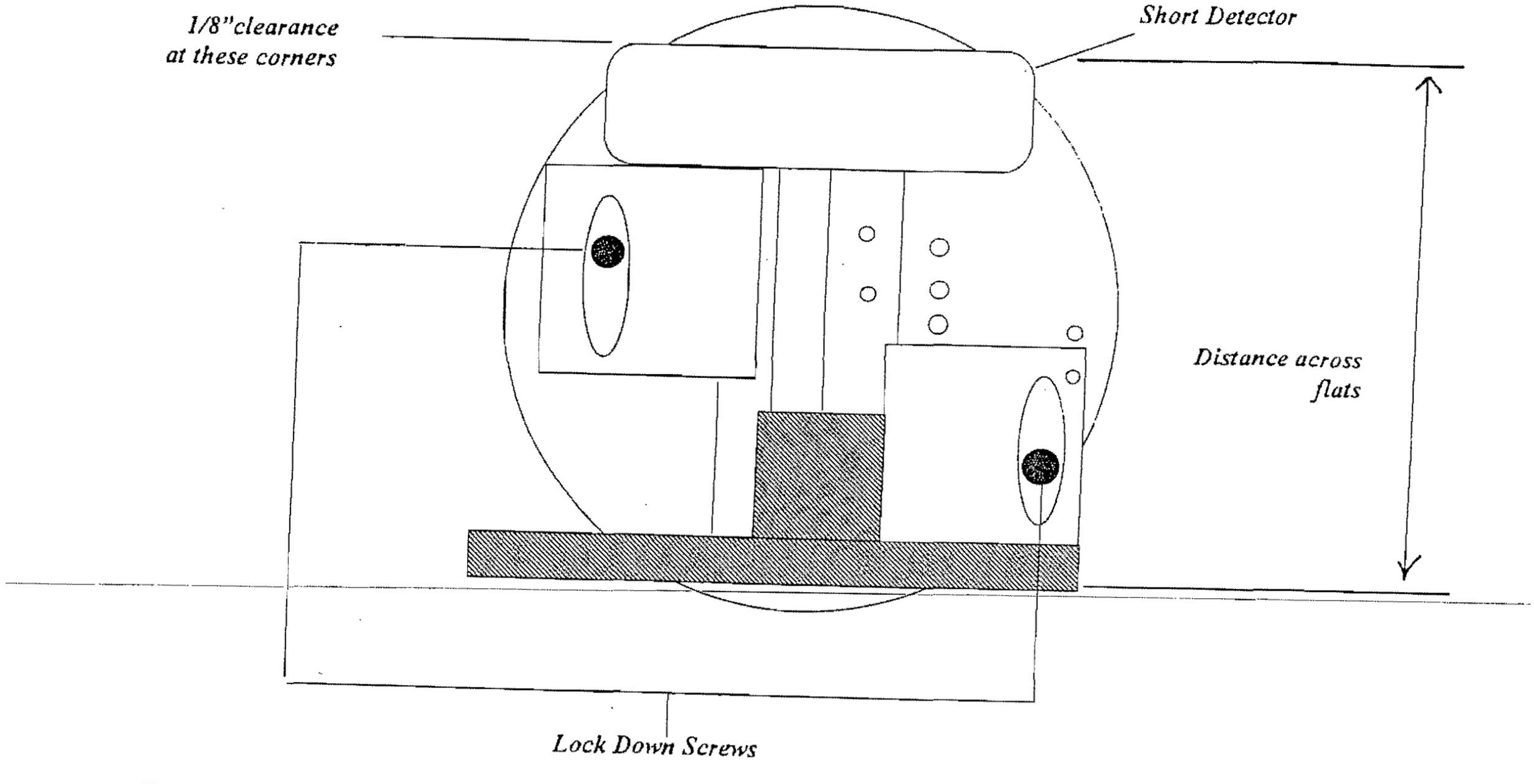

The following are the distances across flats to be used when plastic sleeves are used in the following stators:

10SI & 12SI	*Delco*	*3 1/2"*
27SI	*Delco*	*3 15/16"*
90A	*Ford*	*3 13/16"*

TEST

Now ready to test stators of this type.

Place untested stator on machine making sure it is well seated over holding fixture. Hook up leads as shown in electrical hookup figure.

Have motor running and observe the scope, fault meter and rate (left) meter. Also move phase select switch to observe (test) each combination of coils (there can be a short which will appear on only two coils).

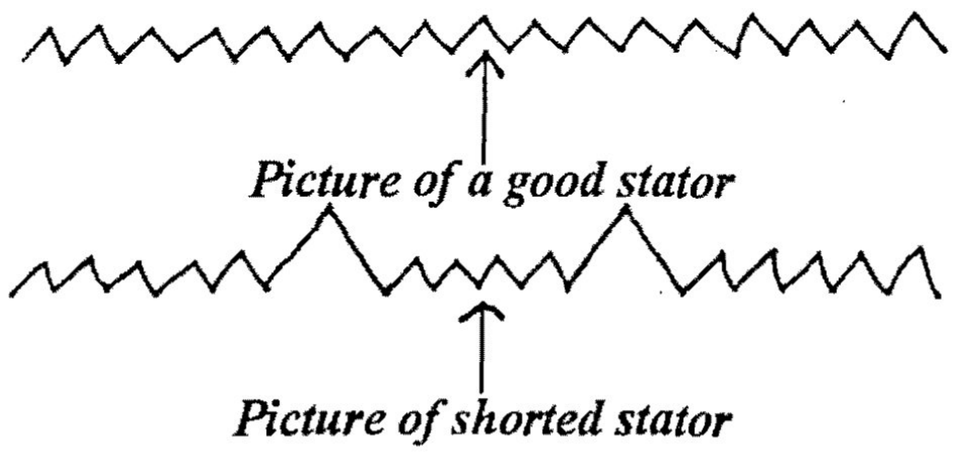

Picture of a good stator

Picture of shorted stator

ood tator: *Also fault meter reads near zero, and rate (left) meter will show approximate output of stator (Low, Med or High).*

ad tator: *Fault meter will read 20 or more. Left meter will be irrelevant as stator has short or ground and will need to be repaired or replaced.*

LOCATING SHORTS

To locate the shorted spot in a stator after a stator has been found faulty when testing:

Rotate the rotating element by hand, have the rate switch in set position. Watch the set meter and when rotating element is close to the bad spot the meter will go far to the right side. It may be necessary to perform this test first using one phase button and then another phase button as the fault can be in a leg not checked on the first try.

On a shorted stator, one can locate the short by rotating the rotating device slowly by hand (the top will have to be off of the plastic piece so the center piece can be rotated by hand). The short will cause the left meter to read high when a corner of the rotating device is near the short.

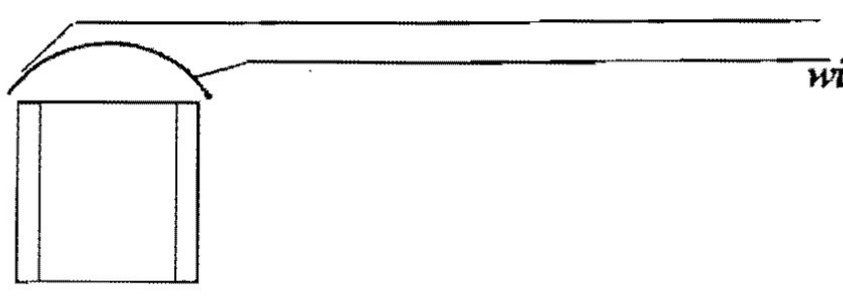

high reading and bad spot will be at either of the places depending on lead hook-up.

Reference 3G Ford stator or other stators wound with parallel wires. The leads to the individual windings will need to be separated so that each wire can be analyzed individually.

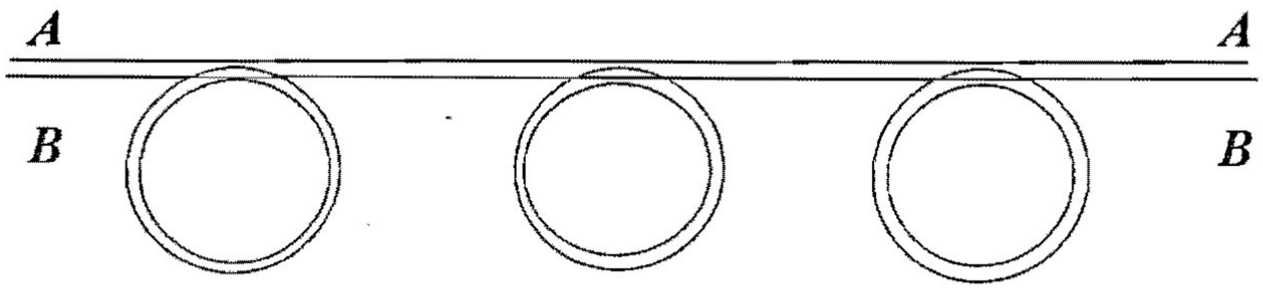

A to A will need to be tested separately. B to B will need to be tested separately as well.

PRACTICE USE OF MACHINE

With the analyzer set up for a particular type of stator, a good stator of that type can be shorted in various ways to show the operator how these shorts appear on the scope and meters. To accomplish this we use a single sided razor blade. There may be shorts within one loop of a single winding or shorts from one winding to another and /or grounds to laminations of steel frame.

Examples:

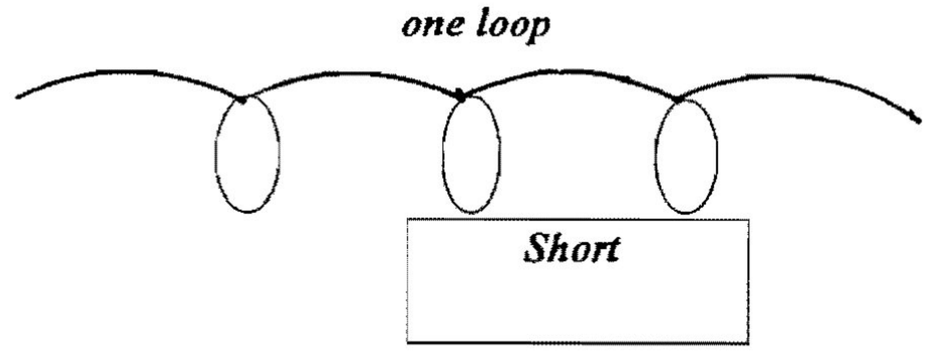

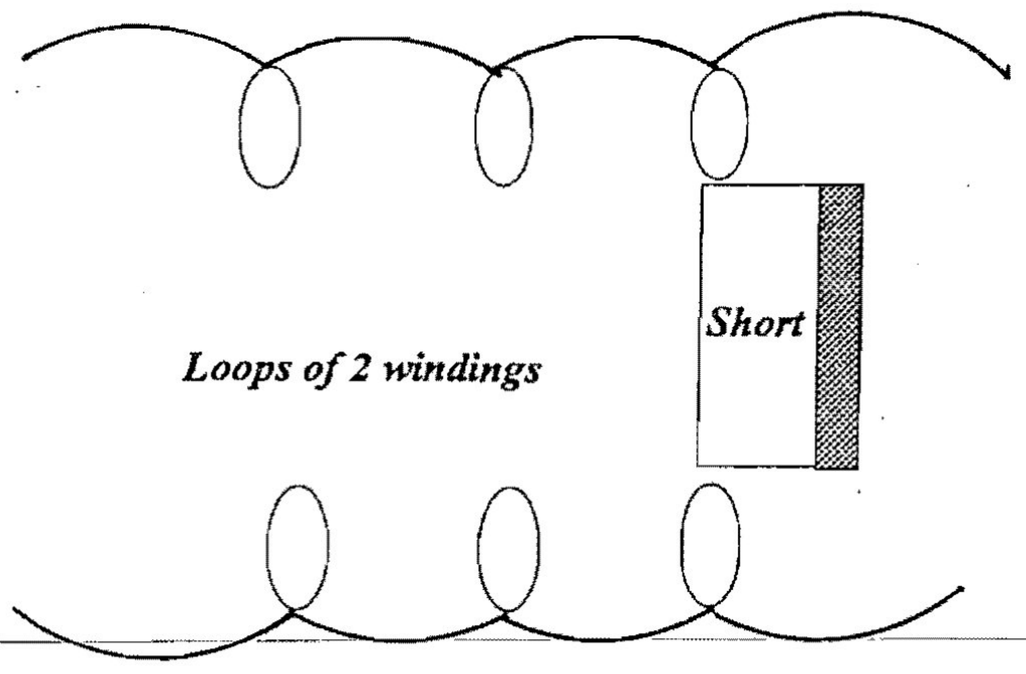

LATE NOTES

To rate a stator for medium, we use the old fashioned method of flowing current through the windings, using a current source separate from the tester. A medium stator is best so that medium position may be set and system will work on each side of medium.

Our method with old Delco or Integral Delco stator:

Amp flow:

45 amp	***=***	***low***
55 amp	***=***	***medium***
65 amp	***=***	***high***

Preliminary knob settings for different types and brands of stators can be collected as different types are tested.

Table (preliminary)

Set Knob	***Type Knob***	***Centering Knob***
Delco		
Delco (late)		
Ford		
Chrysler		

BASIC OSCILLOSCOPE SETTING

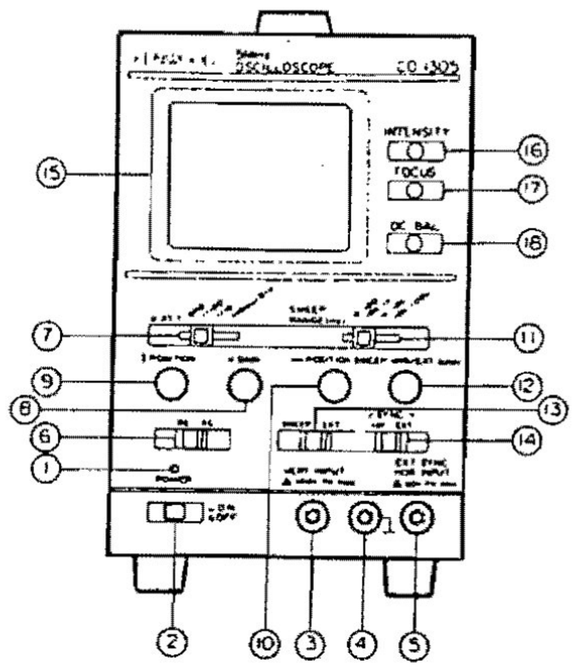

Electrical Set Up Procedure

Oscilloscope start up settings: Power Switch on
Verticle Input on 10
Sweep Frequency Hz on 10-100, Verticle Adjustment straight up, Horizontal Adjustment straight up, Verticle Gain at 11:00 o'clock, Sweep Variation at 1:00 o'clock and AC-DC switch n AC. Switch on the back in the Normal Position (toward outside of case).

Brushes are stock Motorola 3-2 with electrical tangs bent down.

The slip rings are regular Motorola slip rings. They are held on with two part epoxy. The epoxy should be non-conductive, so as not to effect the circuit. After the slip rings are installed and the epoxy hardens, they should be turned in a lathe to run concentric with the 1/2 hole in the center of the device.

TO TEST STATORS LESS THAN 3"

For the smallest diameter stator (below 3") it will be necessary to remove the balance slide and add a weight on a 1/4" screw. To remove the balance slide, remove the lock down screws and balance beam. Then install weight on 1/4" screw into 1/4" NC thread. 1/4" screw has flat on side to give clearance for sliding bar. The weight and mount screw weigh 114 grams.

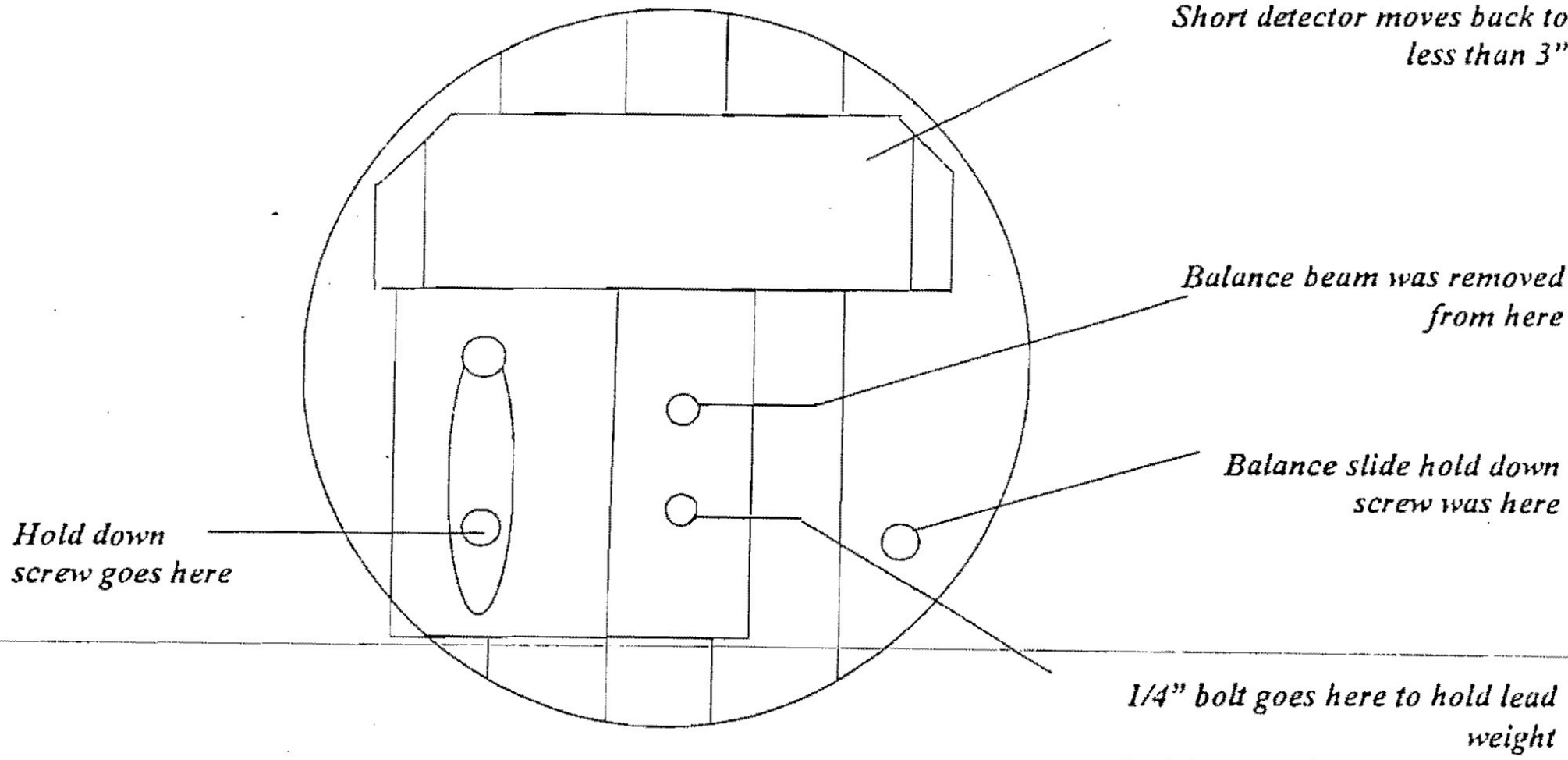

STATOR ANALYZER CHECK CALIBRATION

1. Rate -- set switch on "SET"

2. Gain pot on "MAX" (10)

3. 10 MV rms signal from signal generator (signal is 7000 Hz sine wave) or signal from stator on machine (machine not running but rotating device turned to obtain 10 MV signal). The left meter will read about at #3.

4. Then make and break input to red jack. The fault meter will read about 20 (with switch below fault meter on normal) and scope will have a 1 1/2 volt DC peak wave such as:

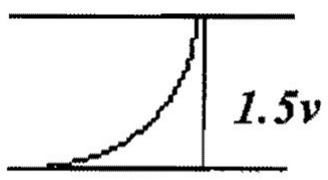

5. With rate-set switch on Rate with this signal, type switch on 2, and balance on 5 the rate will read Med (needle about straight up) and moving balance knob will move meter to each end or with balance on 5 moving type switch will move needle. Type 1 position will read about "4" and Type 6 position will read about "D".

VENSEL
ENTERPRISES

RICHARD & BARBARA
VENSEL

(815) 459-0355
(800) 662-6099
Website: www.reman.com/vensel
E-mail: www.vensel7@aol.com

3710 RIVERSIDE DRIVE
CRYSTAL LAKE, ILLINOIS
60014 USA
FAX (815) 459-0442

AUTO ELECTRIC
EQUIPMENT SUPPLIER

TROUBLE SHOOTING

The stator signal coming from the Rotating Element Box goes to the Red ;and Black Jacks of the Amplifier Box, next to a 1K gain pot, then through the 1K resistor (R1) to amplifier U1, where it picks up a gain of about 30, then through capacitor C1 and resistor R4 to amplifier U2 with variable gain pot (P4). Pot P4 is set to give a gain from Input Jacks to TP4 about 250. Have Input Gain Pot at 10 (max) when checking gain.

When trouble shooting, the oscillator section should be tested first. If the oscillator section is O.K., its output can be used to check the amplifier section. (See Oscillator Test pages).

On Amplifier Board check power voltage by reading voltage at capacitors.

C11 and C9	*+13 +/- 1 at + end of capacitor*
C13 and C12	*-13 +/- 1 at - end of capacitor*
C10	*+13 +/- 1 at + end of capacitor*

The output from a stator mounted on the holding fixture can be used as a signal.

At maximum output with a Delco Stator on the tester, with the revolving element at the correct distance, set pot at max (10) and the output maximized by rotating element by hand to get the best output. This will be about .03 RMS AC volts into the amplifier box. Have switch on set. The scope used on the machine can be used to observe the signal. The signal is about 7000 HZ. With scope settings: Vertical Input X1, Vertical Gain at mid-point, Sweep Variation at mid-point, Sweep Frequency 10K.

About 5 sine waves will be observed about 1 1/2 divisions high (1/2 inch). Output of U1, pin 6. point A, will be about .7 RMS AC volts (scope same as above but Vertical Input at X10). Scope will be about 4 divisions (1 inch). Set pot on front at 10 for these checks. Output of U2 pin 6 or TP4 will be about 8. RMS AC volts (scope same as above but Vertical Input at X 100). Scope will be about 4 divisions (1 inch). This is a gain of about $\frac{8.00}{.03}$ *V = 260.*

TROUBLE SHOOTING (CON'T)

The system originally had a gain of about 250 to 260. From U2, pin 6 the signal goes to a rectifier filter to remove the 7000 HZ and leave the modulation part of the signal. This modulation signal goes to the scope jacks via a.1 uf capacitor.

The signal also goes through .22 uf capacitor to the fault amplifier. To check the fault circuit, a stator with a fault should be placed on the machine (such as a screw through a loop to cause a fault) and the machine operated.

With the machine running and a faulty stator on the fixture, a signal will be present at point where C3, R13 and B8 join on point D. This signal will be a spike or square wave about 2 divisions (1/2 inch) high. To read this with scope have Vertical Input X 100, Vertical Gain at mid-point, Sweep Variation at mid-point, Sweep frequency at 10/100 and front Set Pot is turned to 4 or 5 (when Delco Stator is used). This signal goes to U3, Fault Amplifier, with a gain of about 5 so that output on pin 6, point E of U3, is 5X the signal, at point D checkd in above paragraph. Use same scope settings.

This signal is filtered to give a fault meter reading.

A stator with a one turn short in one loop will give a fault reading of about 80.

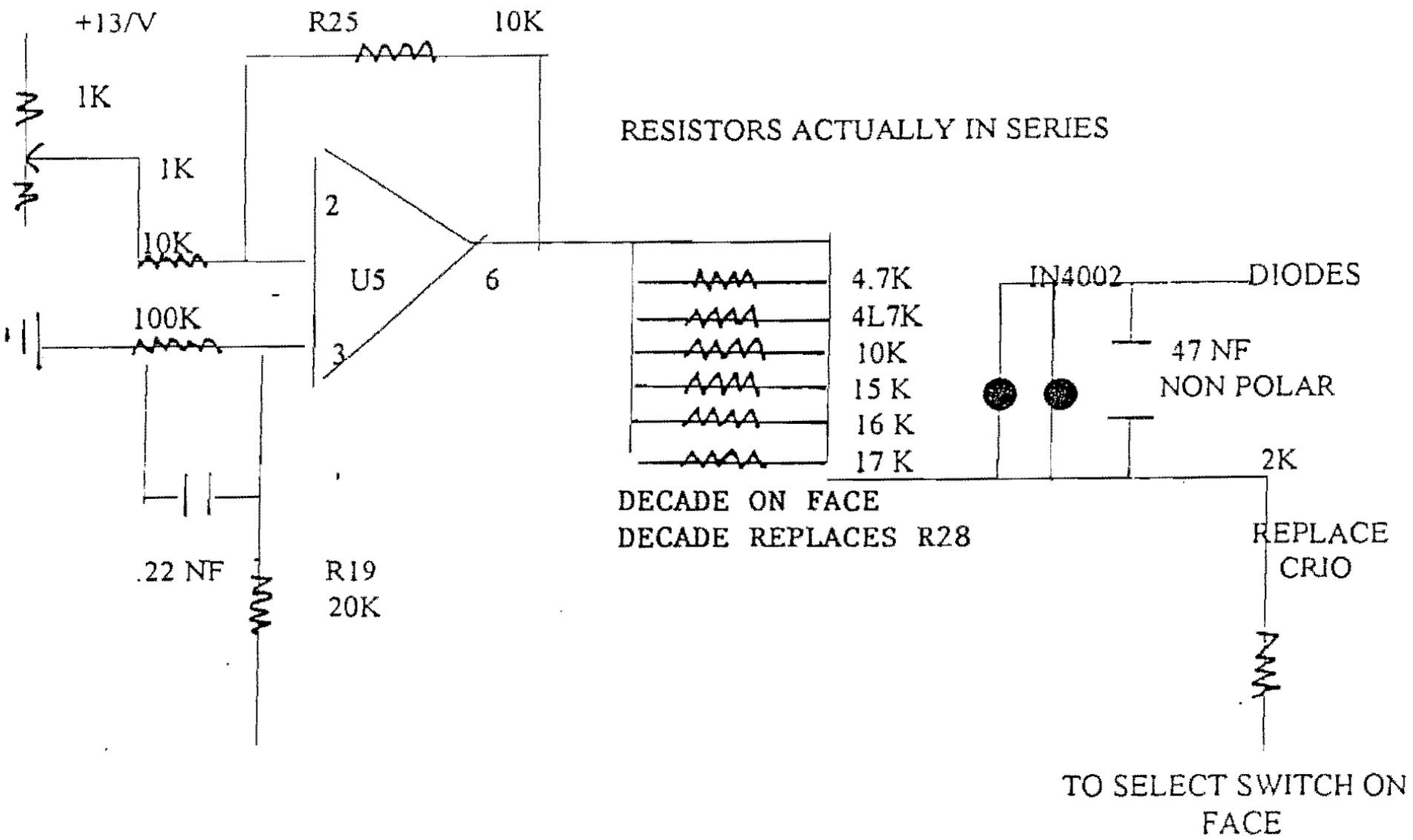

Rate Circuit Trouble Shooting

The signal from the U2 amplifier is rectified and filtered by D1, *R10, C2 and then fed to R19 to U5 (Pin 3) rate circuit amplifier. The U5 amplifier is fed a centering signal to pin 2 from the centering pot on face of the machine. The gain of U5 is 1 (unity). This output goes to the decade switch where it is attenuated. Then to a diode limiting circuit and a 47 uf cap. then to the rate-set switch.*

Trouble with jacks on front of machines, covers the following machine series:

OT-0915	*OT0917*	*OT-0914*	*OT-9905*
OT-0916	*OT-0920*	*OT-0921*	*OT-0924*

We used good jacks but they separate after use and the tighter the outer knob is tightened the more likely of an open.

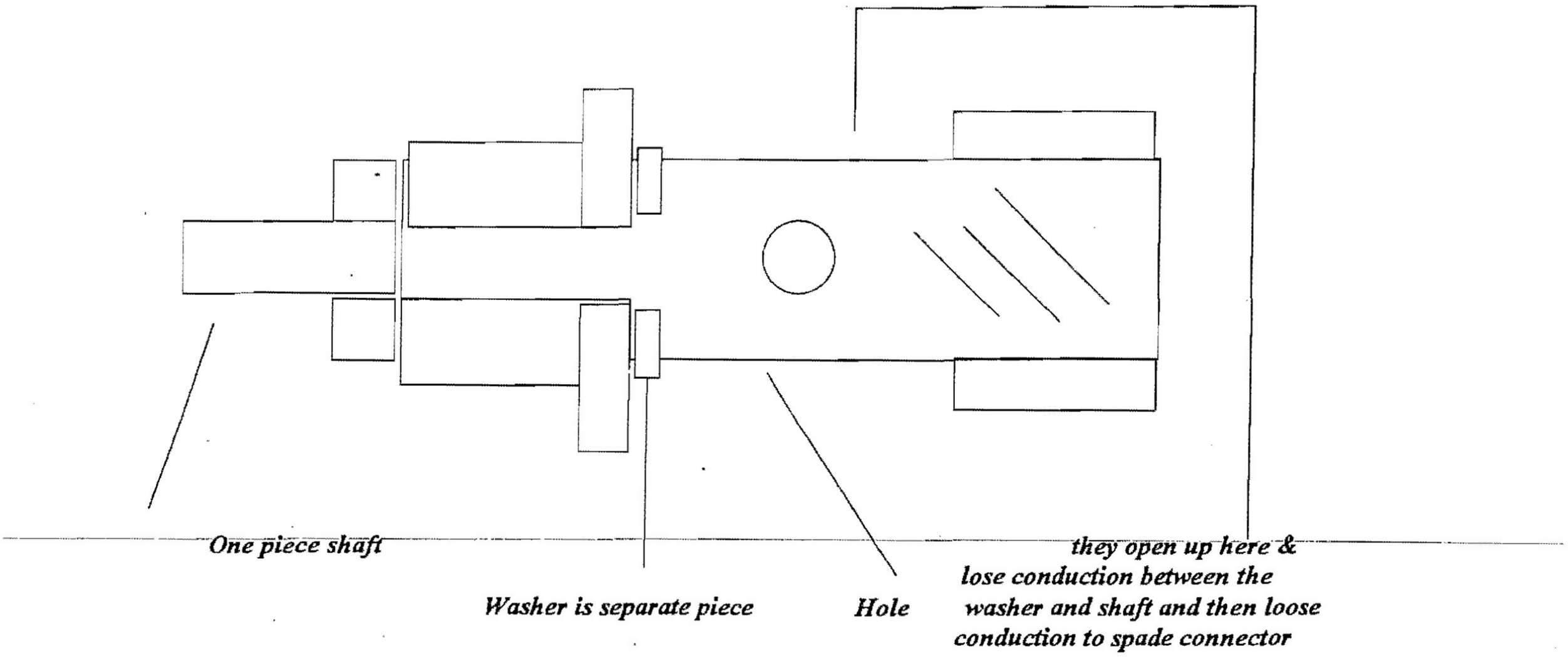

For a quick check or quick fix one can insert one leg of the spade connector into the hole & then tighten knob to get good conduction..

Future machines will have other type jacks or a pin connector to go in the hole of the jacks.

STATOR QUALIFIER
Part No. 200917

Serial No. _____ **Date:** _____

Equipment

- ☐ DMM Fluke 8012A or NLS LM3.5A
- ☐ Scope: as supplied with tester
- ☐ Stator standard: good, medium output 12SI stator, Delta wound

Oscillator Board Voltage Tests

- ☐ LM311, 31≠ 2 volts, measured at + of C3 or C4, with - of C3 as ground
- ☐ Darlington 2N6385, 42 ≠ 2 volts, measured at + of C2 with - as ground

Amplifier Board Voltage Tests

Use - of C9 as ground

- ☐ + side of C9 = +13 ≠ 2 VDC
- ☐ - side of C12 = -13 ≠ 2 VDC
- ☐ + side of C10 = +13 ≠ 2 VDC
- ☐ - side of C13 = -13 ≠ 2 VDC
- ☐ + side of C11 = +13 ≠ 2 VDC

Oscillator Board Adjustments (symmetry)

- ☐ Set pot P1 while observing scope picture from ground to TP1 as shown in Figure 7. Should be 40 volt pp with 50/50 on-off cycle. Scope picture will be such as

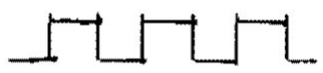

- ☐ Set pot P2 (tuning) by observing output from stator mounted in holding fixture. Picture will be 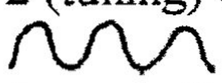 . Rotate rotating device to get highest reading and turn pot to then obtain highest reading. Output is about 45 MV RMS or 140 MV pp on scope.

Amplifier Board Gain Adjustment

- ☐ With 20 MV RMS, 7K Hz signal into the input jacks, set control max (10), set switch on set, output measured at Tp4 shown on Figure 8 board drawing should be 5.0 to 5.2V RMS or a gain of 250 to 260.

TEST RATE CIRCUIT

Rotating device does not need to be rotating but must be positioned to give good output signal. Set-Rate switch at set, then adjust set control knob to get left meter to read "SET". Then switch Set-Rate switch to "RATE". Set type at 4, adjust centering knob to get left meter to read "B".

Then	*1*	=	*5 extreme right*
	2	=	*4*
	3	=	*centered at medium*
	4	=	*B (starting point)*
	5	=	*C*
	6	=	*D*

On type 3 the centering knob should be able to drive the meter to either end.

Divide by 2 Switch

With machine running and a short between 2 adjacent coils the divide by 2 switch should divide the fault reading by about 2.

Scope Output

Scope picture for good stator with set control knob to give reading of "SET" will be

.4V to .5V pp

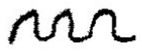

10MS

Fault Meter Check

With stator mounted in holding fixture and rotating device rotating and all leads hooked up and Divide by 2 switch on normal. Before making short in stator fault will read 10 or less then after making a between coil short the fault reading will be about 60 or 70 (it may be necessary to try different positions of phase switch to get highest fault reading). Also the scope picture will show some high spikes.

Phase Check of Phase Select Switch

If we assign the three red jacks on the holding fixture panel phase letters such as:

A *B* *C*



then, with all leads hooked up, the 3 position switch will probably read phase A-B switch up, B-C switch middle, B-C switch down. We do this by using 2 leads at a time to show which red jacks are being hooked to the blue box when 3 position switch is moved.

Rotating Device Test

We check the rotating device to see that it can be adjusted easily from 4 1/4 to 2 3/4 inches across flats as shown in operating manual.

Cord Ground Check

We check both AC cords and oscillator signal cord to see that their green lead soes to chassis ground.

Final Run of Whole Assembly

With good test stator on fixture and all leads connected and permanent ground lead from lower right sliding arm to black jack. Run tester. Set-Rate switch on "SET", set control on about 4" to get meter to set point, fault probably less than 10, scope less than IV pp wiggly line, Divide by 2 on "NORMAL". Try phase select switch to show 3 phases are being tested. Make a short between phases and observe fault of 60 or 70 and big spike on scope, the phase select switch will show 3 different pictures. During this test (assuming ground button is touching stator laminations) if a short is made between a coil winding and the laminations the fault meter will go to 60 or 70 and scope will show spikes.

Rate check, switch Set-Rate switch on "RATE", all else remains the same. Type on 4 then centering knob should be able to be moved and thereby move left meter both sides of Medium point of meter.

Set Up Procedures-Stator Tester

1. Select proper hat.
2. Set rotor to 1/64 from hat.
3. Mount test standard stator, make sure it is completely seated.
4. Put rate-set switch in set position.
5. Type switch in 4
6. Normal - 2 in normal
7. Turn on Rotor Box, Meter Panel and Oscilloscope. Allow to warm up for 3 minutes.
8. Connect the stator phase 1, (wire position same way every time).
9. Activate run switch.
10. Rotate 0-10 dial until left meter reads set, note position of switch. Check all 3 phases with Phase Selector Switch.
11. Move Rate-Set Switch to the rate position.
12. With the rotor still running, rotate the centering switch until the meter on the left reads set once more.
13. The machine is now ready for testing.

Special Notes:

A. The only switches or controls that will be moved will be the run switch and the phase selector switch.

B. There will probably be a difference in readings between the OEM standard and your rewound stator, due to the coil configuration, difference in wire size and the fact that the lamination stack has been burned out. The goal is to keep this difference to a minimum and to have a consistent scope pattern on all three phases.

VENSEL ENTERPRISES

RICHARD & BARBARA VENSEL

(815) 459·0355
(800) 662·6099

3710 RIVERSIDE DRIVE
CRYSTAL LAKE, ILLINOIS
60014 USA
FAX (815) 459·0442

AUTOMOTIVE & INDUSTRIAL EQUIPMENT