Voltage Regulator Tester Manual

VRC1000





Most Instruction Sheets also apply to VRC101A and B.

TRANSPO®

ELECTRONICS

A WAI Company

ISO/TS-16949/ISO14001 CERTIFIED

739927

OCTOBER 2006

Table of Contents

Regulator Type	Product Group	Beginning Page #
BOSCH	IB	1
C.A.V	CE	32
CHRYSLER	C	35
DAEWOO	DA	37
DELCO	D	38
DUCELLIER	ID	82
ELECTRODYNE	E	89
FEMSA	IF	93
FORD	F	96
HARLEY	H	109
HITACHI	IH	111
ISKRA	IK	152
LADA	IR	154
LEECE NEEVILLE	L	155
LUCAS	IL	166
MAGNETI-MARELLI	IX	172
MAGNETON-PAL	PAL	180
MANDO	IY	183
MITSUBISHI	IM	188
MOTOROLA	M5	251
NIEHOFF	N	303
NIKKO	IZ	313
NIPPONDENSO	IN	315
PARIS RHONE	IP	352
PRESTOLITE	P8	363
SEV MARCHAL	IS	367
SPECIALTY	SR	371
STAR II AND STAR III	ST-D	79
TRANSPO 911 SERIES	911	372
TRANSPO REPAIR CIRCUITS	TRI	374
VALEO/MOTOROLA	M	394

Voltage Regulator Tester
VRC1000



Features:

- Test A and B Type Circuit Alternator Regulators
- Test 12V, 24V, and 32V Alternator Regulators
- Test Field Circuit with 0.5A, 3.0A, or 5.0A Load
- Identify Active L-Terminal (Choke Drive)
- Identify Presence of Over-Voltage Function
- Identify Presence of Field Diode
- Warning Light Circuit to Simulate Vehicle Indicator Lamp
- Short Circuit Lamp to indicate Regulator Short Circuit Overload
- Stator Output Signal for Testing Delco CS-Series and Other Types with this Requirement
- Lead Set and Test Manual Provided
- Line Voltage Requirements:
  VRC1000A 120VAC / 60Hz
  VRC1000B 240VAC / 50Hz-60Hz

OPERATING INSTRUCTIONS FOR VRC1000

1. Set the field current switch to 0.5A for checking or setting the regulation voltage. Set the field current switch to 3A for burn-in.

2. Set the "FIELD" switch to "A" or "B" according to the tester information given on the tester instructions.

   "A" Circuit - The "A" circuit regulator design has one alternator field lead connected to battery (or trio) and the other end of the field is controlled or switched to ground by the regulator.

   "B" Circuit - The "B" circuit regulator design has one alternator field lead connected to ground and the other field is controlled or switched to the battery (or trio) by the regulator.

3. Connect test leads according to tester instructions for the regulator being tested and follow all information given by notes and additional tests when applicable.

4. Select the "Voltage Range" (12v, 24V, and 32V) for the regulator being tested and turn the power switch to the "ON" position.

5. If the short circuit light comes on, quickly turn the tester "OFF". The short circuit light indicates that battery positive is being shorted to battery negative. However, when testing some vibrator contact regulators such as Ford GRB-5440 or Delco 1119519, the short circuit light will come on which is alright if the field light blinks. However, do not test the vibrator contact regulators longer that two minutes. Should the tester fail due to overload, check the fuse. The Transpo VRC1000 is not to be used to check D.C. generator regulators. The tester is designed to be used to test alternator regulators only.

TEST RESULTS "GOOD REGULATOR"

The regulator is operating correctly if the field light blinks and the digital meter displays approximately the set point voltage given on the appropriate tester instructions. Sometimes it may be necessary to adjust the voltage setting on those regulators that are adjustable. See the tester instructions for the regulator being tested.

TEST RESULTS "BAD REGULATOR"

Full Field - The digital meter will indicate approximately 16.5V for a 12V regulator, 29.5V for a 24V regulator and 42V for a 32V regulator. The field light will not blink but will remain "ON". A regulator with this type of defect will not be able to control the output voltage of the alternator.

TRANSPO TESTER INSTRUCTIONS

for BOSCH type regulators

PART NO.	FLD	VOLT	SET POINT	PART NO.	FLD	VOLT	SET POINT
IB370HR	**A**	**12**	**14.3**				
IB371	**A**	**12**	**14.2**				
IB372	**A**	**12**	**14.7**				
IB373	**A**	**12**	**14.7**				

1. POWER OFF: Set "Voltage Range" and "FLD" switches to desired setting. Connect the voltage regulator as indicated in the diagram below.

2. POWER ON: Field lamp should blink and meter will indicate approximately the set point voltage indicated in the above table.

3. ADDITIONAL TEST:

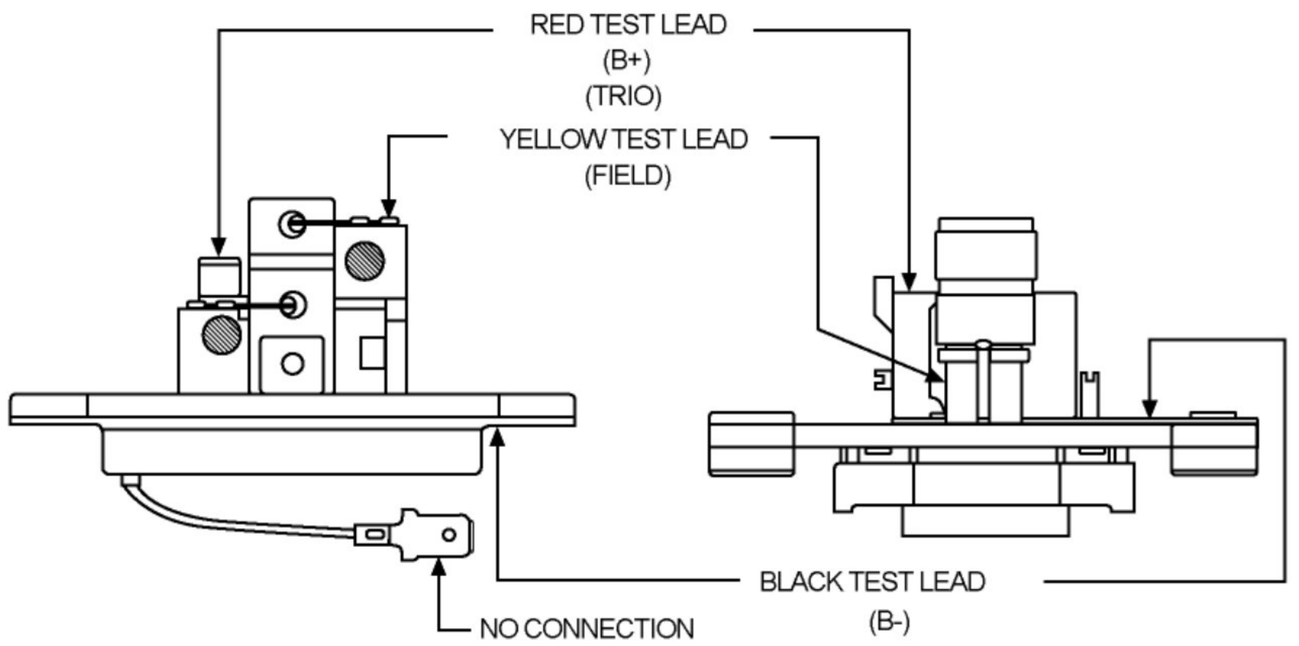

-IB370A
-IB371
-IB371X
-IB372
-IB373
-IB370Y

-IB370
-O.E. BOSCH

TRANSPO TESTER INSTRUCTIONS

for BOSCH type regulators

PART NO.	FLD	VOLT	SET POINT	PART NO.	FLD	VOLT	SET POINT
IB301	**B**	**12**	**14.2**				
IB302	**B**	**24**	**27.5**				
IB302A	**B**	**24**	**27.5**				

1. POWER OFF: Set "Voltage Range" and "FLD" switches to desired setting. Connect the voltage regulator as indicated in the diagram below.

2. POWER ON: Field lamp should blink and meter will indicate approximately the set point voltage indicated in the above table.

3. ADDITIONAL TEST:

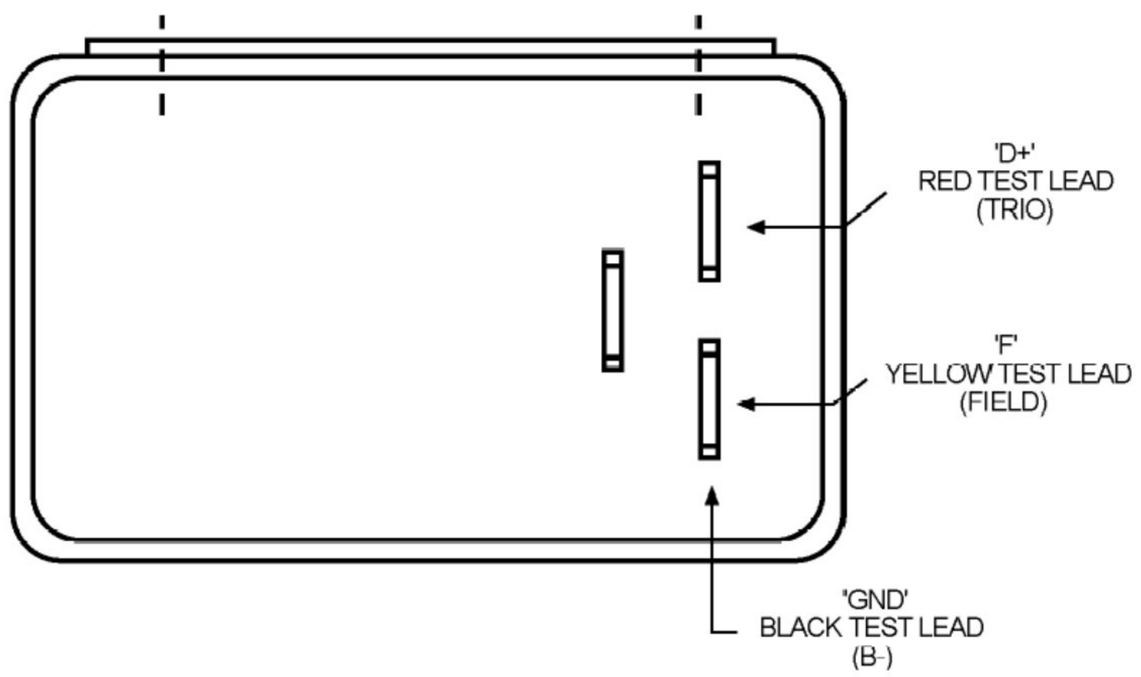

TRANSPO TESTER INSTRUCTIONS

for BOSCH type regulators

PART NO.	FLD	VOLT	SET POINT	PART NO.	FLD	VOLT	SET POINT
IB8315	**A**	**12**	**14.2**				

1. POWER OFF: Set "Voltage Range" and "FLD" switches to desired setting. Connect the voltage regulator as indicated in the diagram below.

2. POWER ON: Field lamp should blink and meter will indicate approximately the set point voltage indicated in the above table.

3. ADDITIONAL TEST:

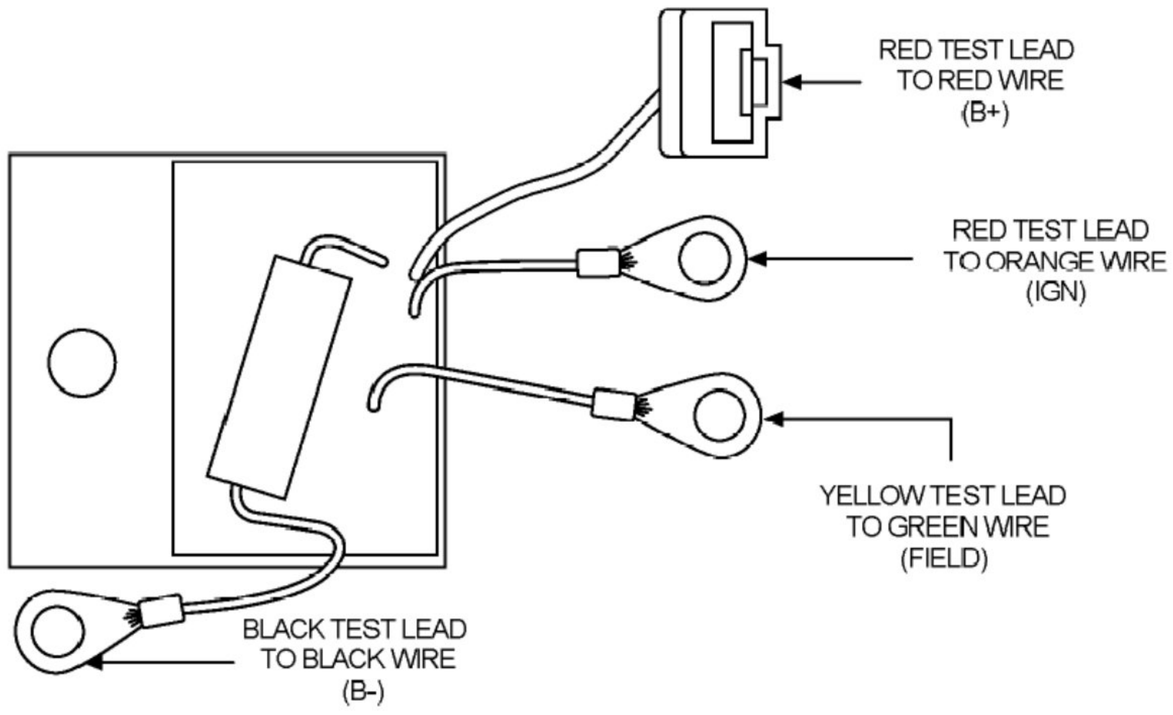

TRANSPO TESTER INSTRUCTIONS

for BOSCH type regulators

PART NO.	FLD	VOLT	SET POINT	PART NO.	FLD	VOLT	SET POINT
***IB392**	**A**	**12**	**14.4**				
***IB391**	**A**	**12**	**14.4**				

1. POWER OFF: Set "Voltage Range" and "FLD" switches to desired setting. Connect the voltage regulator as indicated in the diagram below.

2. POWER ON: Field lamp should blink and meter will indicate approximately the set point voltage indicated in the above table.

3. ADDITIONAL TEST: Remove white test lead from terminal marked "STA". Field lamp remain fully on and the meter will indicate approximately 12V. Reconnect the white test lead. Remove red test lead from the terminal marked "S", field lamp will turn off, the indicator light will turn on and the meter will indicate 12V. *__Using VRC1000__: To check for over Voltage, push the "Over Voltage" switch and the "Lamp Indicator" will turn on between 16.0V and 17.1V.

NOTE: Connect B- (black) test lead last, already having turned on the tester "ON" switch.
- 20 ampere 60 volt field transistor voltage saturation test @ 5 amps
  13.50 volts = 150 to 250 milli-volts
- Undervoltage Lamp Indication = 8.50 volts to 10.00 volts
- Overvoltage Lamp Indication = 16.00 volts to 17.10 volts
- Current Leakage = 2.0 milli-amps

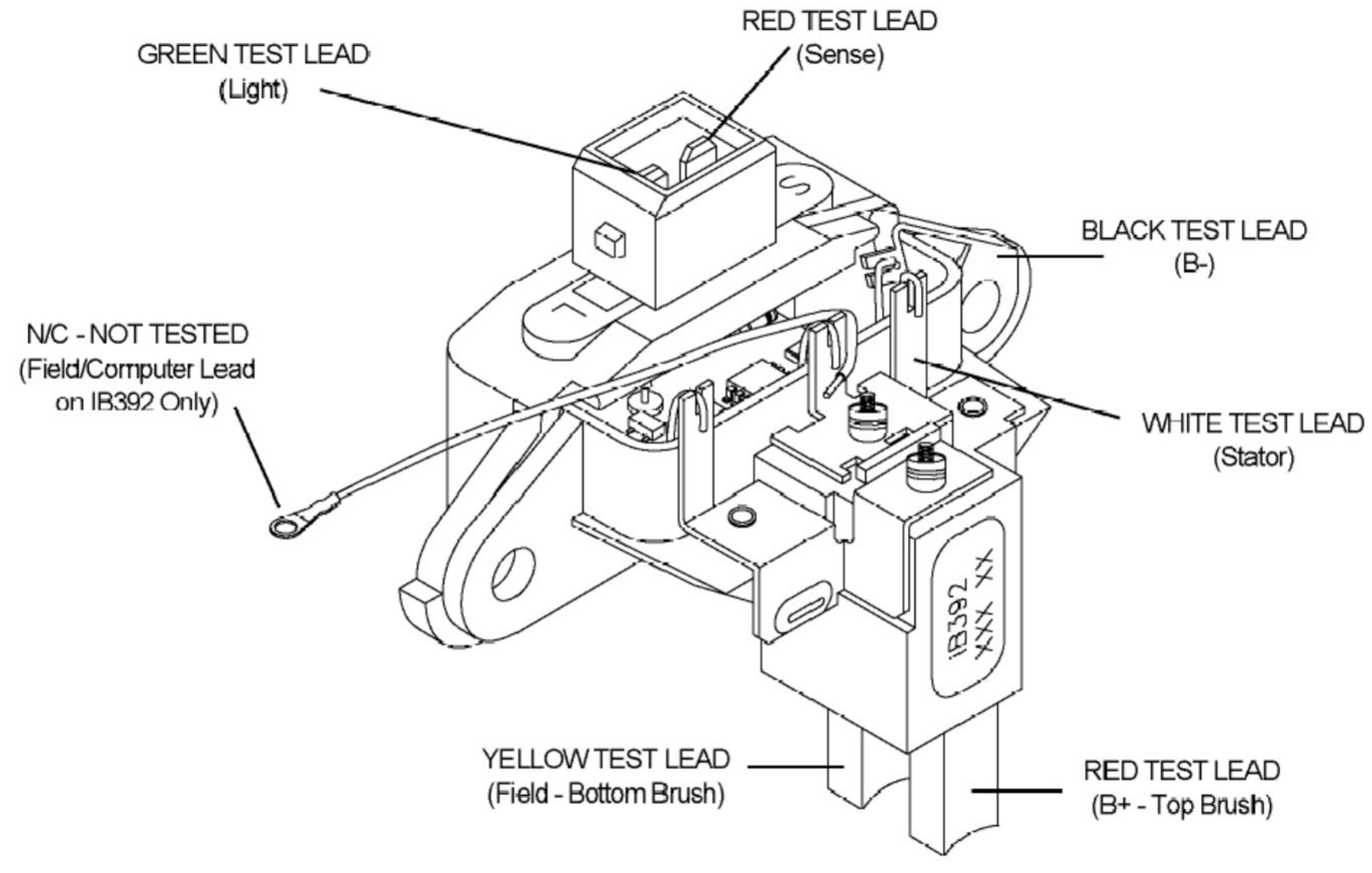

TRANSPO TESTER INSTRUCTIONS

for BOSCH type regulators

PART NO.	FLD	VOLT	SET POINT	PART NO.	FLD	VOLT	SET POINT
IB303	**B**	**12**	**14.4**				
IB303A	**B**	**12**	**14.4**				

1. POWER OFF: Set "Voltage Range" and "FLD" switches to desired setting. Connect the voltage regulator as indicated in the diagram below.

2. POWER ON: Field lamp should blink and meter will indicate approximately the set point voltage indicated in the above table.

3. ADDITIONAL TEST:

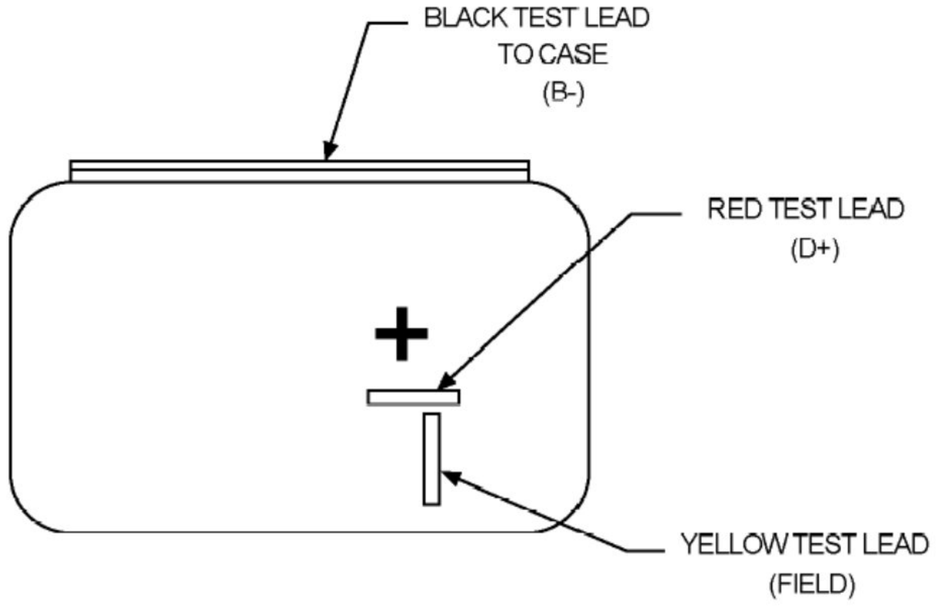

TRANSPO TESTER INSTRUCTIONS

for BOSCH type regulators

PART NO.	FLD	VOLT	SET POINT	PART NO.	FLD	VOLT	SET POINT
IB375	**A**	**12**	**14.4**	**IB379**	**A**	**24**	**28.1**
IB376	**A**	**24**	**27.5**	**IB374**	**A**	**24**	**27.5**
IB377	**A**	**12**	**14.4**				
IB378	**A**	**12**	**14.4**				

1. POWER OFF: Set "Voltage Range" and "FLD" switches to desired setting. Connect the voltage regulator as indicated in the diagram below.

2. POWER ON: Field lamp should blink and meter will indicate approximately the set point voltage indicated in the above table.

3. ADDITIONAL TEST:

TRANSPO TESTER INSTRUCTIONS

for BOSCH type regulators

PART NO.	FLD	VOLT	SET POINT	PART NO.	FLD	VOLT	SET POINT
IB380	**A**	**12**	**14.4**	**IB387**	**A**	**12**	**14.5**
IB383	**A**	**12**	**14.4**				
IB384	**A**	**12**	**14.4**				
IB385	**A**	**12**	**14.5**				

1. POWER OFF: Set "Voltage Range" and "FLD" switches to desired setting. Connect the voltage regulator as indicated in the diagram below.

2. POWER ON: Field lamp should blink and meter will indicate approximately the set point voltage indicated in the above table.

3. ADDITIONAL TEST:

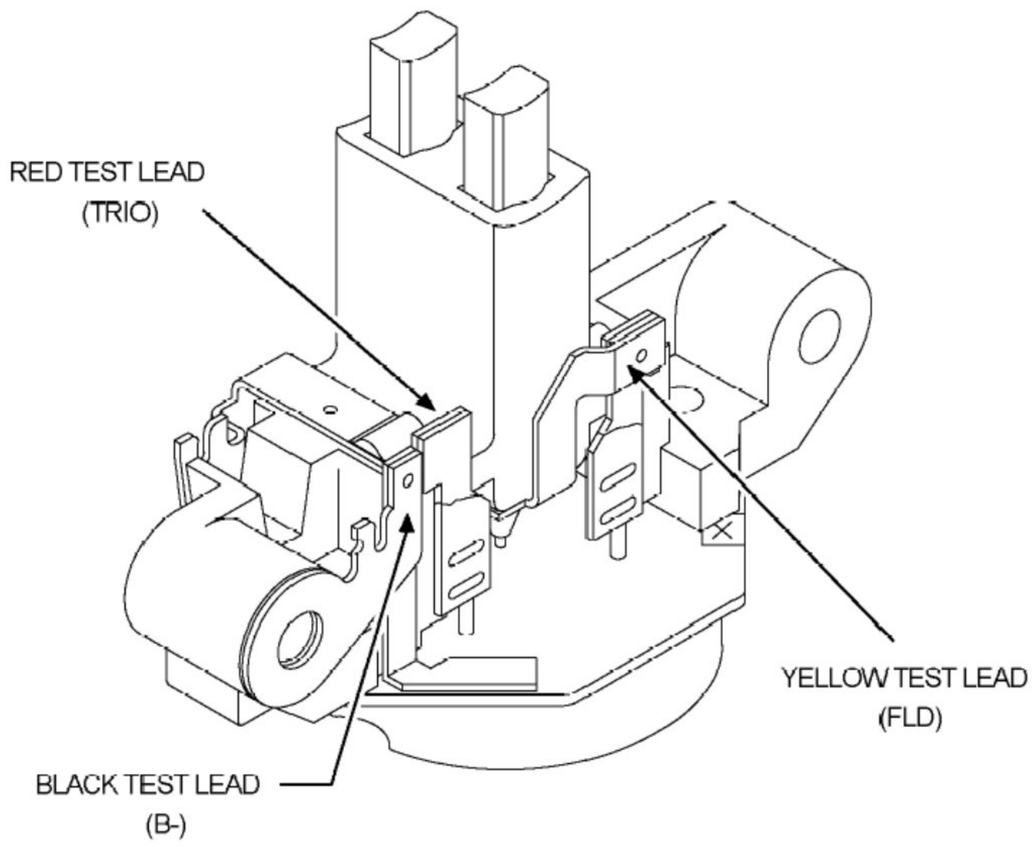

TRANSPO TESTER INSTRUCTIONS

for BOSCH type regulators

PART NO.	FLD	VOLT	SET POINT	PART NO.	FLD	VOLT	SET POINT
IB033A	**B**	**24**	**28.3**				

1. POWER OFF: Set "Voltage Range" and "FLD" switches to desired setting. Connect the voltage regulator as indicated in the diagram below.

2. POWER ON: Field lamp should blink and meter will indicate approximately the set point voltage indicated in the above table.

3. ADDITIONAL TEST:

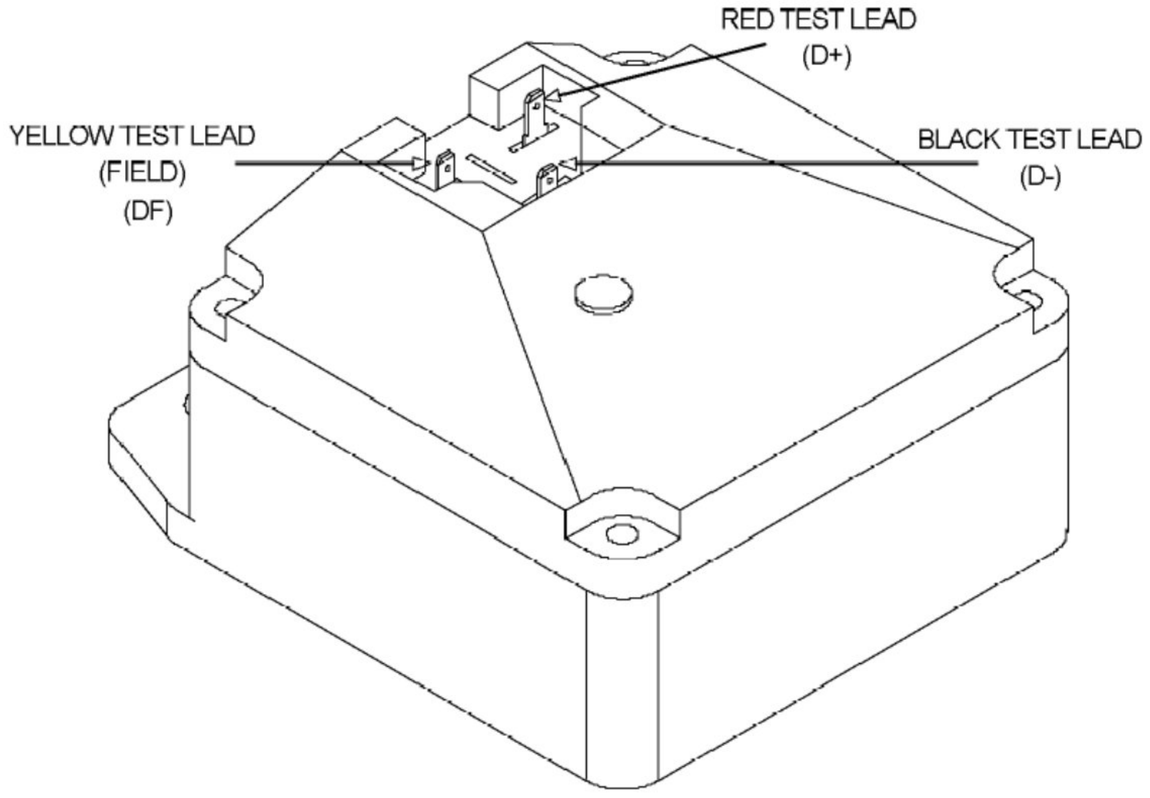

TRANSPO TESTER INSTRUCTIONS

for BOSCH type regulators

PART NO.	FLD	VOLT	SET POINT	PART NO.	FLD	VOLT	SET POINT
IB305	**B**	**12**	**14.8**				
IB306	**B**	**12**	**14.8**				

1. POWER OFF: Set "Voltage Range" and "FLD" switches to desired setting. Connect the voltage regulator as indicated in the diagram below.

2. POWER ON: Field lamp should blink and meter will indicate approximately the set point voltage indicated in the above table.

3. ADDITIONAL TEST:

NOTE: IB306 Superseded by IB305.

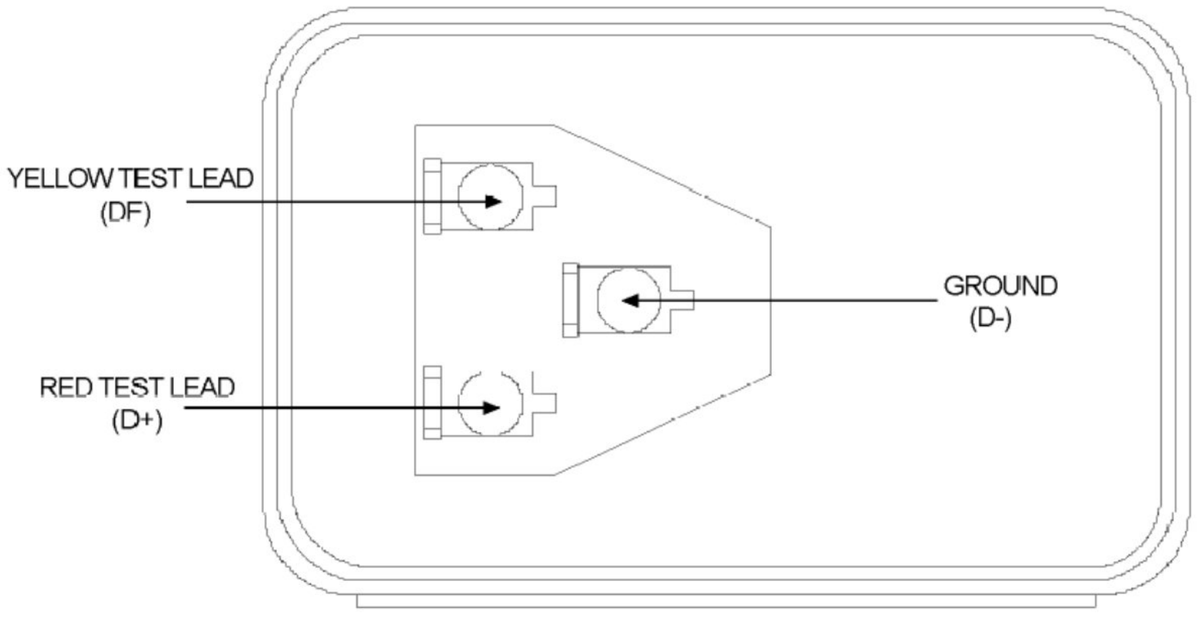

TRANSPO TESTER INSTRUCTIONS

for BOSCH type regulators

PART NO.	FLD	VOLT	SET POINT	PART NO.	FLD	VOLT	SET POINT
IB308	**B**	**24**	**28.0**				

1. POWER OFF: Set "Voltage Range" and "FLD" switches to desired setting. Connect the voltage regulator as indicated in the diagram below.

2. POWER ON: Field lamp should blink and meter will indicate approximately the set point voltage indicated in the above table.

3. ADDITIONAL TEST:

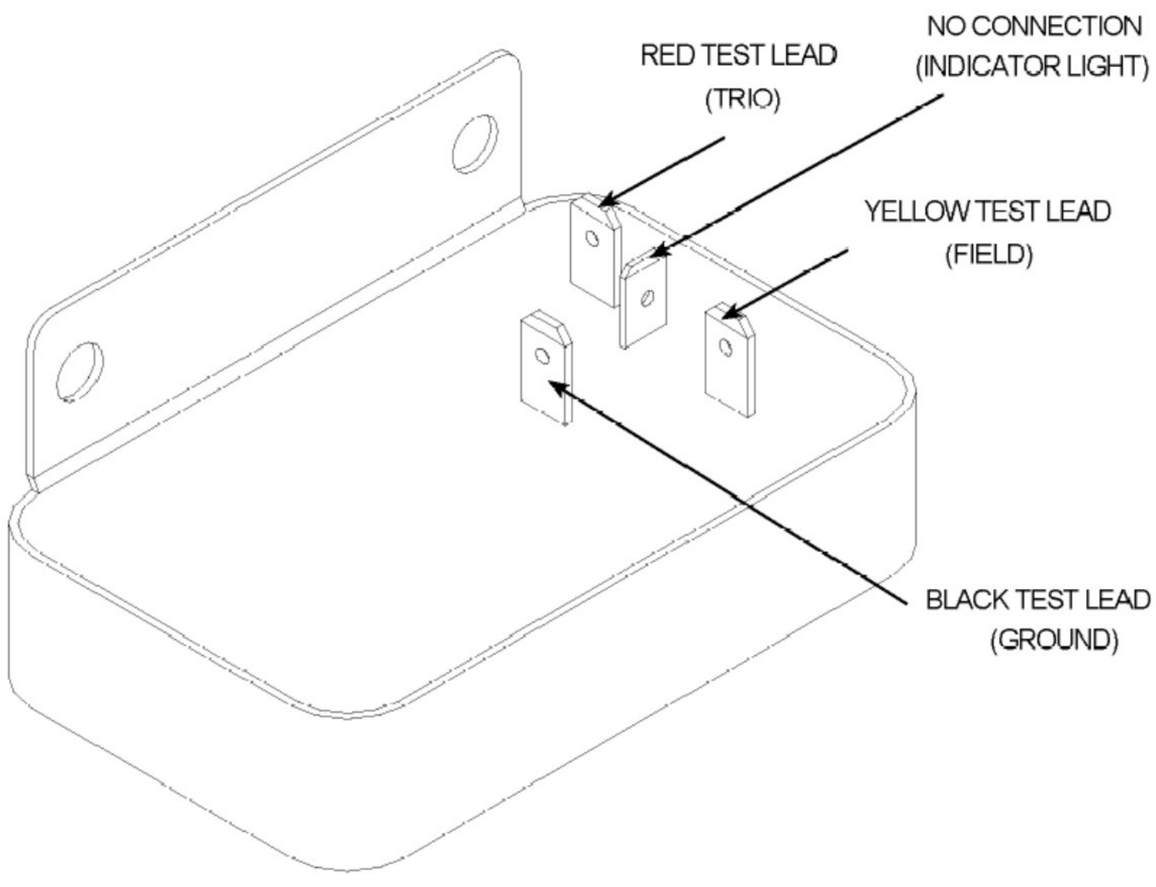

TRANSPO TESTER INSTRUCTIONS

for BOSCH type regulators

PART NO.	FLD	VOLT	SET POINT	PART NO.	FLD	VOLT	SET POINT
***IB343**	**A**	**12**	**14.4**				

1. POWER OFF: Set "Voltage Range" and "FLD" switches to desired setting. Connect the voltage regulator as indicated in the diagram below.

2. POWER ON: Field lamp should blink and meter will indicate approximately the set point voltage indicated in the above table.

3. ADDITIONAL TEST: Remove white test lead from terminal marked "STA"; meter will indicate set point and lamp light will come on. Reconnect the white test lead. Remove red test lead from the terminal marked "SENSE", the meter will indicate 12V, field lamp will stay on and lamp light will come on. Remove green test lead; field and lamp light will turn off.

*__Using VRC1000__: To check for over Voltage, push the “Over Voltage” switch and the “Lamp Indicator” will turn on between 16.0V and 17.1V.

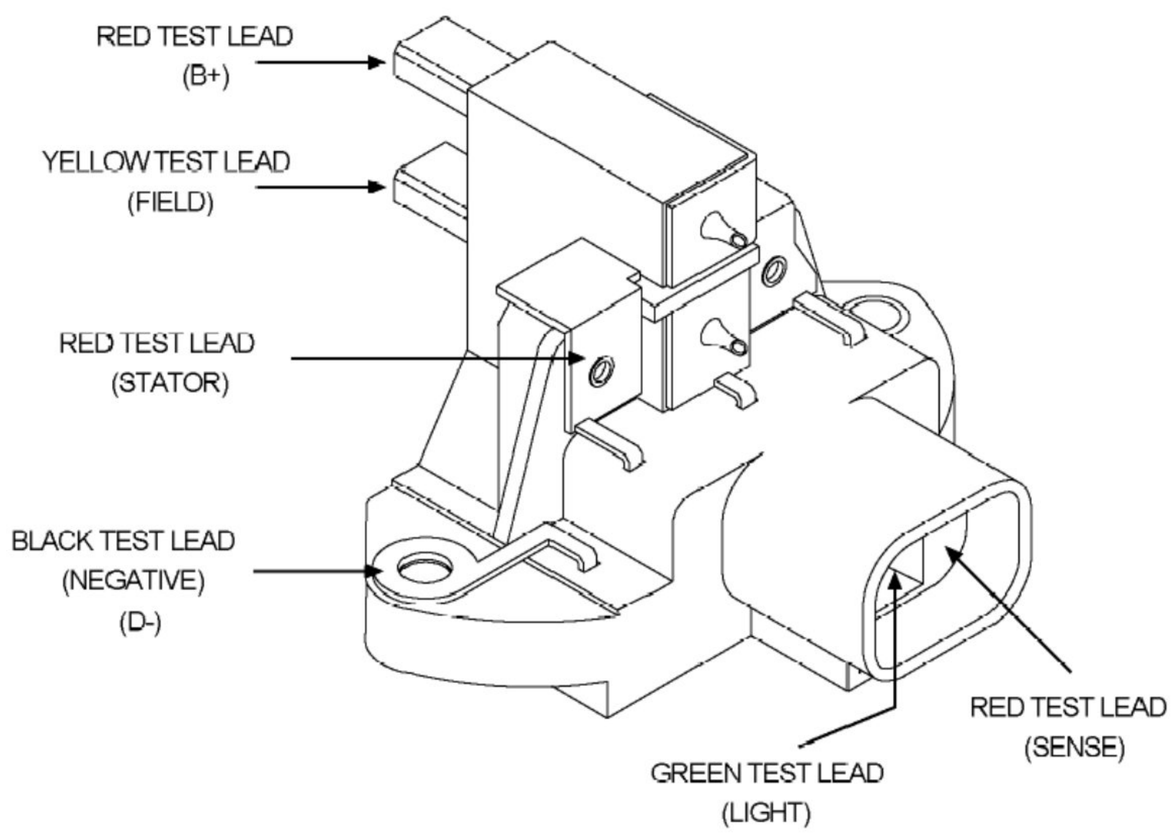

TRANSPO TESTER INSTRUCTIONS

for BOSCH type regulators

PART NO.	FLD	VOLT	SET POINT	PART NO.	FLD	VOLT	SET POINT
IB348	**A**	**12**	**15.0**	**IB353**	**A**	**12**	**14.5**
IB350	**A**	**12**	**14.1**	**IB354**	**A**	**12**	**14.1**
IB351	**A**	**12**	**14.5**	**IB355**	**A**	**12**	**14.5**
IB352	**A**	**12**	**14.1**	**IB356**	**A**	**12**	**14.8**

1. POWER OFF: Set "Voltage Range" and "FLD" switches to desired setting. Connect the voltage regulator as indicated in the diagram below.

2. POWER ON: Field lamp should blink and meter will indicate approximately the set point voltage indicated in the above table.

3. ADDITIONAL TEST:

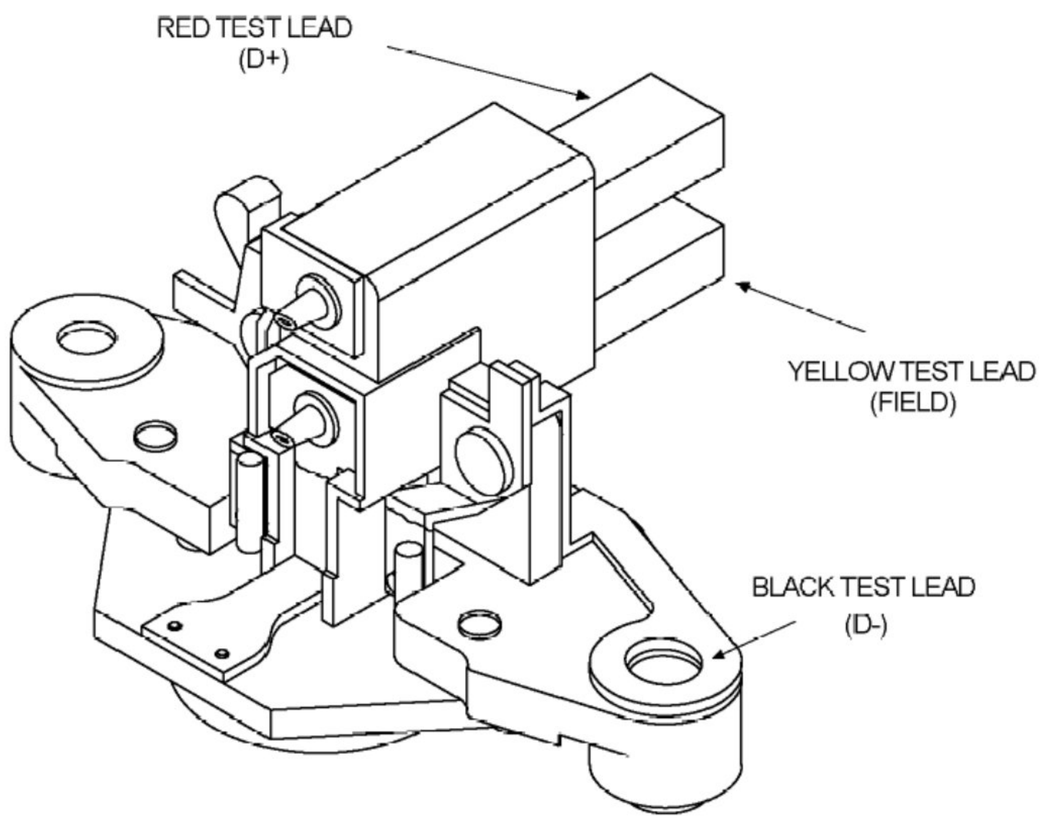

TRANSPO TESTER INSTRUCTIONS

for BOSCH type regulators

PART NO.	FLD	VOLT	SET POINT	PART NO.	FLD	VOLT	SET POINT
IB370	**A**	**12**	**14.5**				
IB370A	**A**	**12**	**14.5**				

1. POWER OFF: Set "Voltage Range" and "FLD" switches to desired setting. Connect the voltage regulator as indicated in the diagram below.

2. POWER ON: Field lamp should blink and meter will indicate approximately the set point voltage indicated in the above table.

3. ADDITIONAL TEST:

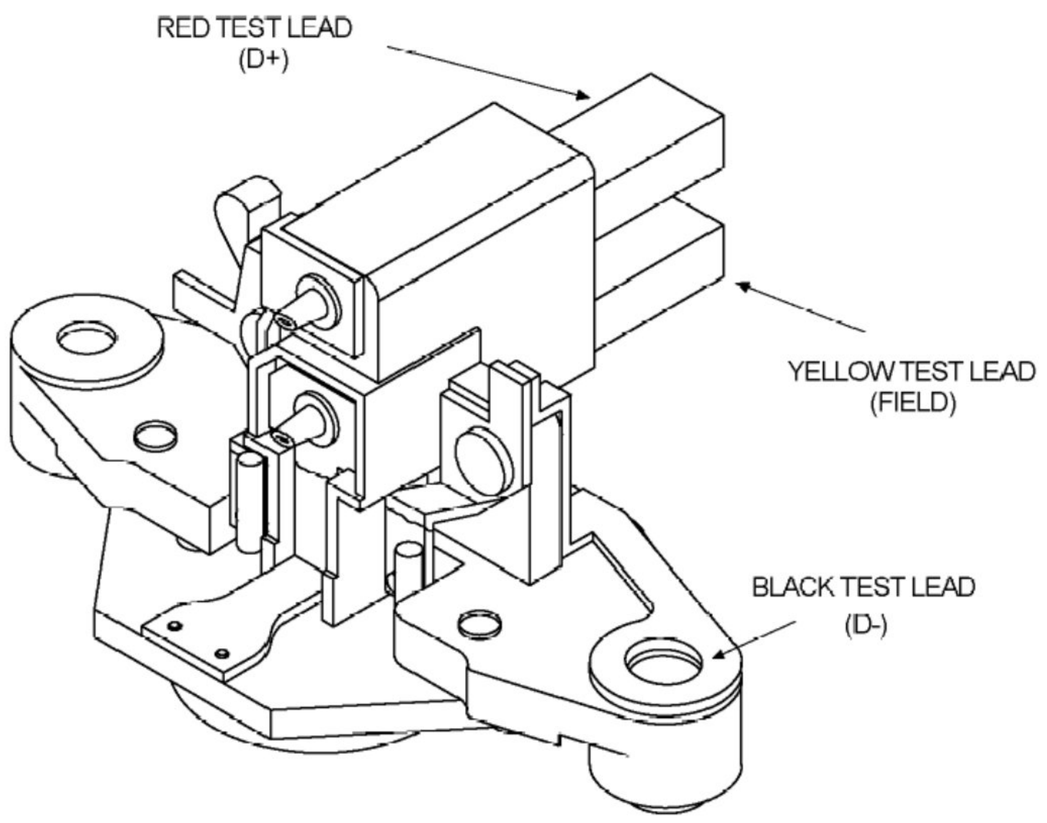

TRANSPO TESTER INSTRUCTIONS

for BOSCH type regulators

PART NO.	FLD	VOLT	SET POINT	PART NO.	FLD	VOLT	SET POINT
IB365	**A**	**24**	**28.5**				

1. POWER OFF: Set "Voltage Range" and "FLD" switches to desired setting. Connect the voltage regulator as indicated in the diagram below.

2. POWER ON: Field lamp should blink and meter will indicate approximately the set point voltage indicated in the above table.

3. ADDITIONAL TEST:

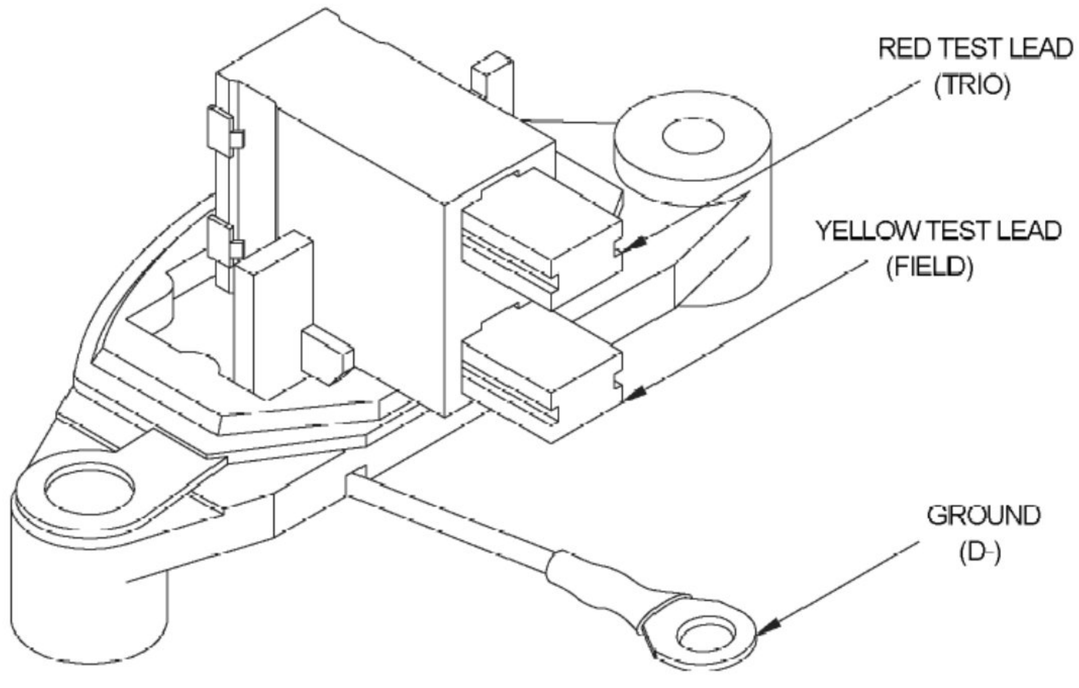

TRANSPO TESTER INSTRUCTIONS

for BOSCH type regulators

PART NO.	FLD	VOLT	SET POINT	PART NO.	FLD	VOLT	SET POINT
IB386	**A**	**28**	**28**				

1. POWER OFF: Set "Voltage Range" and "FLD" switches to desired setting. Connect the voltage regulator as indicated in the diagram below.

2. POWER ON: Field lamp should blink and meter will indicate approximately the set point voltage indicated in the above table.

3. ADDITIONAL TEST:

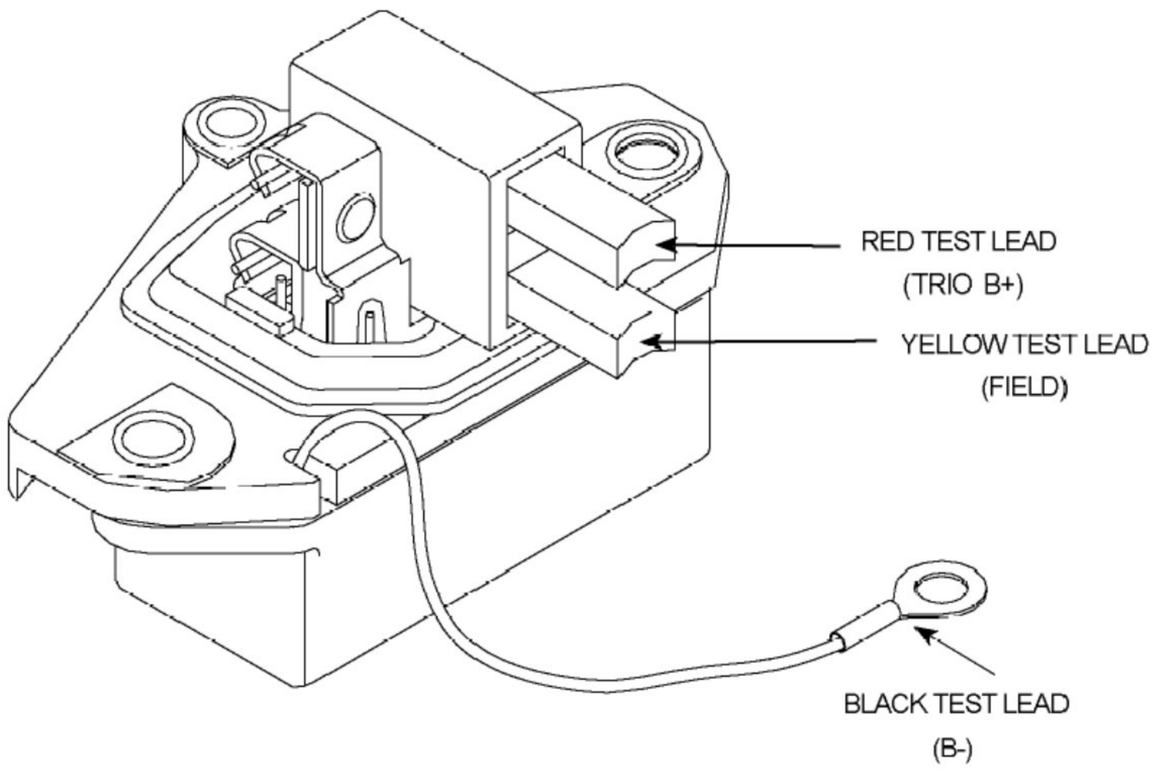

TRANSPO TESTER INSTRUCTIONS

for BOSCH type regulators

PART NO.	FLD	VOLT	SET POINT	PART NO.	FLD	VOLT	SET POINT
IB398	**A**	**12**	**14.5**				

1. POWER OFF: Set "Voltage Range" and "FLD" switches to desired setting. Connect the voltage regulator as indicated in the diagram below.

2. POWER ON: Field lamp should blink and meter will indicate approximately the set point voltage indicated in the above table.

3. ADDITIONAL TEST:

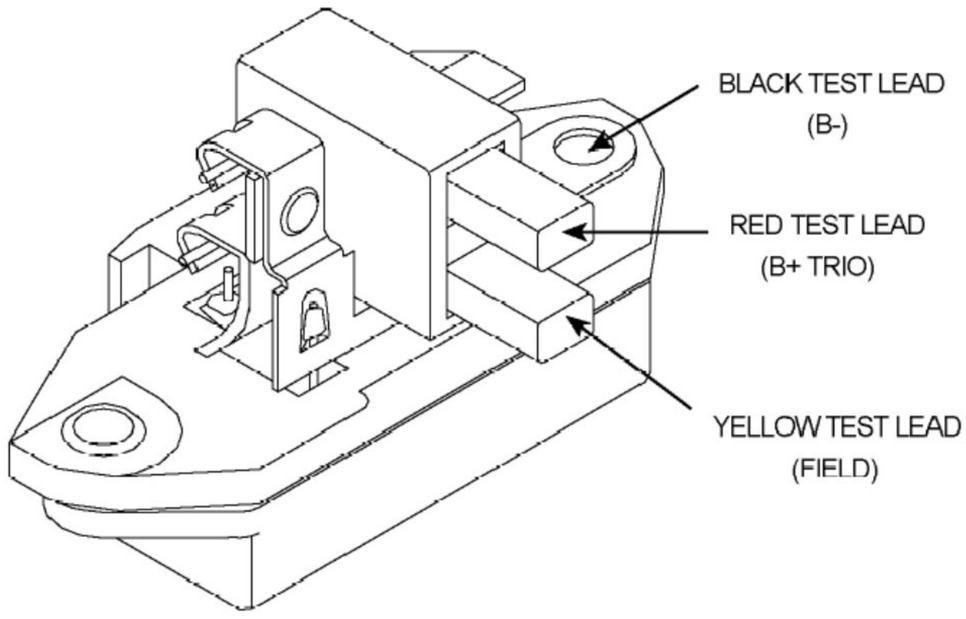

TRANSPO TESTER INSTRUCTIONS

for BOSCH type regulators

PART NO.	FLD	VOLT	SET POINT	PART NO.	FLD	VOLT	SET POINT
IB382	**A**	**24**	**28.8**				
IB381	**A**	**24**	**28.1**				
IB316	**A**	**24**	**28.5**				

1. POWER OFF: Set "Voltage Range" and "FLD" switches to desired setting. Connect the voltage regulator as indicated in the diagram below.

2. POWER ON: Field lamp should blink and meter will indicate approximately the set point voltage indicated in the above table.

3. ADDITIONAL TEST:

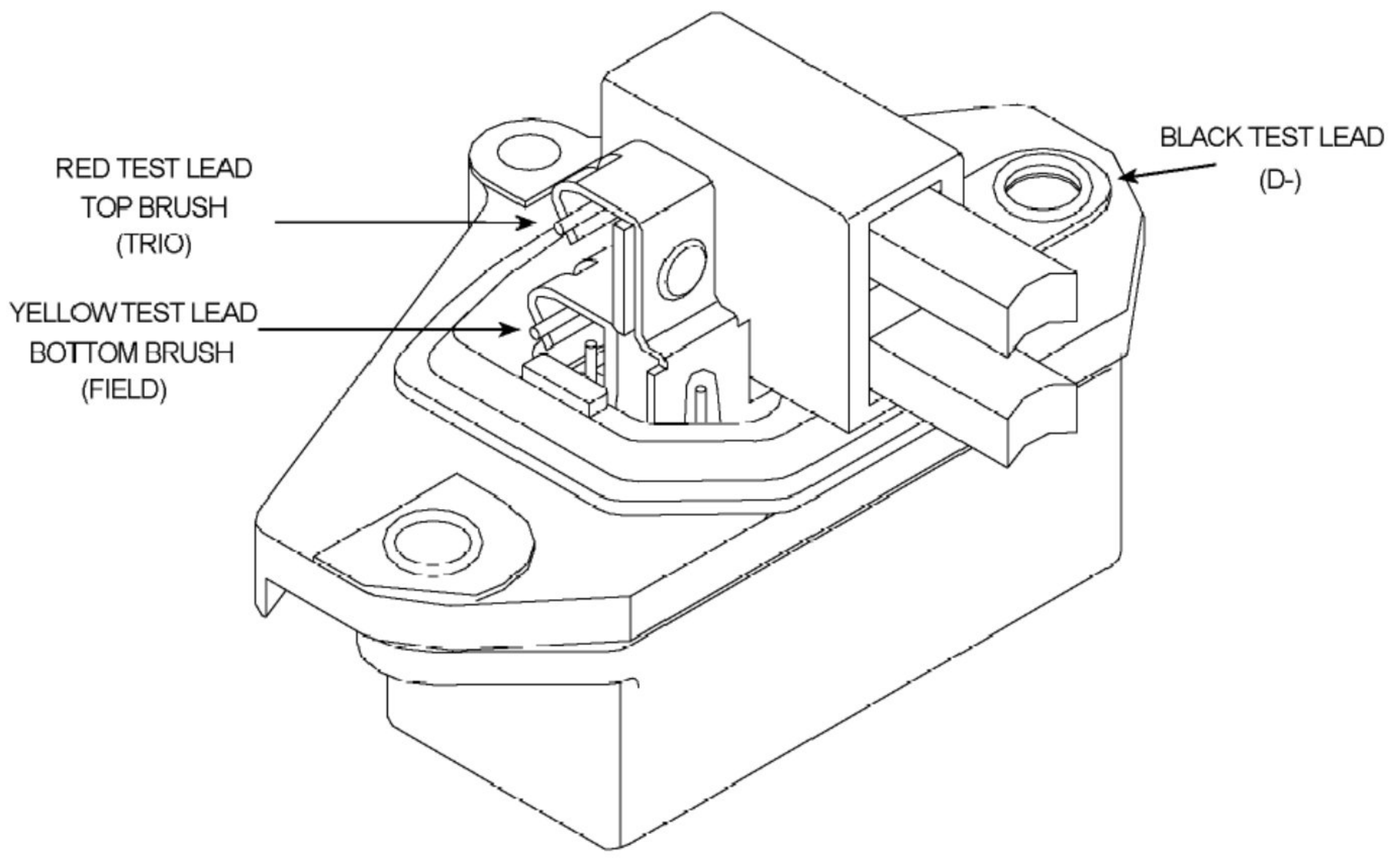

TRANSPO TESTER INSTRUCTIONS

for BOSCH type regulators

PART NO.	FLD	VOLT	SET POINT	PART NO.	FLD	VOLT	SET POINT
IB511	**A**	**12**	**14.5**				

1. POWER OFF: Set "Voltage Range" and "FLD" switches to desired setting. Connect the voltage regulator as indicated in the diagram below.

2. POWER ON: Field lamp should blink and meter will indicate approximately the set point voltage indicated in the above table.

3. ADDITIONAL TEST:

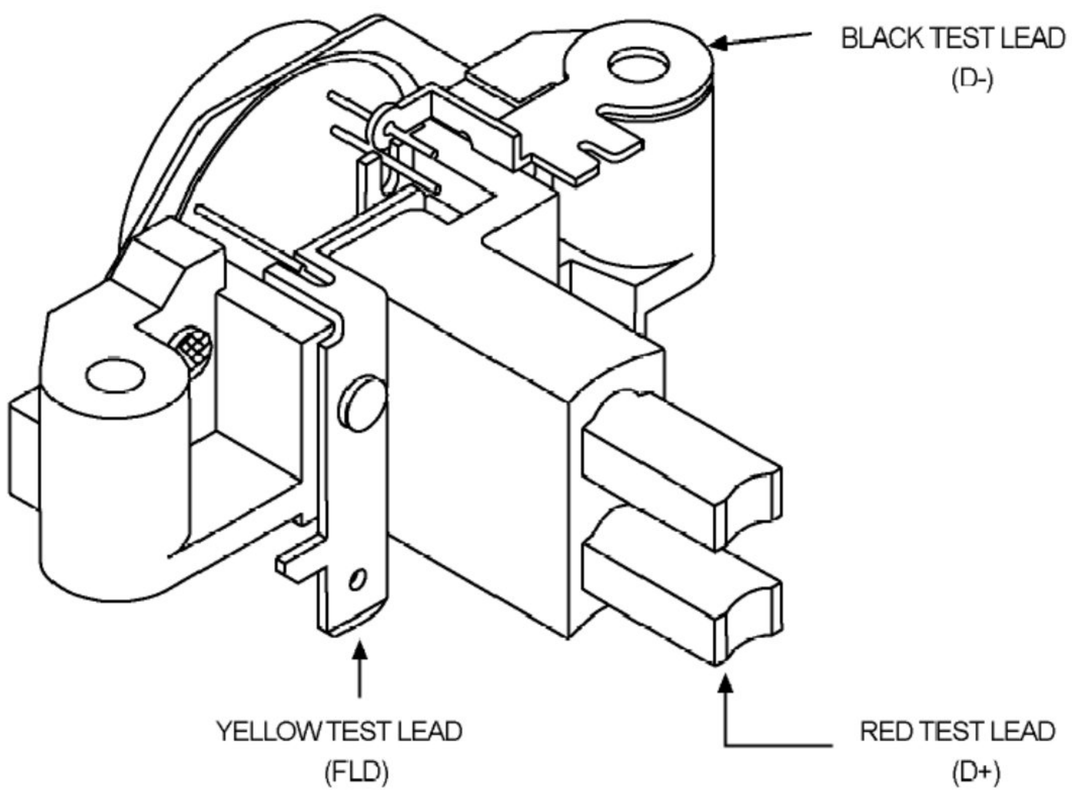

TRANSPO TESTER INSTRUCTIONS

for BOSCH type regulators

PART NO.	FLD	VOLT	SET POINT	PART NO.	FLD	VOLT	SET POINT
IB512	**A**	**12**	**14.6**				

1. POWER OFF: Set "Voltage Range" and "FLD" switches to desired setting. Connect the voltage regulator as indicated in the diagram below.

2. POWER ON: Field lamp should blink and meter will indicate approximately the set point voltage indicated in the above table.

3. ADDITIONAL TEST:

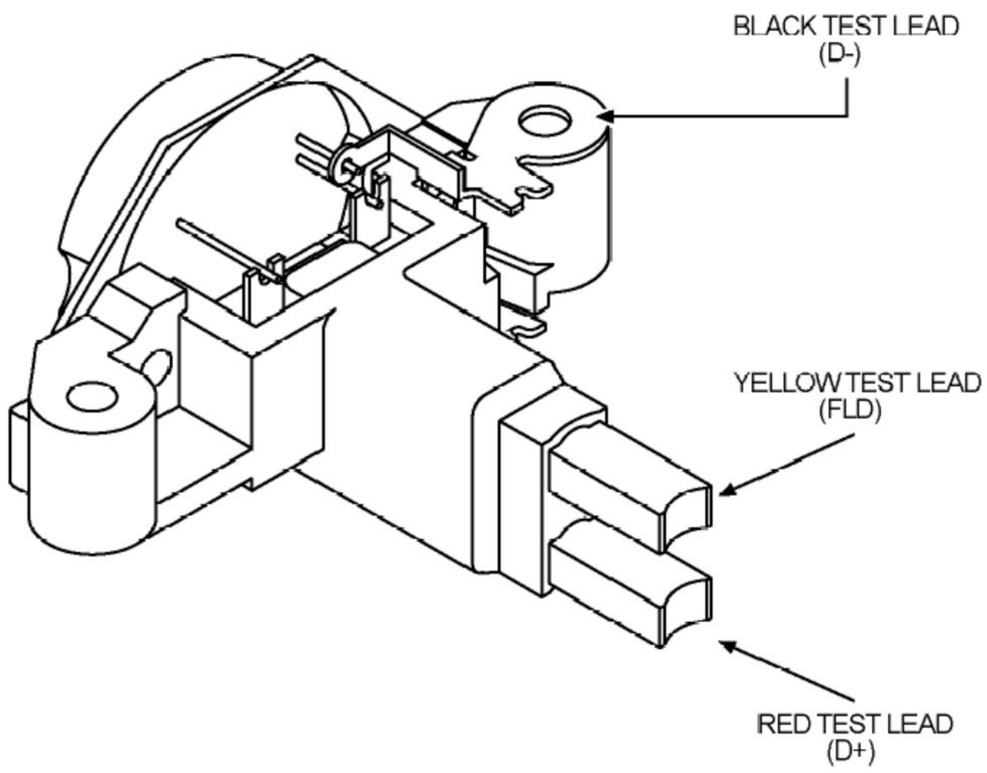

TRANSPO TESTER INSTRUCTIONS

for BOSCH type regulators

PART NO.	FLD	VOLT	SET POINT	PART NO.	FLD	VOLT	SET POINT
IB388	**A**	**12**	**14.0**				

1. POWER OFF: Set "Voltage Range" and "FLD" switches to desired setting. Connect the voltage regulator as indicated in the diagram below.

2. POWER ON: Field lamp should blink and meter will indicate approximately the set point voltage indicated in the above table.

3. ADDITIONAL TEST:

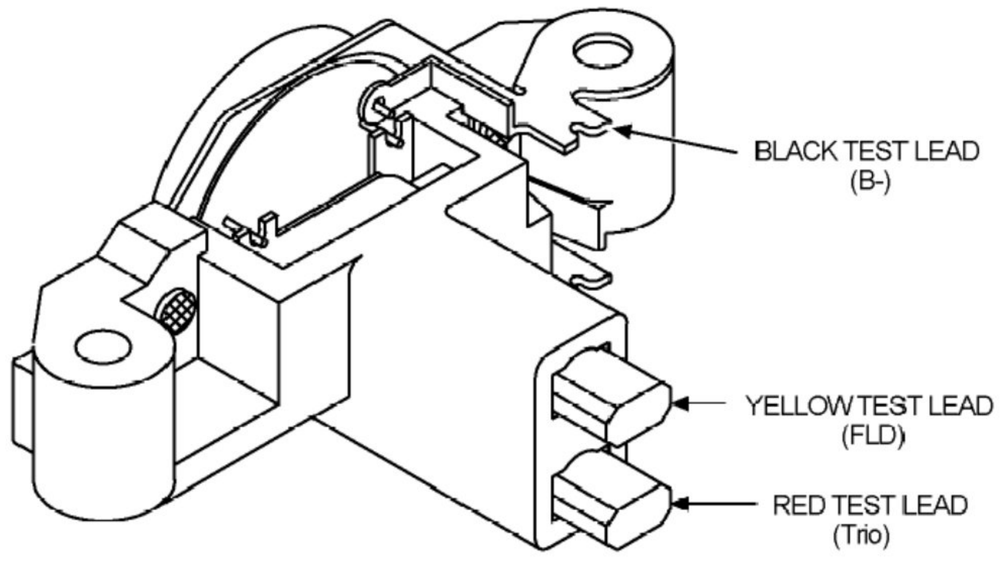

TRANSPO TESTER INSTRUCTIONS

for BOSCH type regulators

PART NO.	FLD	VOLT	SET POINT	PART NO.	FLD	VOLT	SET POINT
IB501	**A**	**12**	**14.3**				

1. POWER OFF: Set "Voltage Range" and "FLD" switches to desired setting. Connect the voltage regulator as indicated in the diagram below.

2. POWER ON: Field lamp should blink and meter will indicate approximately the set point voltage indicated in the above table.

3. ADDITIONAL TEST:

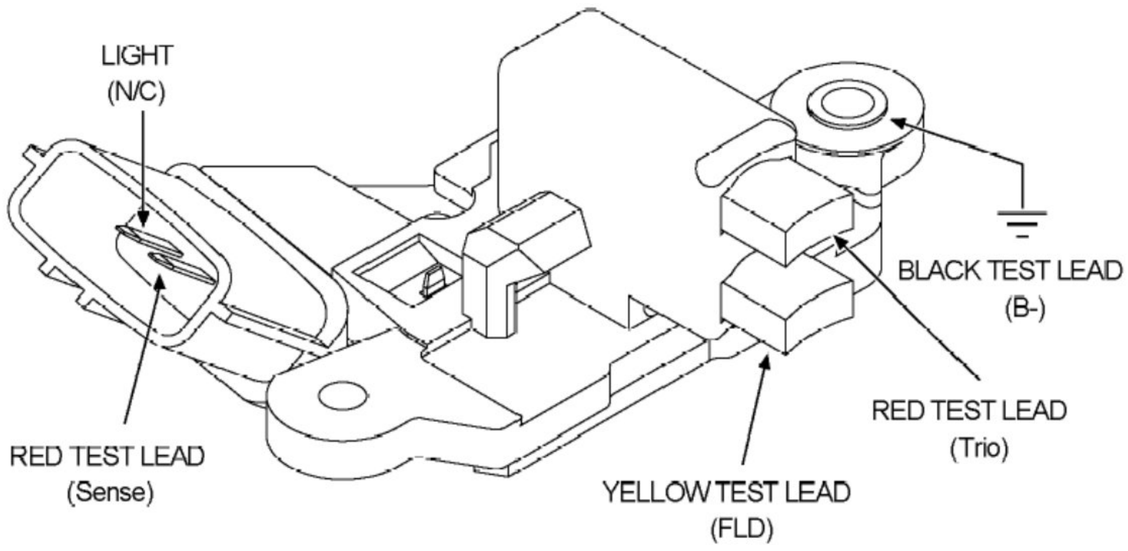

TRANSPO TESTER INSTRUCTIONS

for BOSCH type regulators

PART NO.	FLD	VOLT	SET POINT	PART NO.	FLD	VOLT	SET POINT
IB399	**A**	**12**	**14.2**				

1. POWER OFF: Set "Voltage Range" and "FLD" switches to desired setting. Connect the voltage regulator as indicated in the diagram below.

2. POWER ON: Field lamp should blink and meter will indicate approximately the set point voltage indicated in the above table.

3. ADDITIONAL TEST:

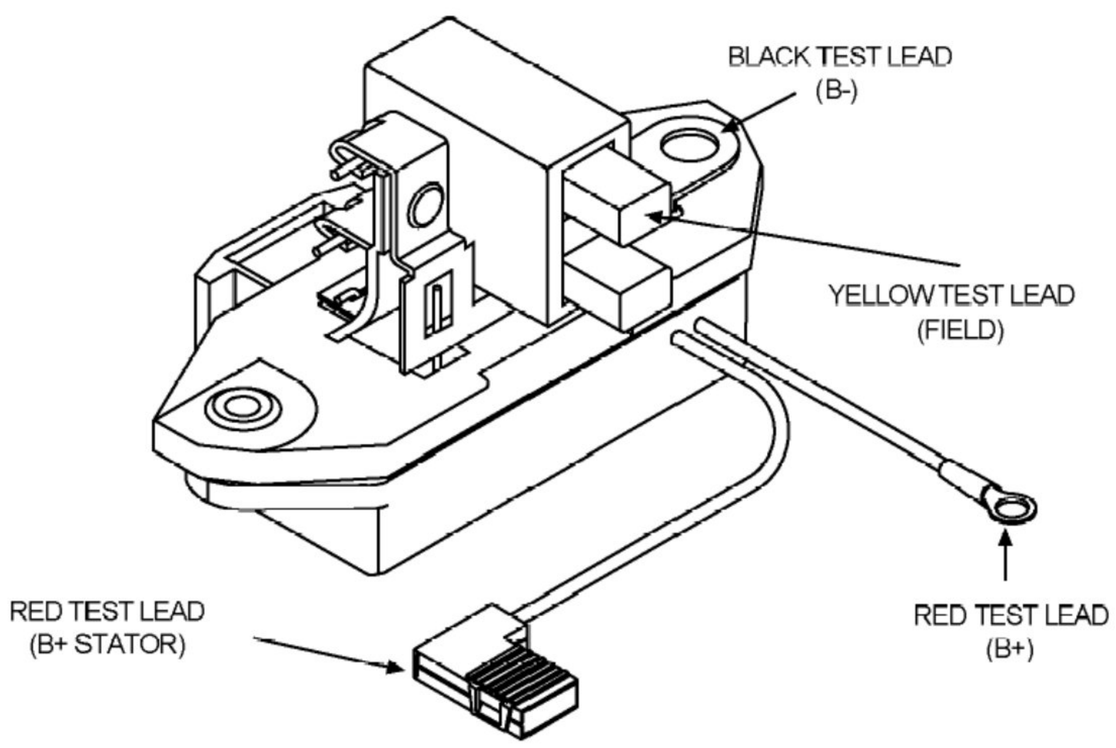

TRANSPO TESTER INSTRUCTIONS

for BOSCH type regulators

PART NO.	FLD	VOLT	SET POINT	PART NO.	FLD	VOLT	SET POINT
IB400	**A**	**12**	**14.3**				

1. POWER OFF: Set "Voltage Range" and "FLD" switches to desired setting. Connect the voltage regulator as indicated in the diagram below.

2. POWER ON: Field lamp should blink and meter will indicate approximately the set point voltage indicated in the above table.

3. ADDITIONAL TEST:

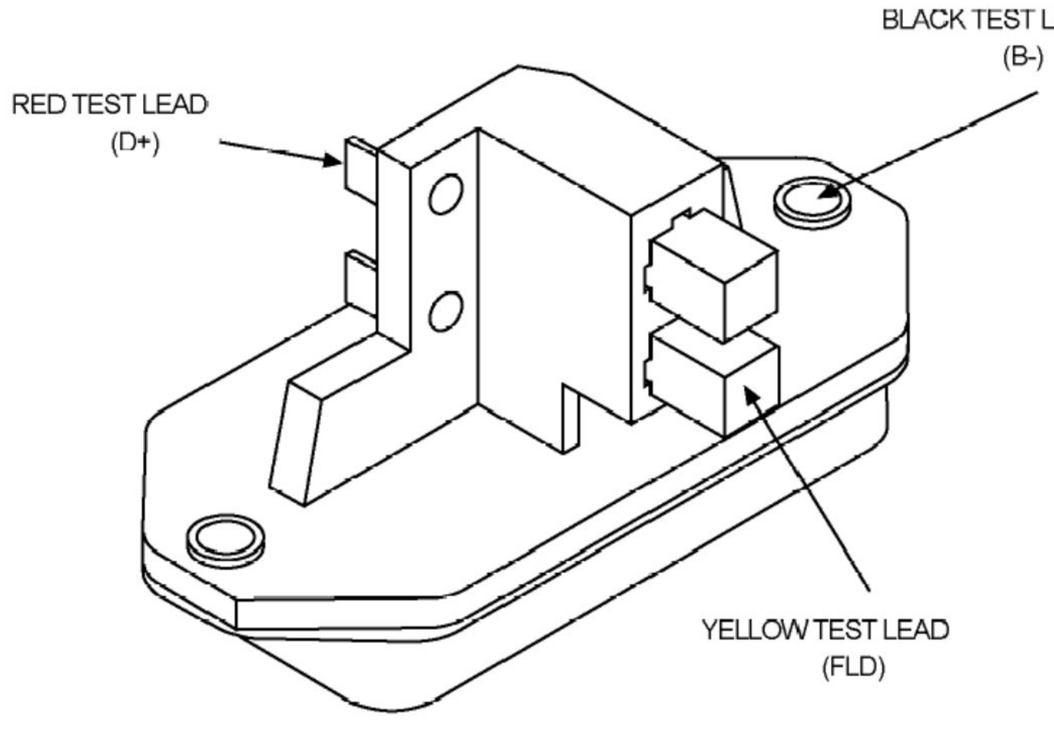

TRANSPO TESTER INSTRUCTIONS

for BOSCH type regulators

PART NO.	FLD	VOLT	SET POINT	PART NO.	FLD	VOLT	SET POINT
IB390	**A**	**A**	**14.5**				

1. POWER OFF: Set "Voltage Range" and "FLD" switches to desired setting. Connect the voltage regulator as indicated in the diagram below.

2. POWER ON: Field lamp should blink and meter will indicate approximately the set point voltage indicated in the above table.

3. ADDITIONAL TEST:

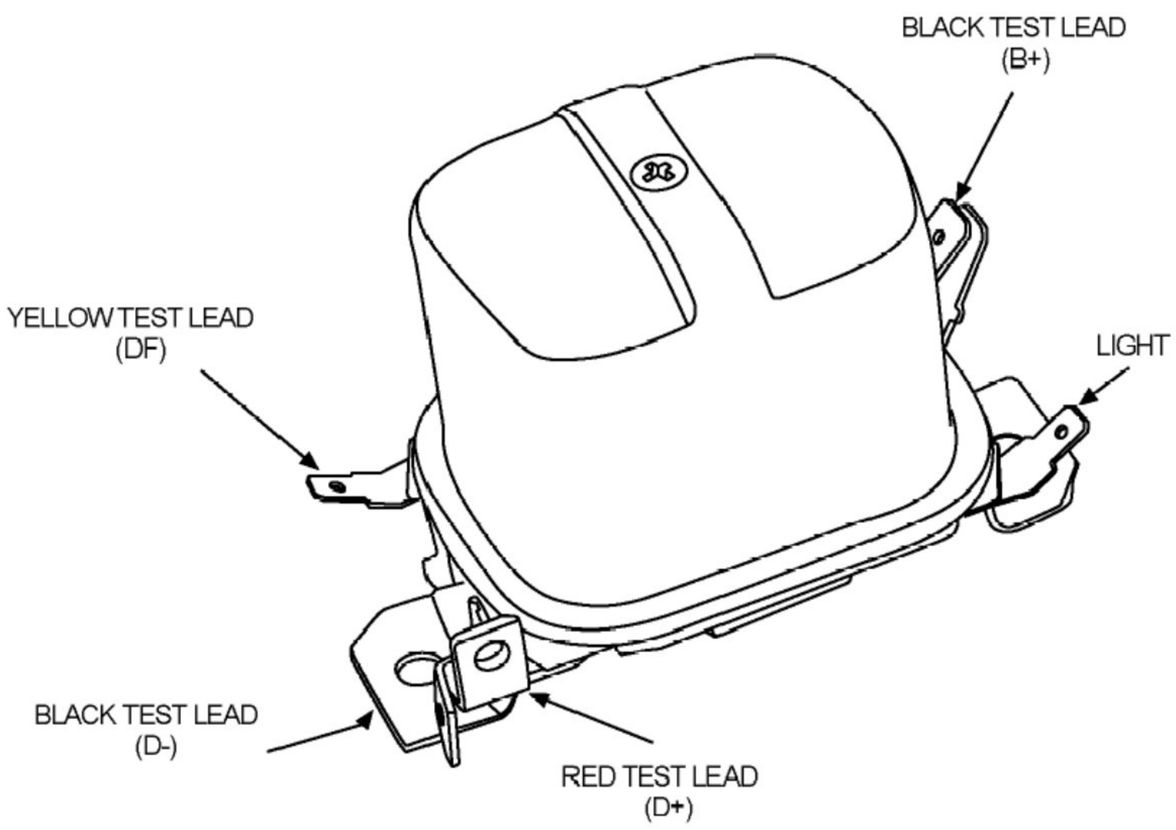

TRANSPO TESTER INSTRUCTIONS

for BOSCH type regulators

PART NO.	FLD	VOLT	SET POINT	PART NO.	FLD	VOLT	SET POINT
IB360	**A**	**12**	**14.1**	**IB364**	**A**	**24**	**29.0**
IB368	**A**	**12**	**14.1**	**IB369**	**A**	**24**	**28.0**
IB362	**A**	**24**	**28.00**	**IB366-1**	**A**	**24**	**28.5**
IB363	**A**	**24**	**28.5**				

1. POWER OFF: Set "Voltage Range" and "FLD" switches to desired setting. Connect the voltage regulator as indicated in the diagram below.

2. POWER ON: Field lamp should blink and meter will indicate approximately the set point voltage indicated in the above table.

3. ADDITIONAL TEST:

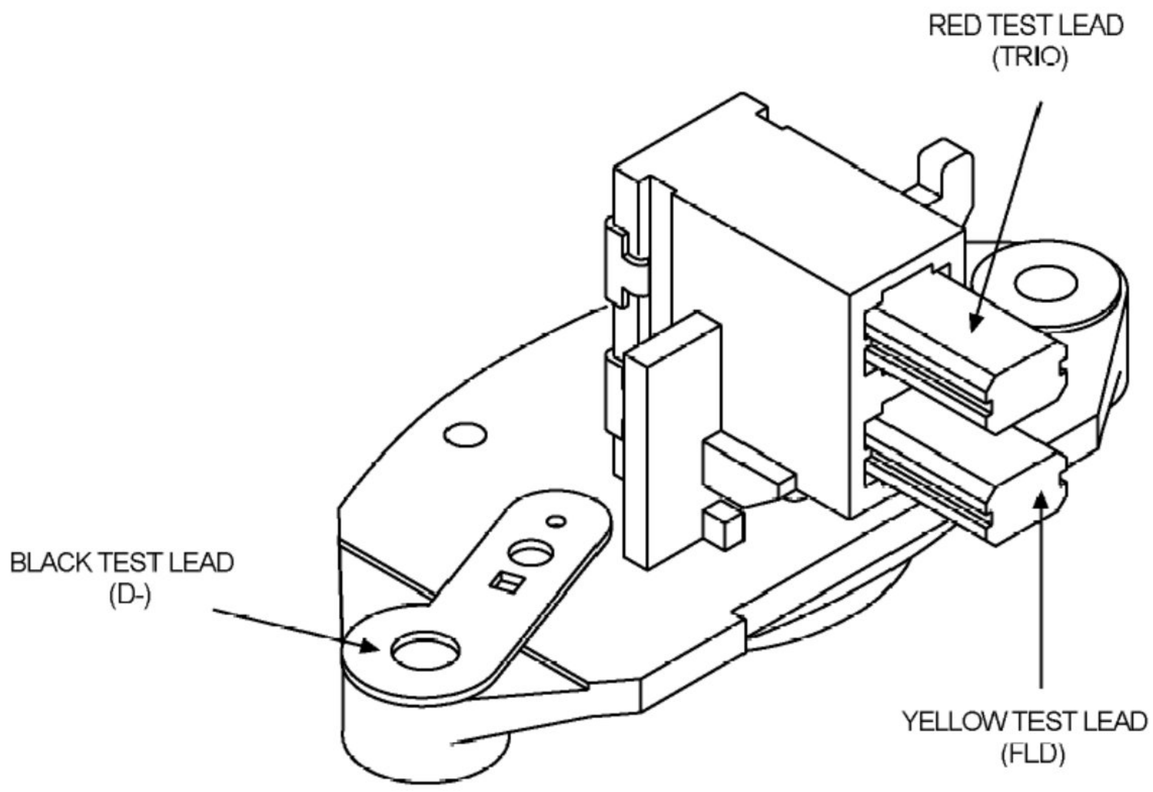

TRANSPO TESTER INSTRUCTIONS

for BOSCH type regulators

PART NO.	FLD	VOLT	SET POINT	PART NO.	FLD	VOLT	SET POINT
IB225	**A**	**12**	**14.5**				

1. POWER OFF: Set "Voltage Range" and "FLD" switches to desired setting. Connect the voltage regulator as indicated in the diagram below.

2. POWER ON: Field lamp should blink and meter will indicate approximately the set point voltage indicated in the above table.

3. ADDITIONAL TEST: Remove white test lead from terminal marked "Stator" field light and lamp will come on and voltage will show 12 volts. Remove green test lead from "light" terminal , field light will go out and voltage stays at 12 volts.

Using VRC1000: To check for over Voltage, push the “Over Voltage” switch and the “Lamp Indicator” will turn on between 16.0V and 17.1V.

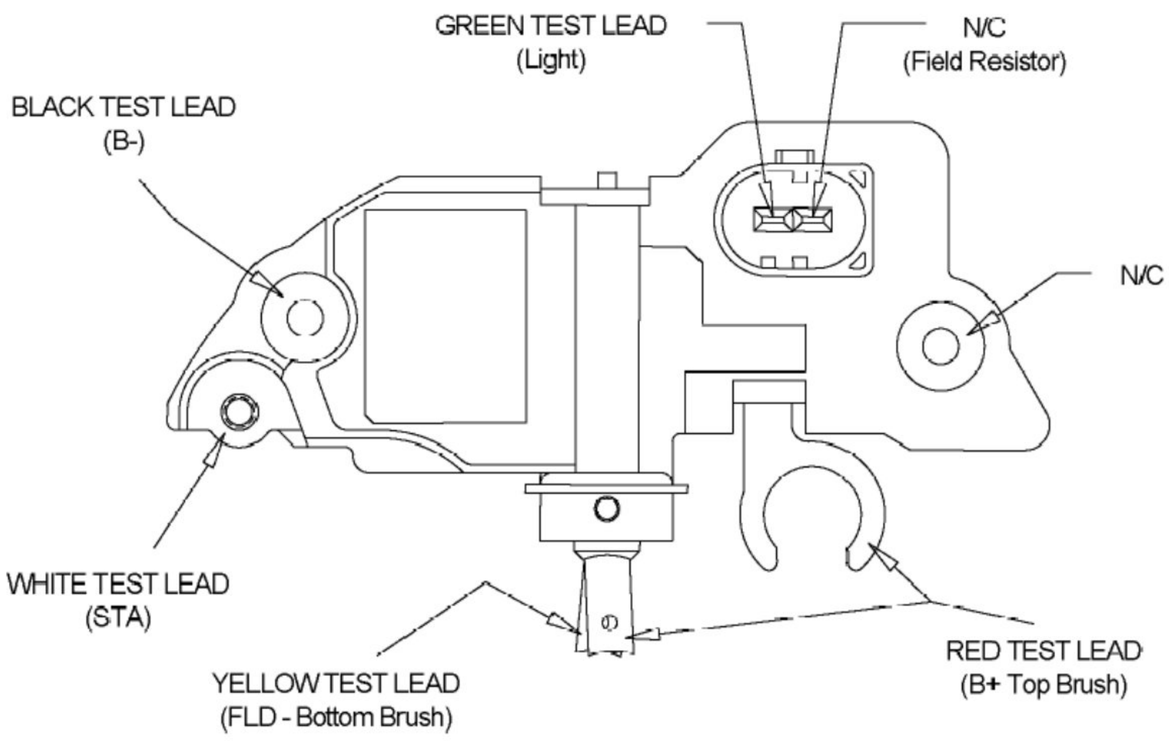

TRANSPO TESTER INSTRUCTIONS

for BOSCH type regulators

PART NO.	FLD	VOLT	SET POINT	PART NO.	FLD	VOLT	SET POINT
IB241	**A**	**12**	**14.4**				

1. POWER OFF: Set "Voltage Range" and "FLD" switches to desired setting. Connect the voltage regulator as indicated in the diagram below.

2. POWER ON: Field lamp should blink and meter will indicate approximately the set point voltage indicated in the above table.

3. ADDITIONAL TEST: Remove white test lead from terminal marked "Stator" volts will drop to 12 volts; field light and lamp light will come on. Remove green test lead from terminal marked "light", field and lamp light will go out and voltage remains at 12 volts.

Using VRC1000: To check for over Voltage, push the “Over Voltage” switch and the “Lamp Indicator” will turn on between 16.0V and 17.1V.

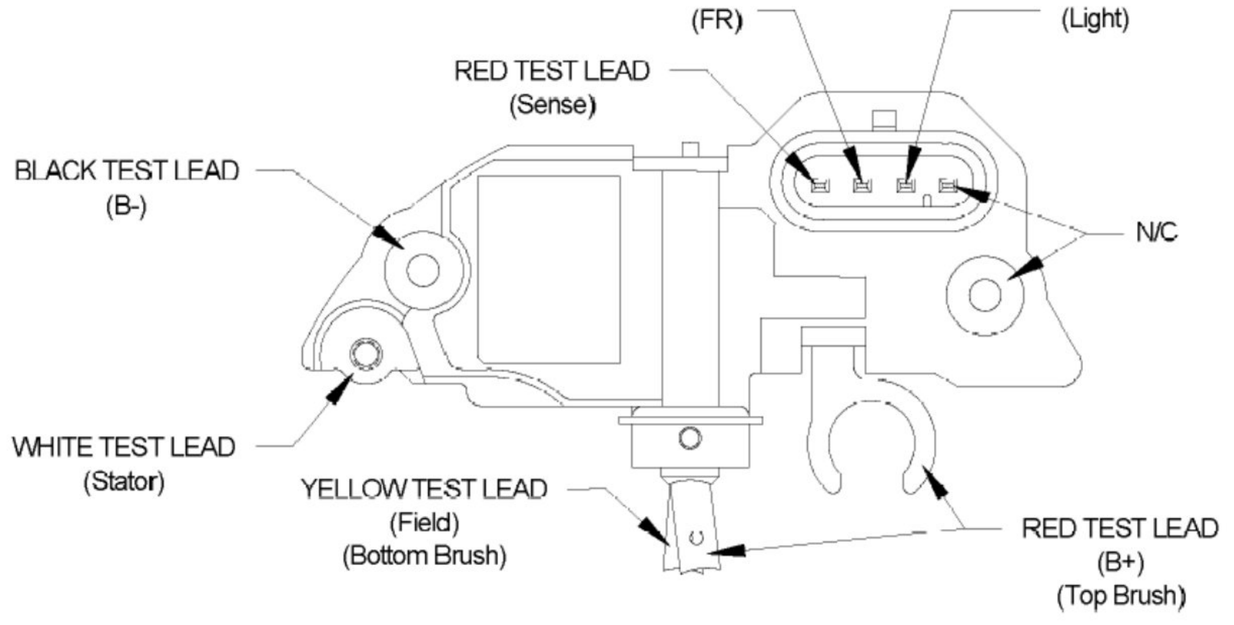

TRANSPO TESTER INSTRUCTIONS

for BOSCH type regulators

PART NO.	FLD	VOLT	SET POINT	PART NO.	FLD	VOLT	SET POINT
IB392BG	**A**	**12**	**14.4**				

1. POWER OFF: Set "Voltage Range" and "FLD" switches to desired setting. Connect the voltage regulator as indicated in the diagram below.

2. POWER ON: Field lamp should blink and meter will indicate approximately the set point voltage indicated in the above table.

3. ADDITIONAL TEST: Remove white test lead from terminal marked "STA". Field lamp remain fully on and the meter will indicate approximately 12V. Reconnect the white test lead. Remove red test lead from the terminal marked "S", field lamp will turn off, the indicator light will turn on and the meter will indicate 12V. **Using VRC1000**: To check for over Voltage, push the “Over Voltage” switch and the “Lamp Indicator” will turn on between 16.0V and 17.1V.

NOTE: Connect B- (black) test lead last, already having turned on the tester "ON" switch.

- 20 ampere 60 volt field transistor voltage saturation test @ 5 amps
  13.50 volts = 150 to 250 milli-volts
- Undervoltage Lamp Indication = 8.50 volts to 10.00 volts
- Overvoltage Lamp Indication = 16.00 volts to 17.10 volts
- Current Leakage = 2.0 milli-amps

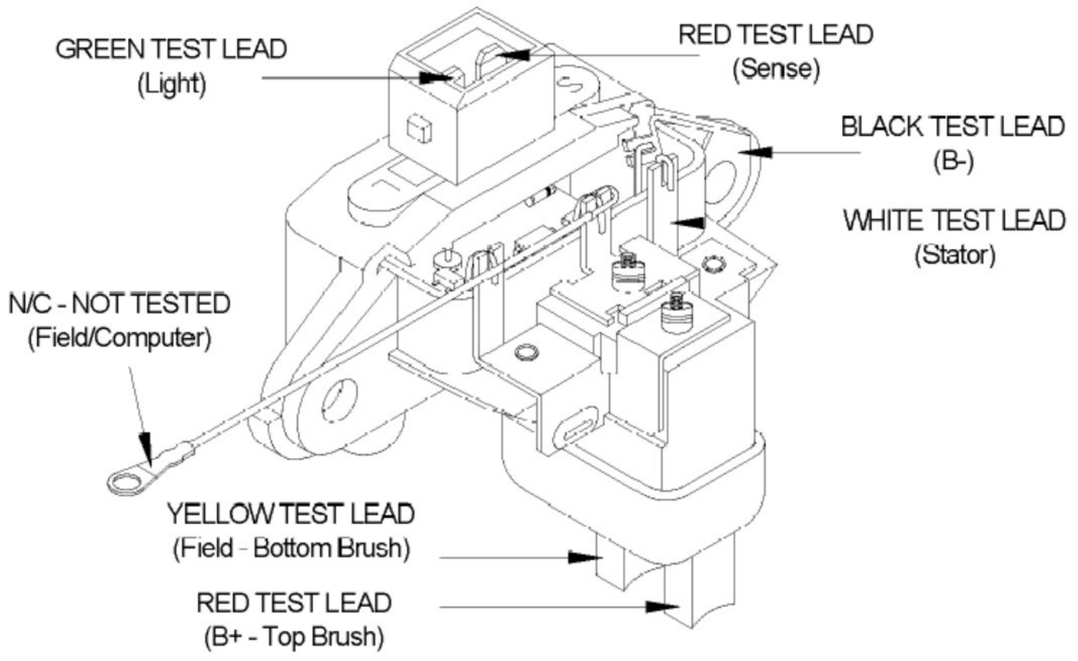

TRANSPO TESTER INSTRUCTIONS

for BOSCH type regulators

PART NO.	FLD	VOLT	SET POINT	PART NO.	FLD	VOLT	SET POINT
IB251	**A**	**12**	**14.4**				

1. POWER OFF: Set "Voltage Range" and "FLD" switches to desired setting. Connect the voltage regulator as indicated in the diagram below.

2. POWER ON: Field lamp should blink and meter will indicate approximately the set point voltage indicated in the above table.

3. ADDITIONAL TEST:

1. Power off: set Voltage Range and FLD switches to desired setting. Connect the voltage regulator as indicated in the diagram below.
2. Power On: Field light should blink and meter will indicate approximately the set point voltage indicated in the above table.
3. Additional Test: Remove white test lead from terminal marked "Stator" field light and "Lamp" light will come on and voltage will show 12 volts. Reconnect "Stator" wire
4. Additional Test: Remove green test lead from "Light" terminal, field light will continue to blink and meter will indicate approximately the set point voltage indicated in the above table. Reconnect "Lamp" wire.
5. Additional Test: Remove ignition, field light will continue to blink, "Lamp" light will turn on and meter will

indicate approximately the set point voltage indicated in the above table.

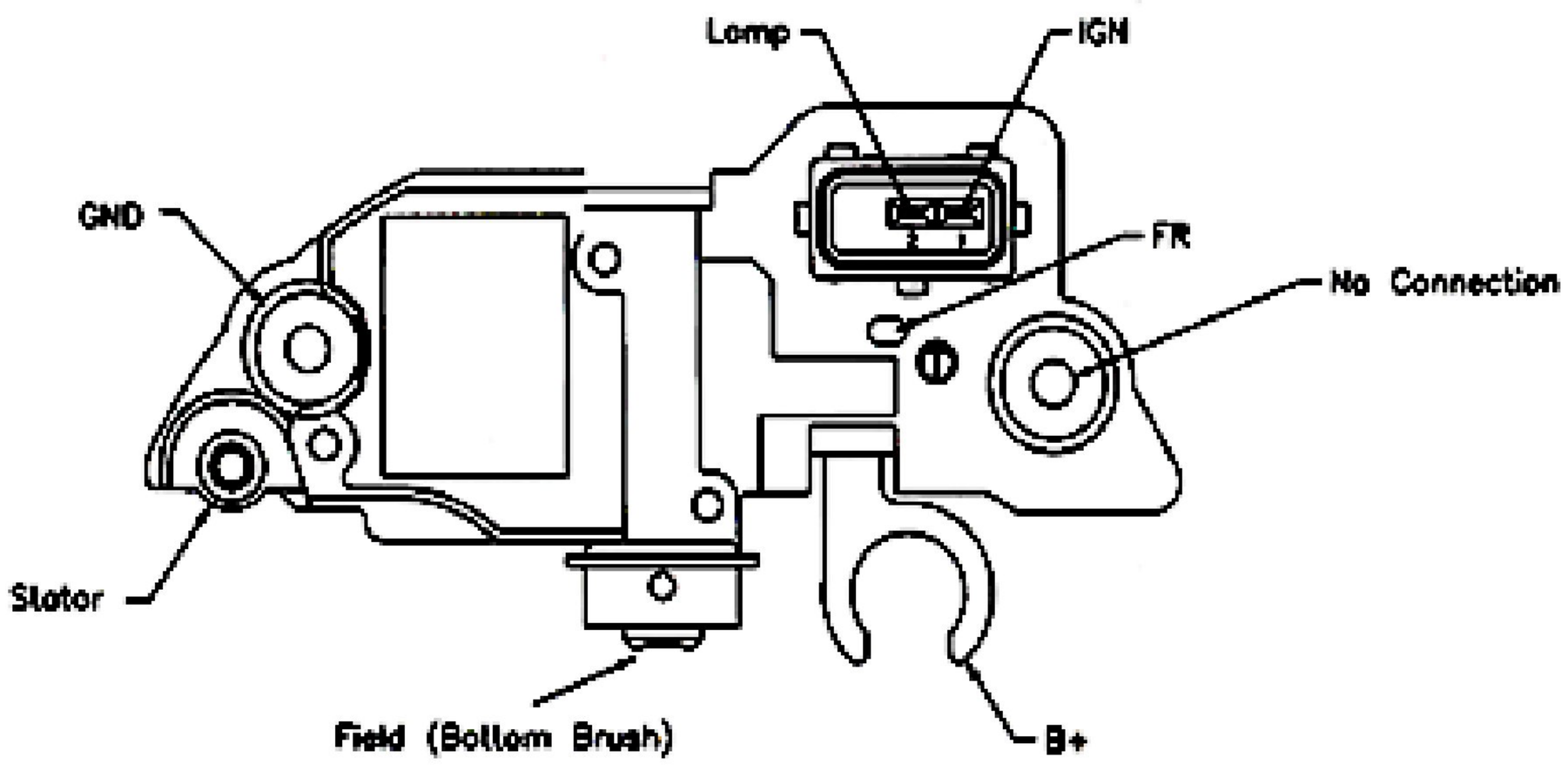

TRANSPO TESTER INSTRUCTIONS

for BOSCH type regulators

PART NO.	FLD	VOLT	SET POINT	PART NO.	FLD	VOLT	SET POINT
IB229	**A**	**12**	**14.5**				

1. POWER OFF: Set "Voltage Range" and "FLD" switches to desired setting. Connect the voltage regulator as indicated in the diagram below.

2. POWER ON: Field lamp should blink and meter will indicate approximately the set point voltage indicated in the above table.

3. ADDITIONAL TEST: Remove White Test lead from Stator Terminal, Lamp will come on, display will show 12 volts and field light will stay on. Remove Green Test lead and field light will turn off.

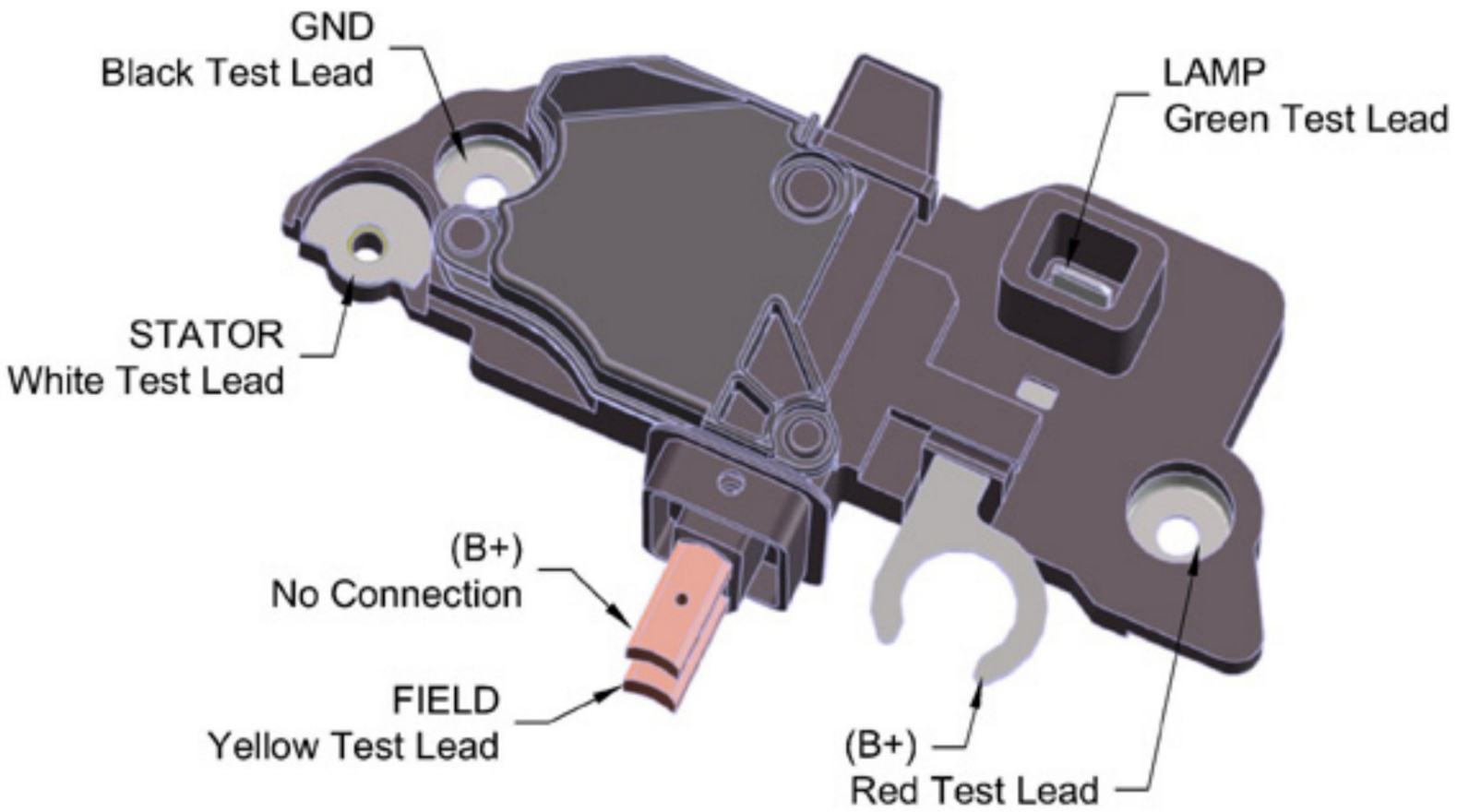

TRANSPO TESTER INSTRUCTIONS

for BOSCH type regulators

PART NO.	FLD	VOLT	SET POINT	PART NO.	FLD	VOLT	SET POINT
IB235	**A**	**12**	**14.5**				

1. POWER OFF: Set "Voltage Range" and "FLD" switches to desired setting. Connect the voltage regulator as indicated in the diagram below.

2. POWER ON: Field lamp should blink and meter will indicate approximately the set point voltage indicated in the above table.

3. ADDITIONAL TEST: Remove White Test Lead from Stator, Lamp Light comes on and Field Light stay on.
Remove Green Test Lead from Light terminal, Lamp Light and Field Light turn off.

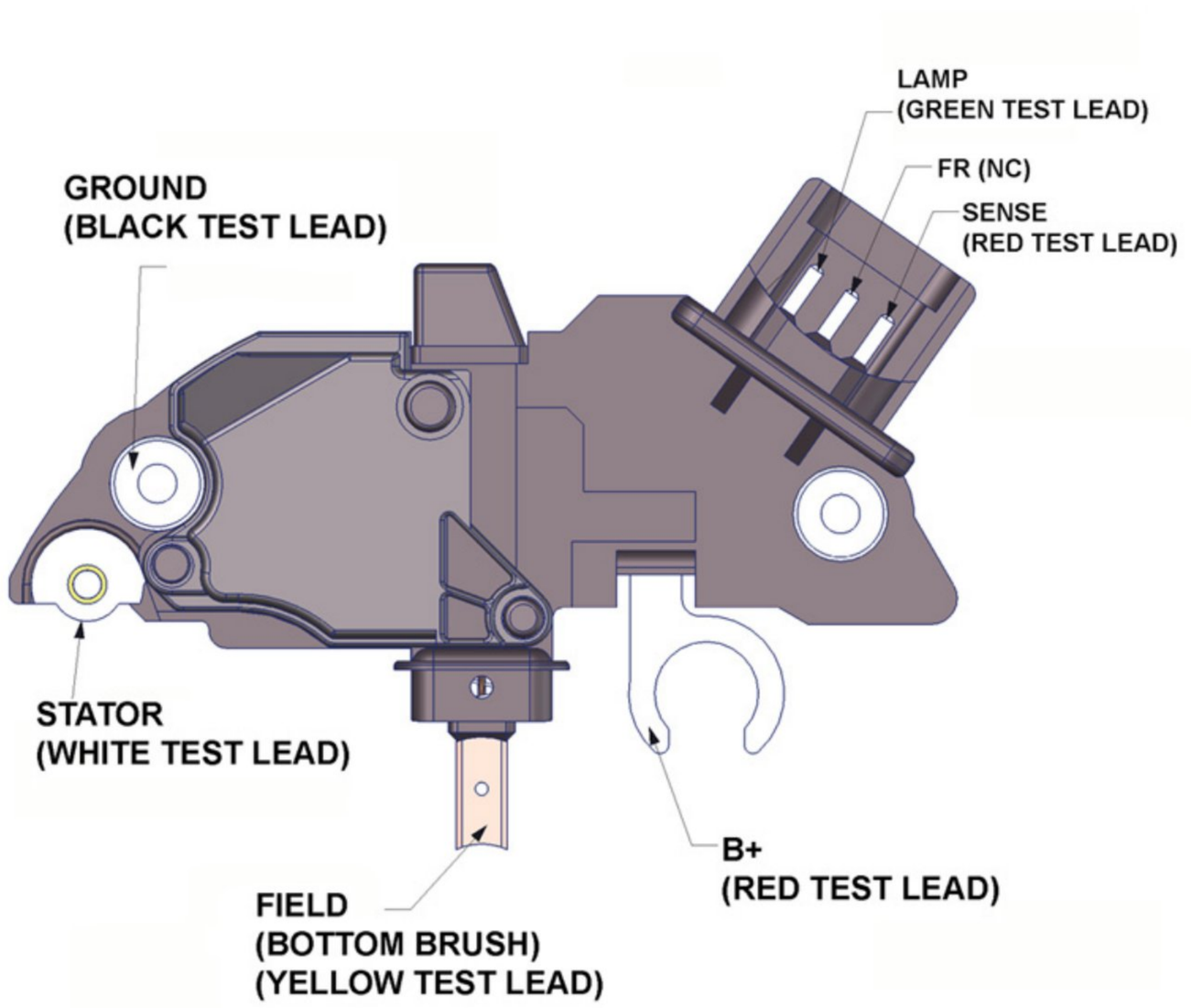

TRANSPO TESTER INSTRUCTIONS

for C.A.V. type regulators

PART NO.	FLD	VOLT	SET POINT	PART NO.	FLD	VOLT	SET POINT
CE520	**A**	**24**	**HI 28.8**				
CE520	**A**	**24**	**MID 27.8**				
CE520	**A**	**24**	**LO 26.7**				

1. POWER OFF: Set "Voltage Range" and "FLD" switches to desired setting. Connect the voltage regulator as indicated in the diagram below.

2. POWER ON: Field lamp should blink and meter will indicate approximately the set point voltage indicated in the above table.

3. ADDITIONAL TEST:

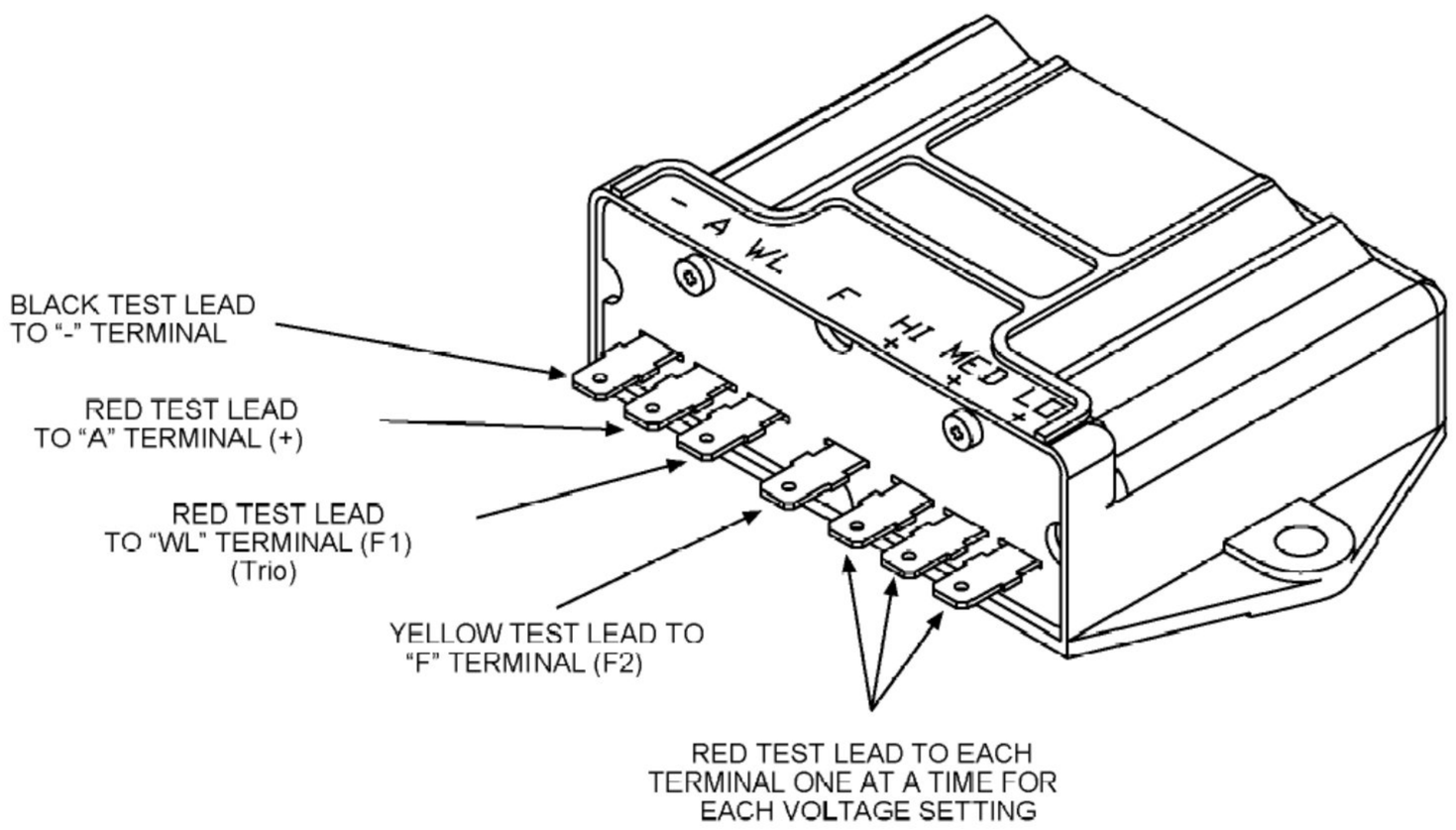

TRANSPO TESTER INSTRUCTIONS

for C.A.V. type regulators

PART NO.	FLD	VOLT	SET POINT	PART NO.	FLD	VOLT	SET POINT
CE533	**A**	**24**	**HI 28.8**				
CE533	**A**	**24**	**MID 27.8**				
CE533	**A**	**24**	**LO 26.7**				

1. POWER OFF: Set "Voltage Range" and "FLD" switches to desired setting. Connect the voltage regulator as indicated in the diagram below.

2. POWER ON: Field lamp should blink and meter will indicate approximately the set point voltage indicated in the above table.

3. ADDITIONAL TEST:

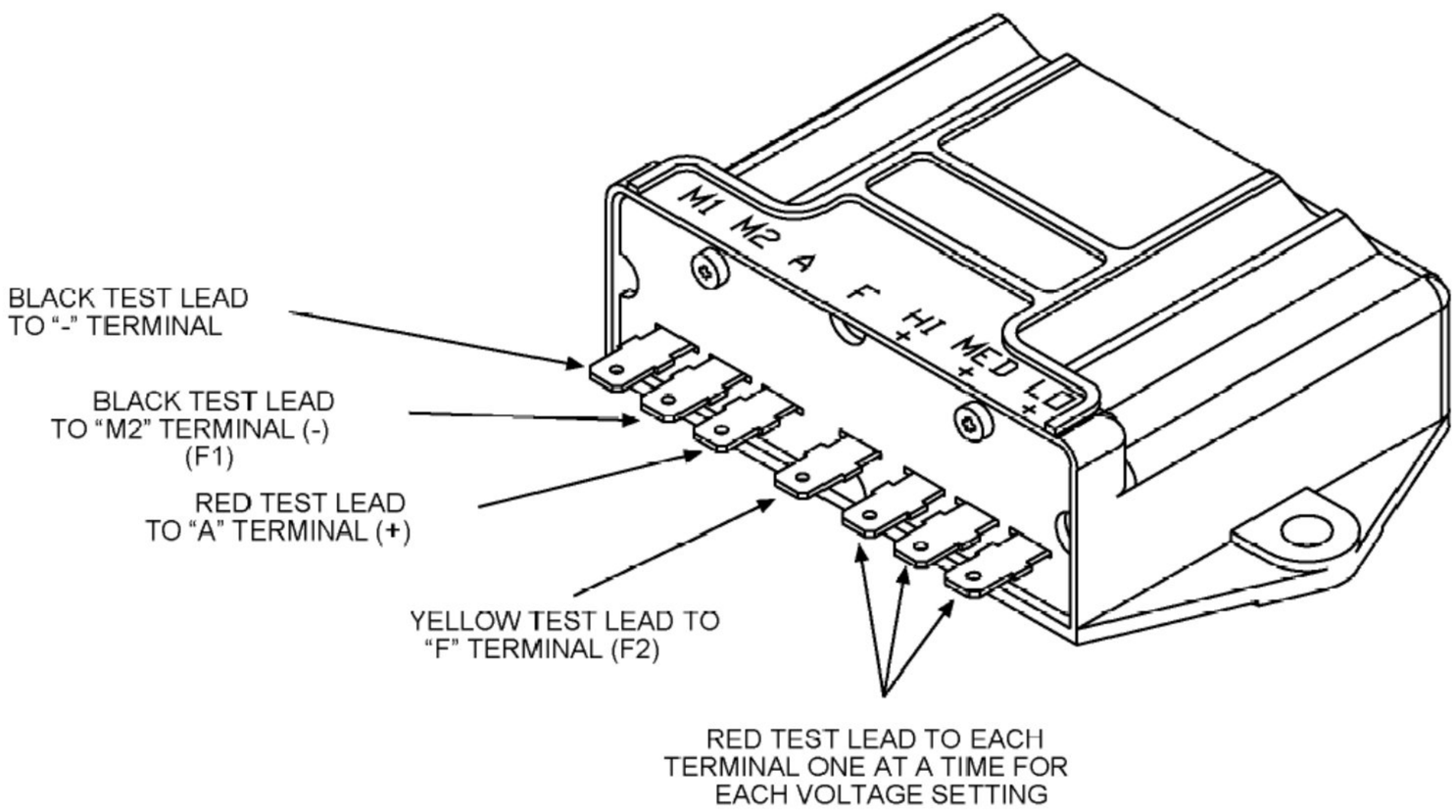

TRANSPO TESTER INSTRUCTIONS

for C.A.V. type regulators

PART NO.	FLD	VOLT	SET POINT	PART NO.	FLD	VOLT	SET POINT
CE301	**A**	**12**	**14.3**				

1. POWER OFF: Set "Voltage Range" and "FLD" switches to desired setting. Connect the voltage regulator as indicated in the diagram below.

2. POWER ON: Field lamp should blink and meter will indicate approximately the set point voltage indicated in the above table.

3. ADDITIONAL TEST:

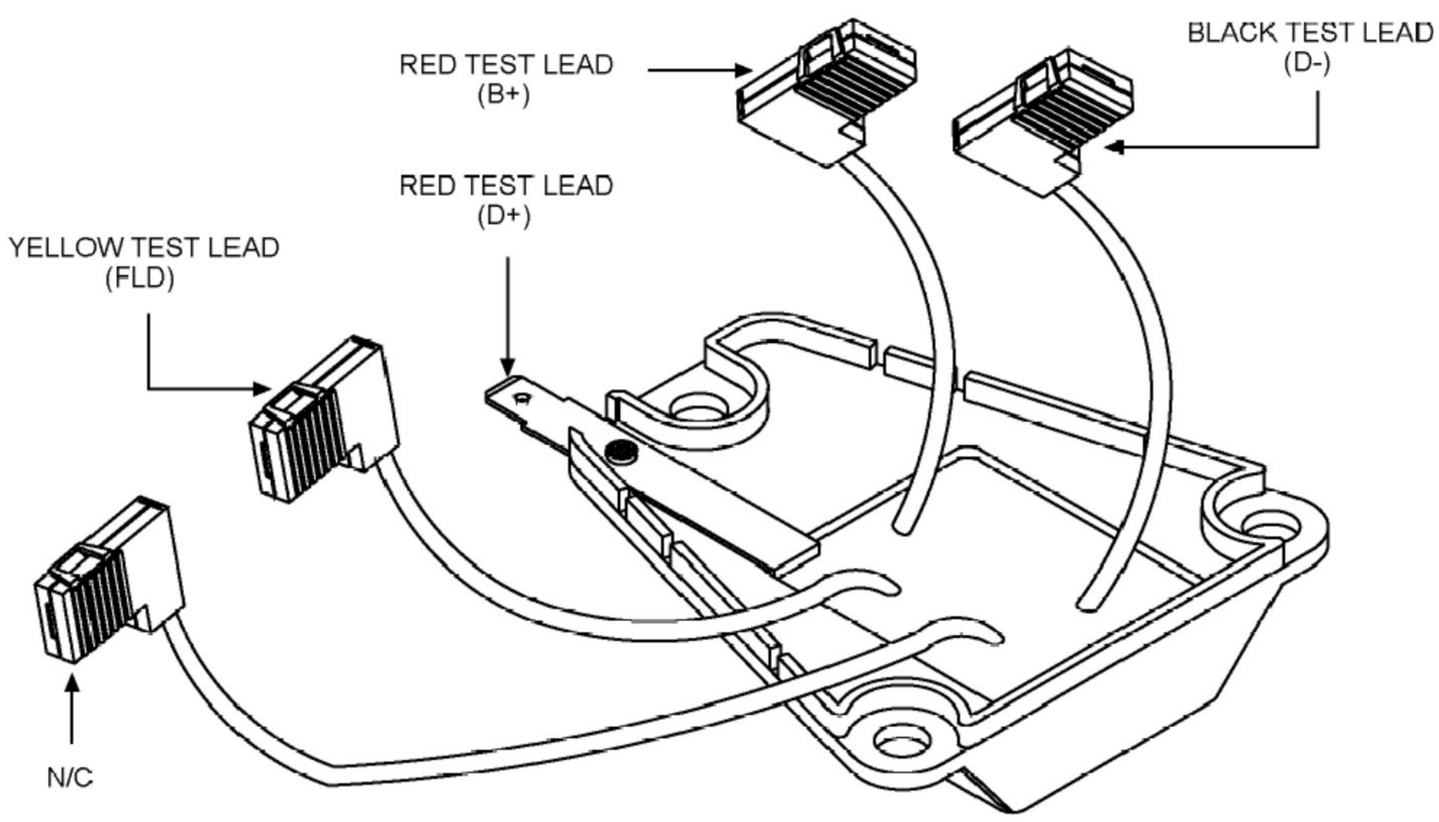

Black .....D-
Green .....DF
Yellow .....D+
Red .....B+

TRANSPO TESTER INSTRUCTIONS

for CHRYSLER type regulators

PART NO.	FLD	VOLT	SET POINT	PART NO.	FLD	VOLT	SET POINT
C8312	**A**	**12**	**14.3**	**C8315**	**A**	**12**	**14.2**
C8312C	**A**	**12**	**14.3**				
C8312HD	**A**	**12**	**14.2**				
C8313	**A**	**12**	**14.2**				

1. POWER OFF: Set "Voltage Range" and "FLD" switches to desired setting. Connect the voltage regulator as indicated in the diagram below.

2. POWER ON: Field lamp should blink and meter will indicate approximately the set point voltage indicated in the above table.

3. ADDITIONAL TEST: N/A

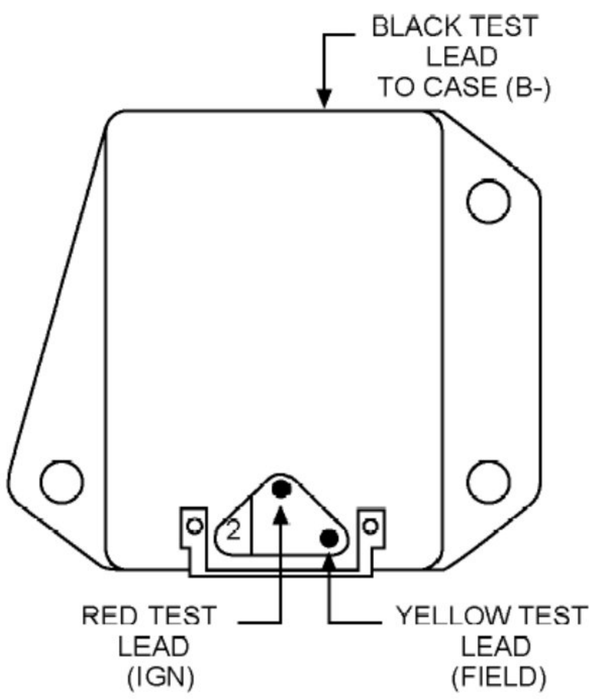

C8312 STYLE

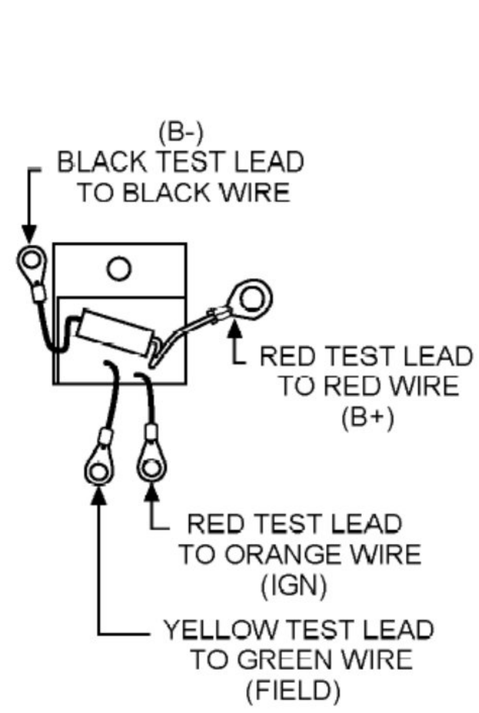

C8315

TRANSPO TESTER INSTRUCTIONS

for CHRYSLER type regulators

PART NO.	FLD	VOLT	SET POINT	PART NO.	FLD	VOLT	SET POINT
C8010	**B**	**12**	**14.3**				
C8012	**B**	**12**	**14.0**				

1. POWER OFF: Set "Voltage Range" and "FLD" switches to desired setting. Connect the voltage regulator as indicated in the diagram below.

2. POWER ON: Field lamp should blink and meter will indicate approximately the set point voltage indicated in the above table.

3. ADDITIONAL TEST: N/A

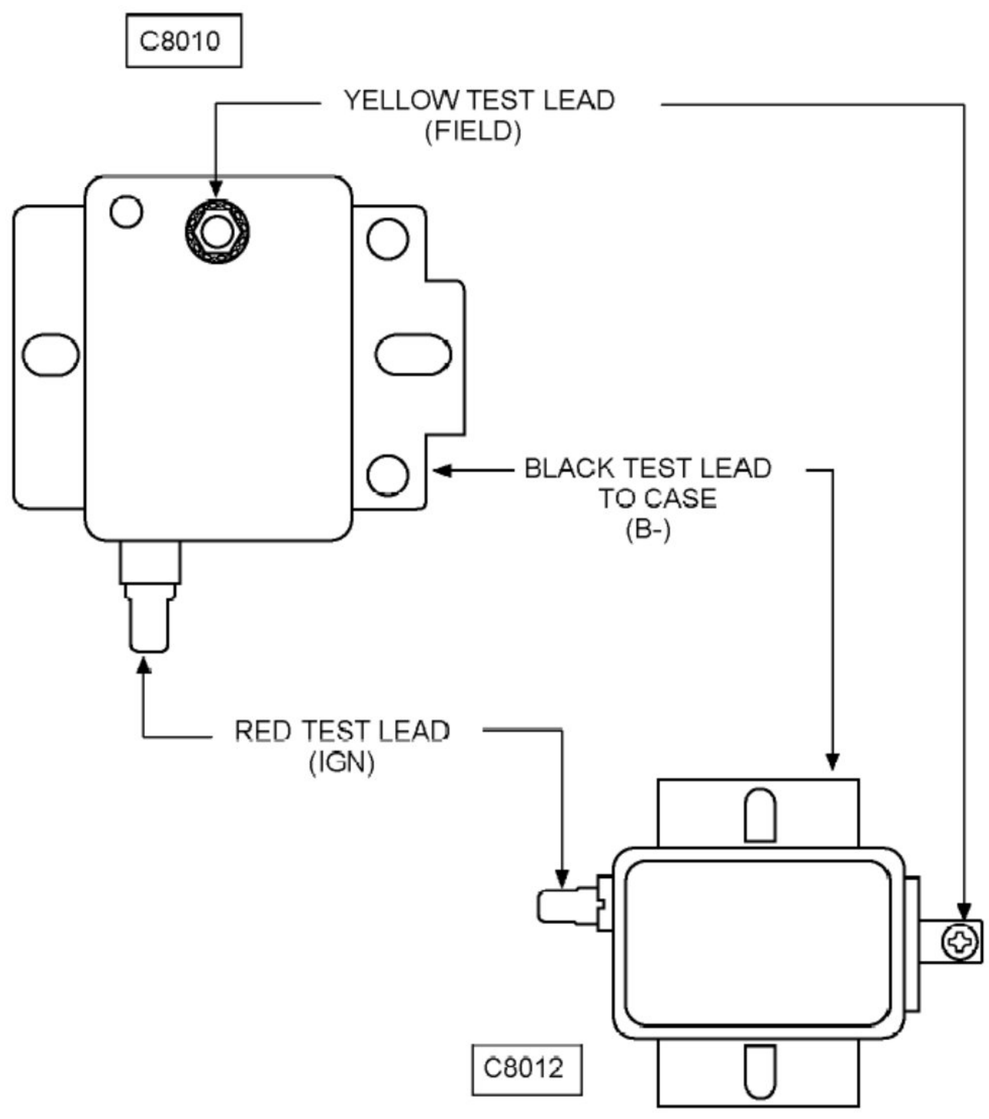

TRANSPO TESTER INSTRUCTIONS

for DAEWOO type regulators

PART NO.	FLD	VOLT	SET POINT	PART NO.	FLD	VOLT	SET POINT
D403	**A**	**12**	**14.7**				

1. POWER OFF: Set "Voltage Range" and "FLD" switches to desired setting. Connect the voltage regulator as indicated in the diagram below.

2. POWER ON: Field lamp should blink and meter will indicate approximately the set point voltage indicated in the above table.

3. ADDITIONAL TEST:

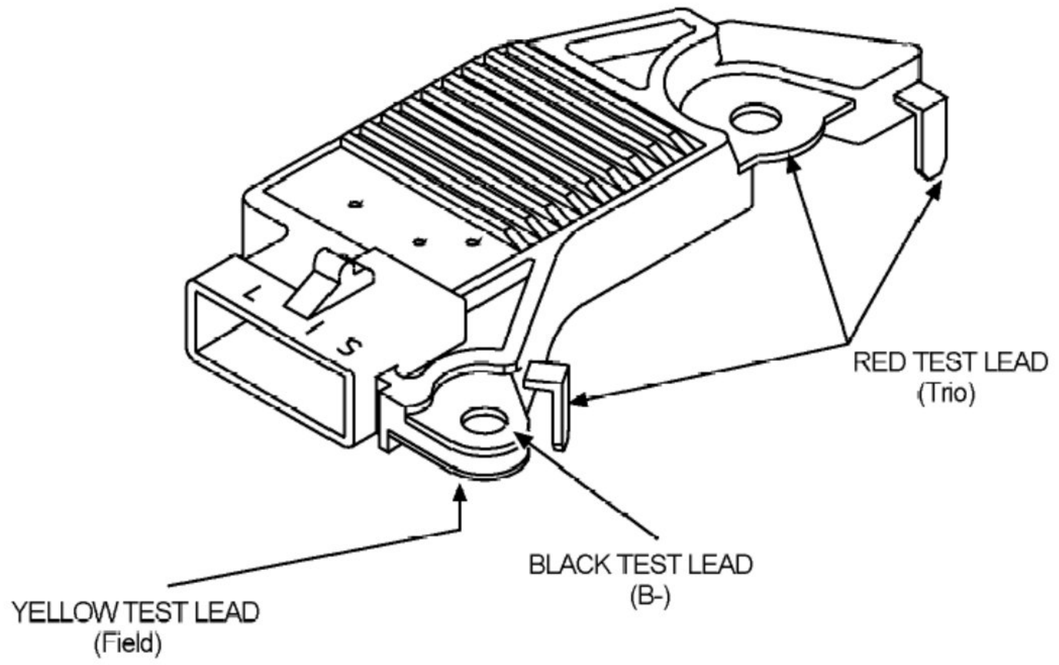

TRANSPO TESTER INSTRUCTIONS

for DELCO type regulators

PART NO.	FLD	VOLT	SET POINT	PART NO.	FLD	VOLT	SET POINT
D10	**A**	**12**	**14.8**	**D21**	**A**	**12**	**14.0**
D10SE8	**A**	**8**	**9.6**	**DE610**	**A**	**12**	**14.7**
D10SE24	**A**	**24**	**27.5**	**D30**	**A**	**24**	**27.5**
DE608	**A**	**12**	**14.7**	**D104D**	**A**	**24**	**27.5**

1. POWER OFF: Set "Voltage Range" and "FLD" switches to desired setting. Connect the voltage regulator as indicated in the diagram below.

2. POWER ON: Field lamp should blink and meter will indicate approximately the set point voltage indicated in the above table.

3. ADDITIONAL TEST:

NOTE : Transpo's standard voltage regulator tester offers 12, 24, and 32 volts. However, we also offer testers with additional 6 and 8 volts ranges.

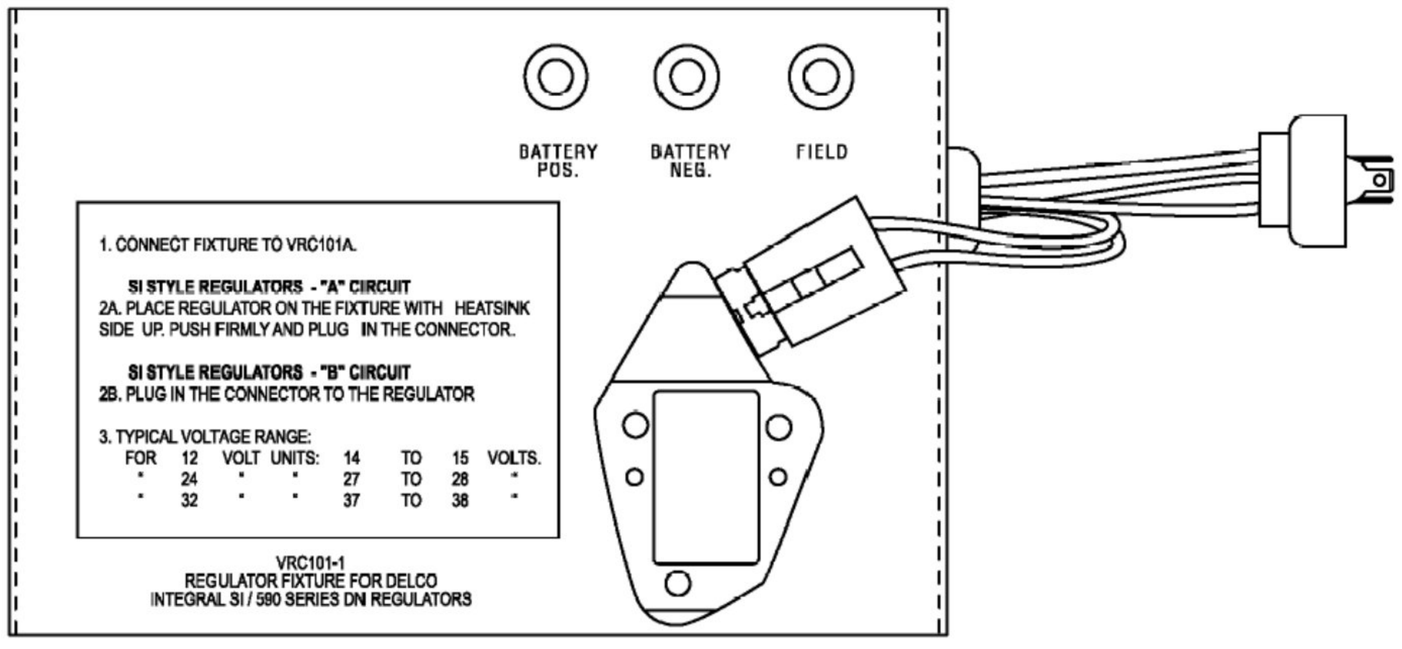

TRANSPO TESTER INSTRUCTIONS

for DELCO type regulators

PART NO.	FLD	VOLT	SET POINT	PART NO.	FLD	VOLT	SET POINT
D32S	**A**	**32**	**37.5**	**D105HD**	**A**	**12**	**14.8**
D10SE6	**A**	**6**	**7.7**	**D10SE12**	**A**	**12**	**14.8**
D105	**A**	**12**	**14.8**	**D101**	**A**	**12**	**14.8**
D105D	**A**	**12**	**14.8**	**D101D**	**A**	**12**	**14.8**

1. POWER OFF: Set "Voltage Range" and "FLD" switches to desired setting. Connect the voltage regulator as indicated in the diagram below.

2. POWER ON: Field lamp should blink and meter will indicate approximately the set point voltage indicated in the above table.

3. ADDITIONAL TEST:

NOTE: Transpo's standard voltage regulator tester offers 12, 24, and 32 volts. However, we also offer testers with additional 6 and 8 volts ranges.

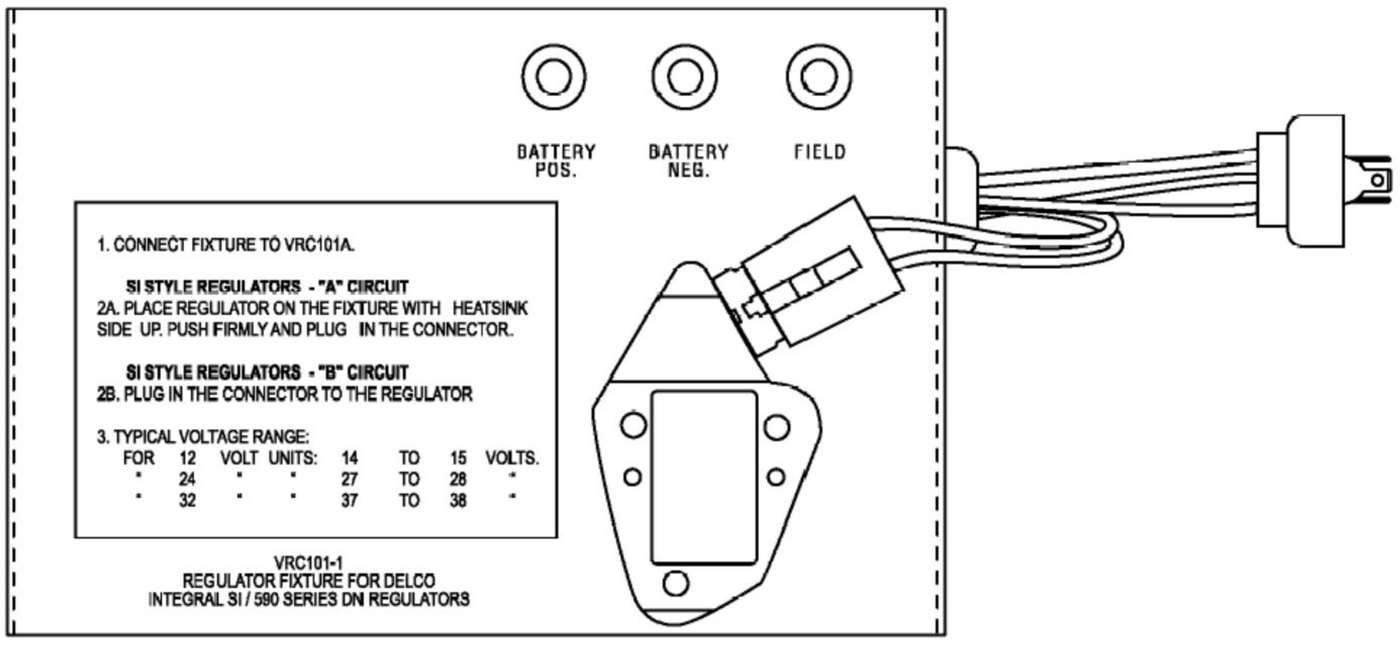

TRANSPO TESTER INSTRUCTIONS

for DELCO type regulators

PART NO.	FLD	VOLT	SET POINT	PART NO.	FLD	VOLT	SET POINT
D101HD	**A**	**12**	**14.8**	**D30S**	**A**	**24**	**27.5**
D17SE	**A**	**12**	**14.2**	**D27S**	**A**	**12**	**14.0**
D27	**A**	**12**	**13.7**	**D27HD**	**A**	**12**	**14.0**
D102HD	**A**	**12**	**13.7**				

1. POWER OFF: Set "Voltage Range" and "FLD" switches to desired setting. Connect the voltage regulator as indicated in the diagram below.

2. POWER ON: Field lamp should blink and meter will indicate approximately the set point voltage indicated in the above table.

3. ADDITIONAL TEST:

NOTE: Transpo's standard voltage regulator tester offers 12, 24, and 32 volts. However, we offer testers with additional 6 and 8 volts ranges.

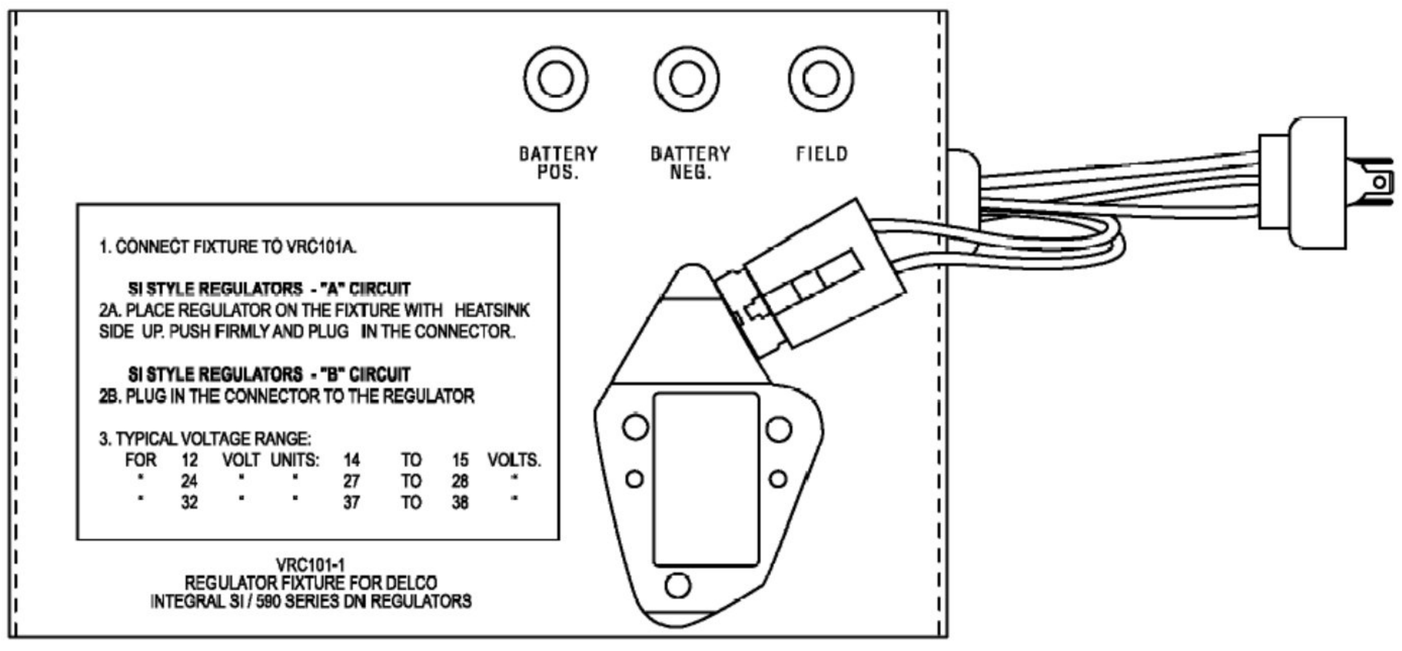

TRANSPO TESTER INSTRUCTIONS

for DELCO type regulators

PART NO.	FLD	VOLT	SET POINT	PART NO.	FLD	VOLT	SET POINT
D10DN24	**B**	**24**	**27.5**				
D10DN24L	**B**	**24**	**27.5**				

1. POWER OFF: Set "Voltage Range" and "FLD" switches to desired setting. Connect the voltage regulator as indicated in the diagram below.

2. POWER ON: Field lamp should blink and meter will indicate approximately the set point voltage indicated in the above table.

3. ADDITIONAL TEST: On D10DN24L, remove red test lead from the yellow wire (STA) of the regulator. The indicator light should turn on and the meter will indicated approximately 24V.

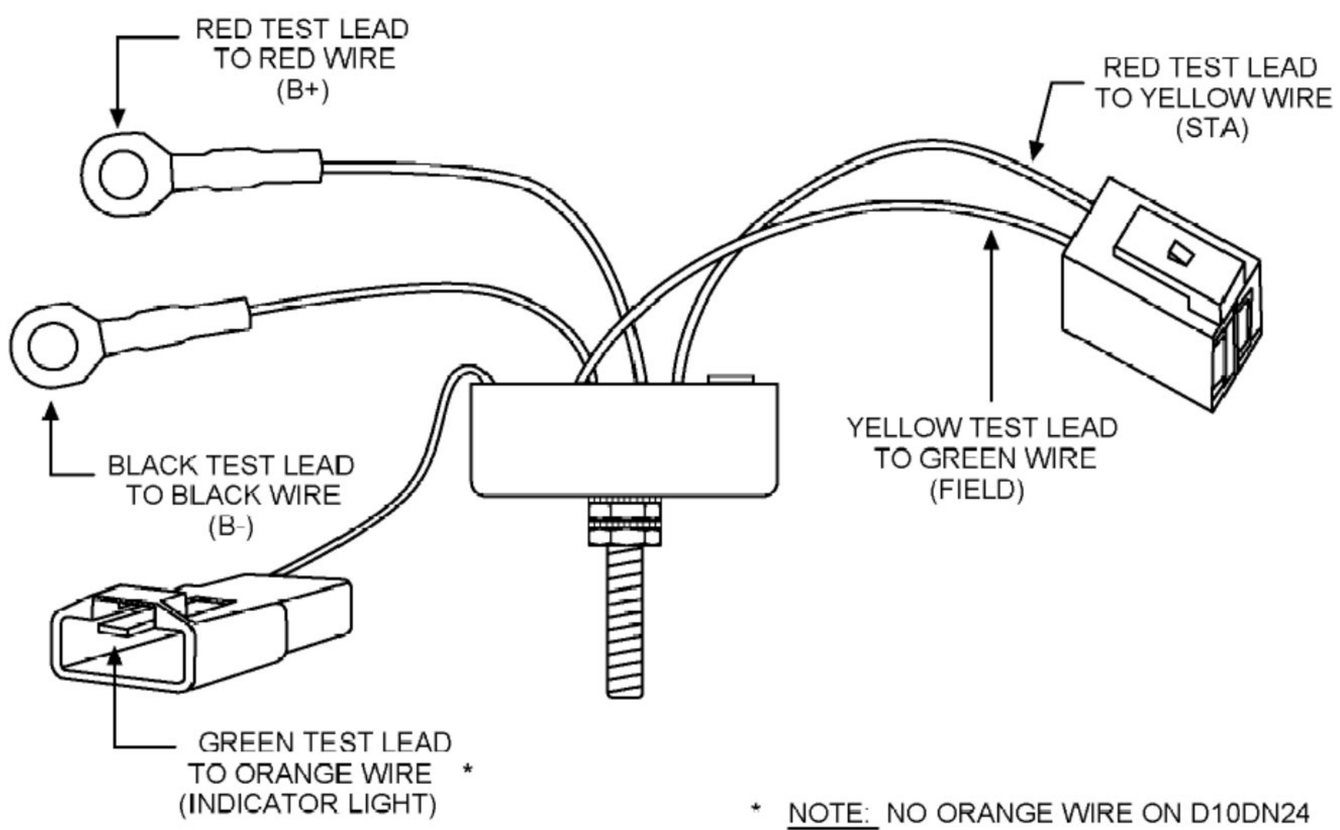

* NOTE: NO ORANGE WIRE ON D10DN24

TRANSPO TESTER INSTRUCTIONS

for DELCO type regulators

PART NO.	FLD	VOLT	SET POINT	PART NO.	FLD	VOLT	SET POINT
DE604	**A**	**12**	**14.8**				
DE605	**A**	**12**	**14.8**				
DE609	**A**	**12**	**14.8**				

1. POWER OFF: Set "Voltage Range" and "FLD" switches to desired setting. Connect the voltage regulator as indicated in the diagram below.

2. POWER ON: Field lamp should blink and meter will indicate approximately the set point voltage indicated in the above table.

3. ADDITIONAL TEST:

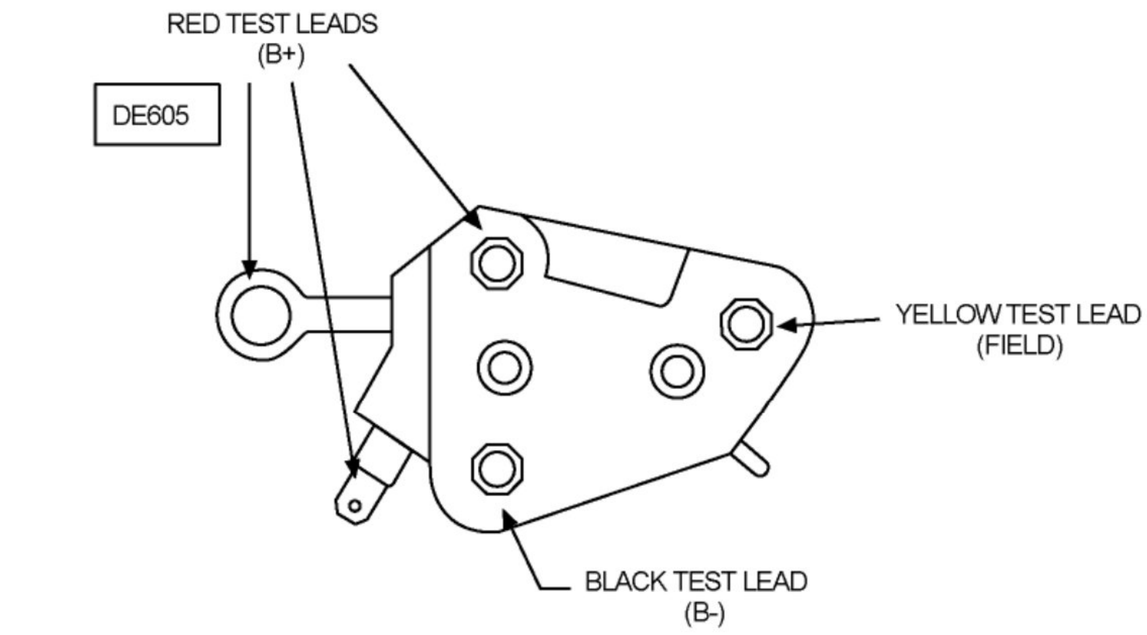

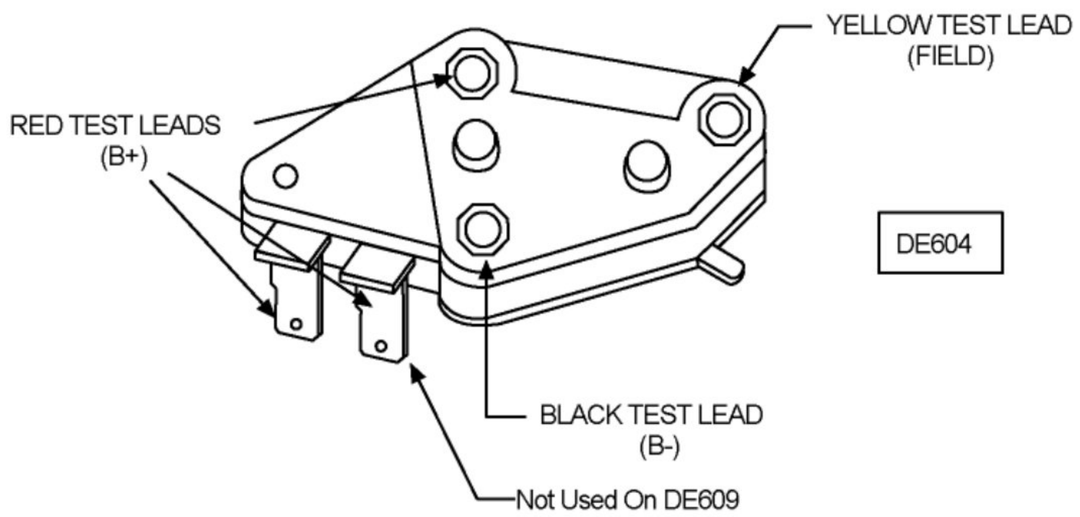

TRANSPO TESTER INSTRUCTIONS

for DELCO type regulators

PART NO.	FLD	VOLT	SET POINT	PART NO.	FLD	VOLT	SET POINT
D9212	**B**	**12**	**14.2**	**D6378**	**B**	**12**	**14.6**
D9212S	**B**	**12**	**14.2**	**D6377**	**B**	**12**	**14.6**
D9212C	**B**	**12**	**14.2**	**D518**	**B**	**24**	**27.5**
D6374	**B**	**12**	**14.6**				

1. POWER OFF: Set "Voltage Range" and "FLD" switches to desired setting. Connect the voltage regulator as indicated in the diagram below.

2. POWER ON: Field lamp should blink and meter will indicate approximately the set point voltage indicated in the above table.

3. ADDITIONAL TEST: On all above parts numbers except D6377, disconnect red test lead from the terminal marked with "S" Indicator light should turn on and the meter will indicate set point voltage.

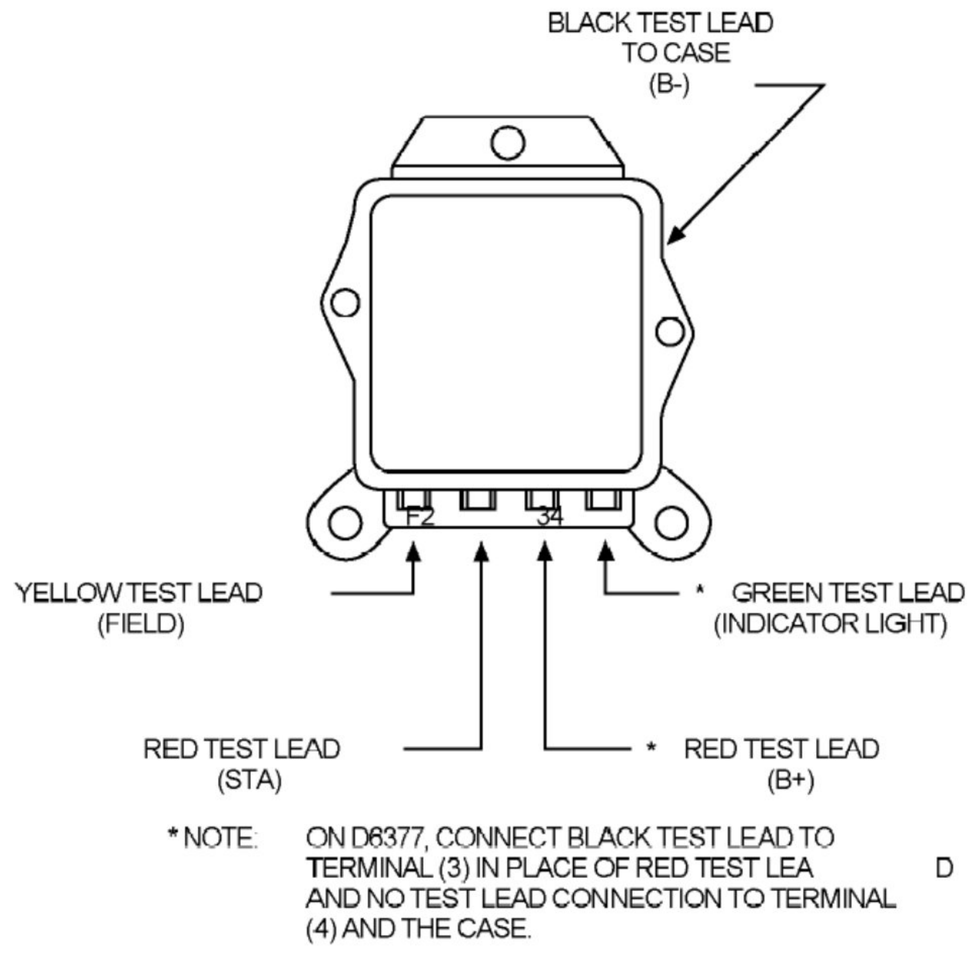

* NOTE: ON D6377, CONNECT BLACK TEST LEAD TO TERMINAL (3) IN PLACE OF RED TEST LEA D AND NO TEST LEAD CONNECTION TO TERMINAL (4) AND THE CASE.

TRANSPO TESTER INSTRUCTIONS

for DELCO type regulators

PART NO.	FLD	VOLT	SET POINT	PART NO.	FLD	VOLT	SET POINT
D443	**B**	**12**	**14.2**				
D447	**B**	**24**	**27.5**				
D551	**B**	**12**	**14.2**				
D597	**B**	**24**	**27.5**				

1. POWER OFF: Set "Voltage Range" and "FLD" switches to desired setting. Connect the voltage regulator as indicated in the diagram below.

2. POWER ON: Field lamp should blink and meter will indicate approximately the set point voltage indicated in the above table.

3. ADDITIONAL TEST:

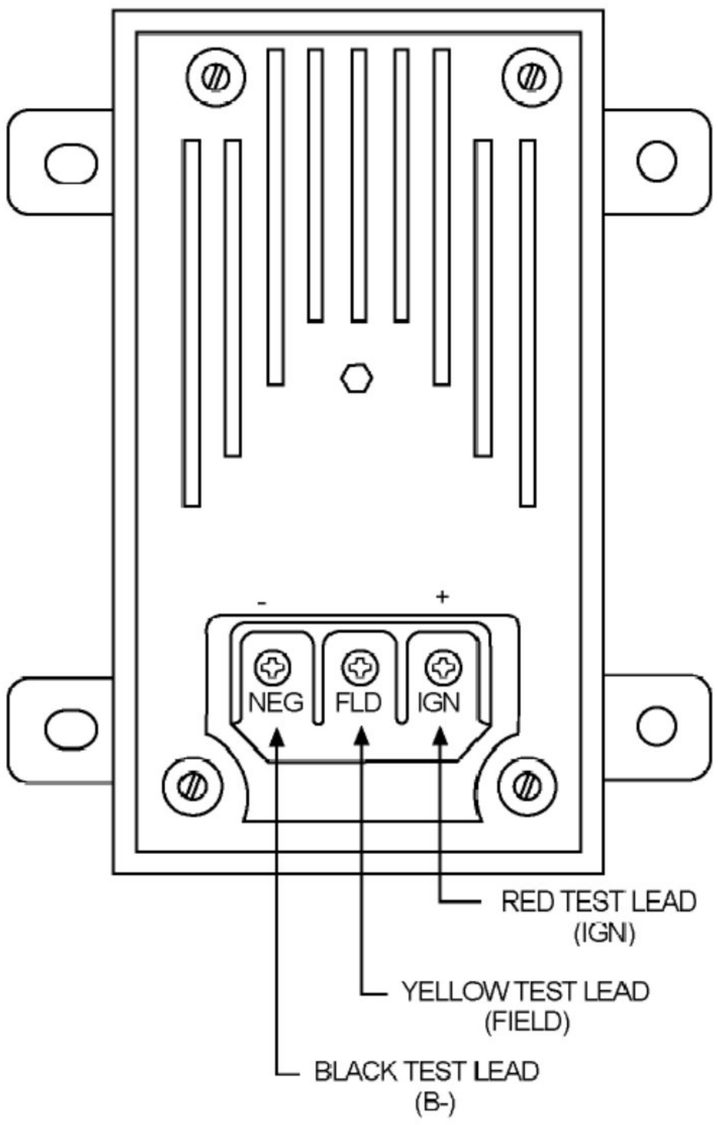

TRANSPO TESTER INSTRUCTIONS

for DELCO type regulators

PART NO.	FLD	VOLT	SET POINT	PART NO.	FLD	VOLT	SET POINT
D551P	**B**	**12**	**14.2**				
D597P	**B**	**24**	**27.5**				

1. POWER OFF: Set "Voltage Range" and "FLD" switches to desired setting. Connect the voltage regulator as indicated in the diagram below.

2. POWER ON: Field lamp should blink and meter will indicate approximately the set point voltage indicated in the above table.

3. ADDITIONAL TEST:

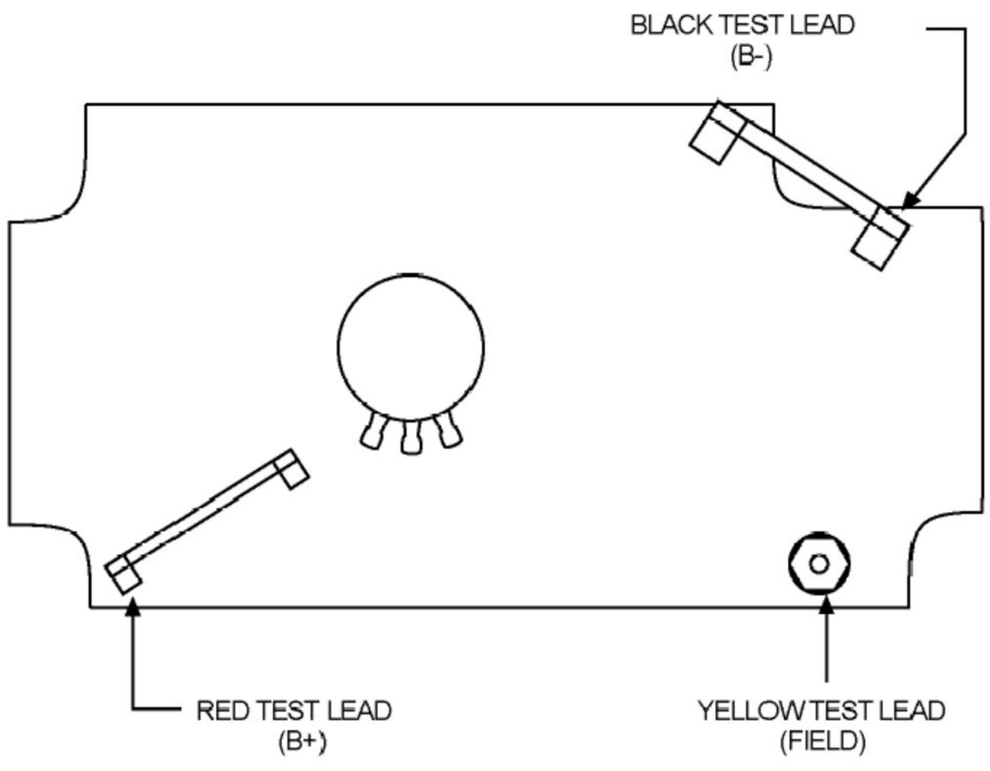

BACK VIEW

TRANSPO TESTER INSTRUCTIONS

for DELCO type regulators

PART NO.	FLD	VOLT	SET POINT	PART NO.	FLD	VOLT	SET POINT
D443P	**B**	**12**	**14.2**				
D447P	**B**	**24**	**27.5**				

1. POWER OFF: Set "Voltage Range" and "FLD" switches to desired setting. Connect the voltage regulator as indicated in the diagram below.

2. POWER ON: Field lamp should blink and meter will indicate approximately the set point voltage indicated in the above table.

3. ADDITIONAL TEST:

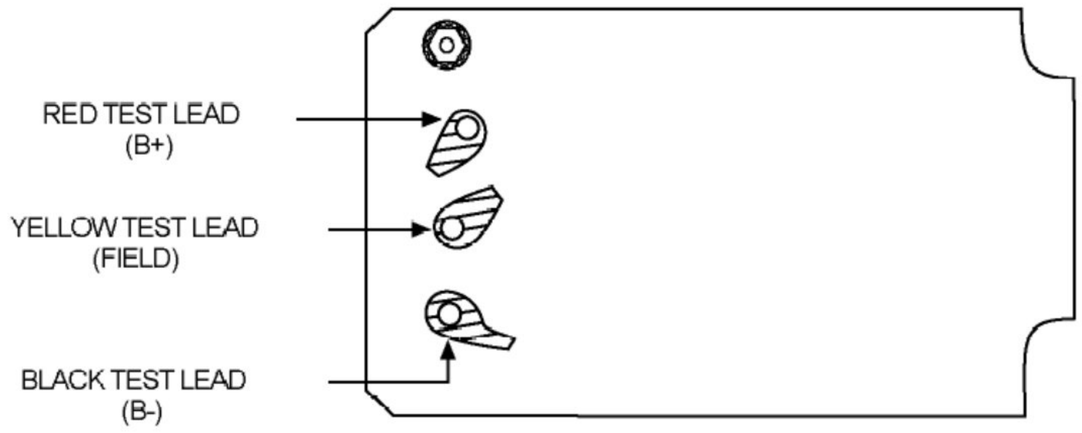

BACK VIEW

TRANSPO TESTER INSTRUCTIONS

for DELCO type regulators

PART NO.	FLD	VOLT	SET POINT	PART NO.	FLD	VOLT	SET POINT
D437P	**A**	**24**	**27.5**				
D559P	**A**	**12**	**12.2**				

1. POWER OFF: Set "Voltage Range" and "FLD" switches to desired setting. Connect the voltage regulator as indicated in the diagram below.

2. POWER ON: Field lamp should blink and meter will indicate approximately the set point voltage indicated in the above table.

3. ADDITIONAL TEST:

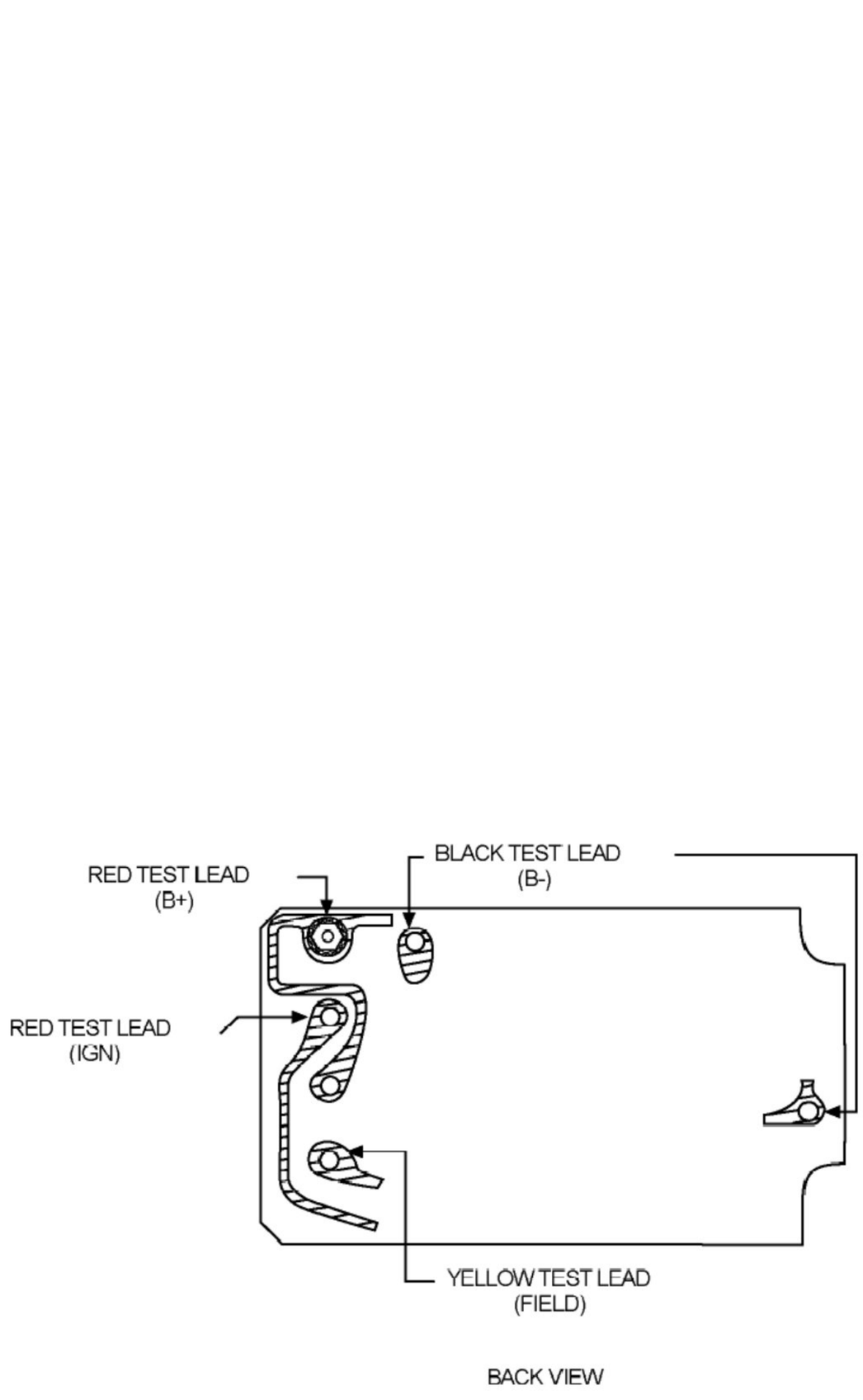

BACK VIEW

TRANSPO TESTER INSTRUCTIONS

for DELCO type regulators

PART NO.	FLD	VOLT	SET POINT	PART NO.	FLD	VOLT	SET POINT
D437	**A**	**24**	**27.5**				
D559	**A**	**12**	**14.2**				

1. POWER OFF: Set "Voltage Range" and "FLD" switches to desired setting. Connect the voltage regulator as indicated in the diagram below.

2. POWER ON: Field lamp should blink and meter will indicate approximately the set point voltage indicated in the above table.

3. ADDITIONAL TEST: Remove red test lead from terminal marked with (*) . Field lamp should turn off and the meter will indicate low voltage.

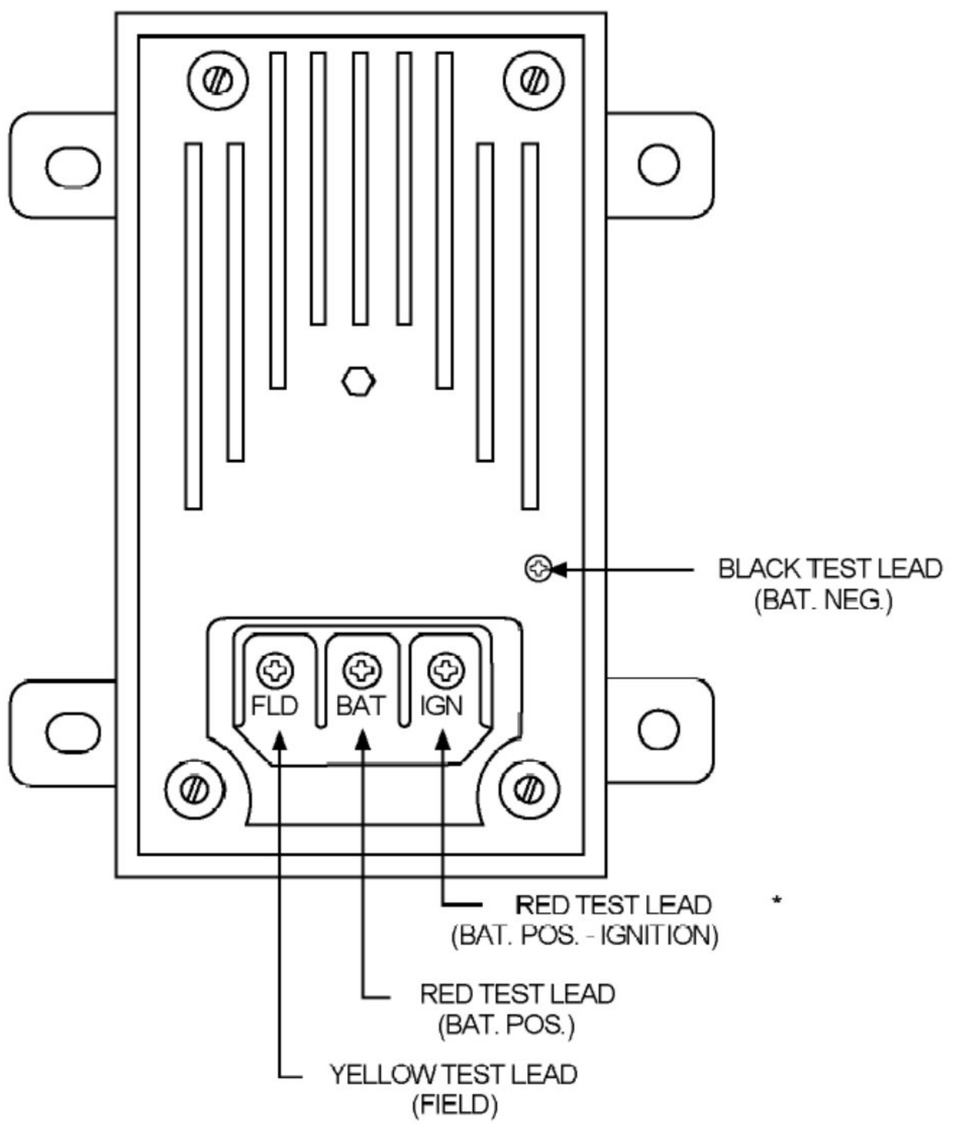

TRANSPO TESTER INSTRUCTIONS

for DELCO type regulators

PART NO.	FLD	VOLT	SET POINT	PART NO.	FLD	VOLT	SET POINT
D875	**B**	**24**	**27.5**				
D876	**B**	**12**	**14.2**				

1. POWER OFF: Set "Voltage Range" and "FLD" switches to desired setting. Connect the voltage regulator as indicated in the diagram below.

2. POWER ON: Field lamp should blink and meter will indicate approximately the set point voltage indicated in the above table.

3. ADDITIONAL TEST:

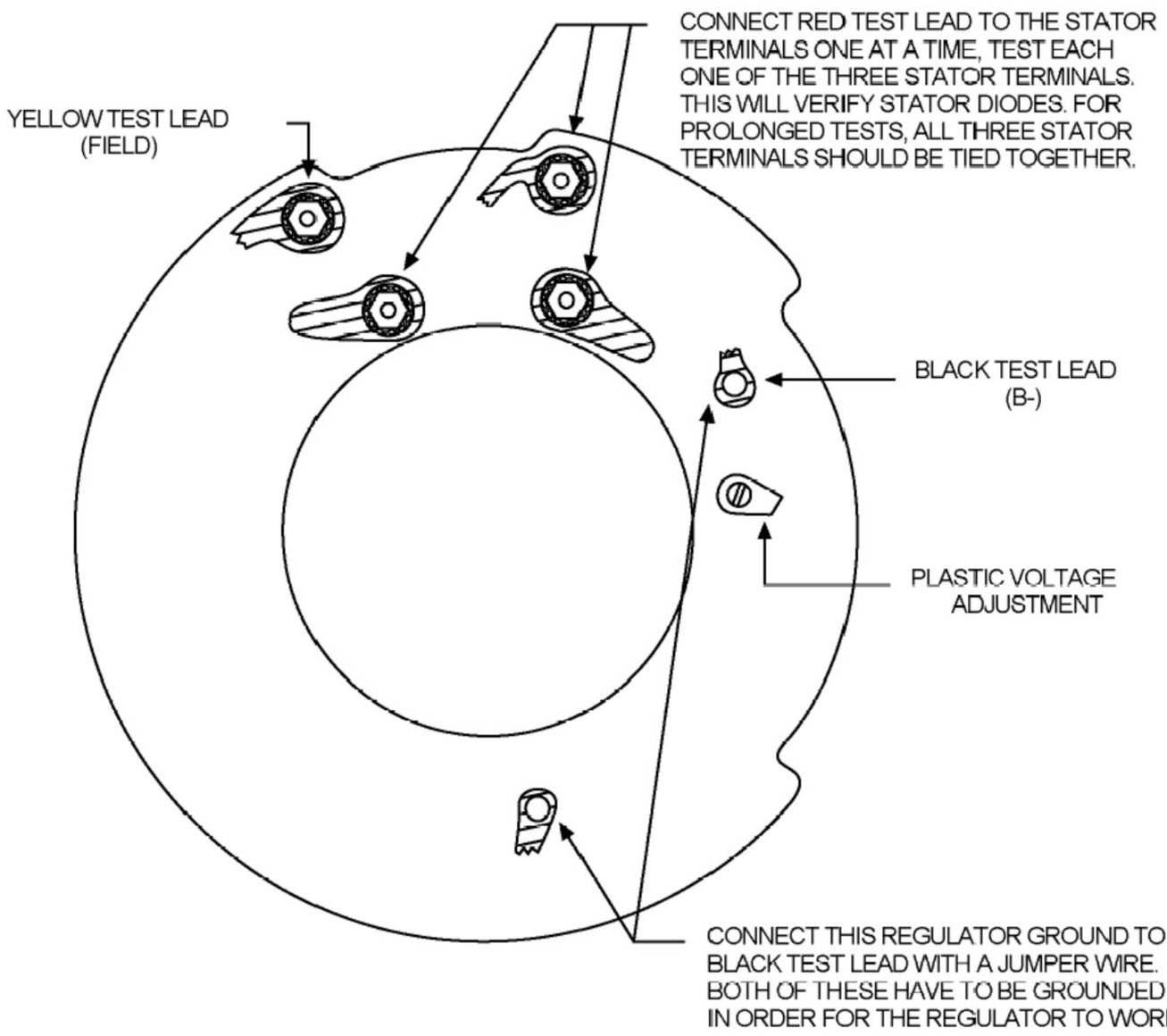

TRANSPO TESTER INSTRUCTIONS

for DELCO type regulators

PART NO.	FLD	VOLT	SET POINT	PART NO.	FLD	VOLT	SET POINT
D408	**B**	**12**	**14.7**	**D436**	**B**	**12**	**14.7**
D428	**B**	**12**	**14.7**	***D440G**	**B**	**12**	**14.7**
D411	**B**	**12**	**14.7**				
D429	**B**	**12**	**14.7**				

1. POWER OFF: Set "Voltage Range" and "FLD" switches to desired setting. Connect the voltage regulator as indicated in the diagram below.

2. POWER ON: Field lamp should blink and meter will indicate approximately the set point voltage indicated in the above table.

3. ADDITIONAL TEST: Remove white test lead from terminal marked "STATOR". The indicator light will turn on, field lamp will stay on and meter will indicate approximately 12V. Disconnect the test lead from "L" terminal. Regulator will turn off and the meter will indicate 12V. On "I" type voltage regulators, connect the regulators as per diagram below except do not connect the indicator light to the "L" terminal. Connect red test lead to the terminal marked "I/F" and same results as step number 2 should be noticed.

Using VRC1000: To check for over Voltage, push the “Over Voltage” switch and the “Lamp Indicator” will turn on between 16.0V and 17.1V. Push the choke drive and the “Choke Drive Indicator Lamp” will turn on, if present.

NOTE: On D412 regulator , an 1800 OHM pull-up resistor is required between "S" terminal of regulator and the testers battery POS.
NOTE: On D440 regulator, both of the "L" and "I" terminals must be connected in order to conduct the test.

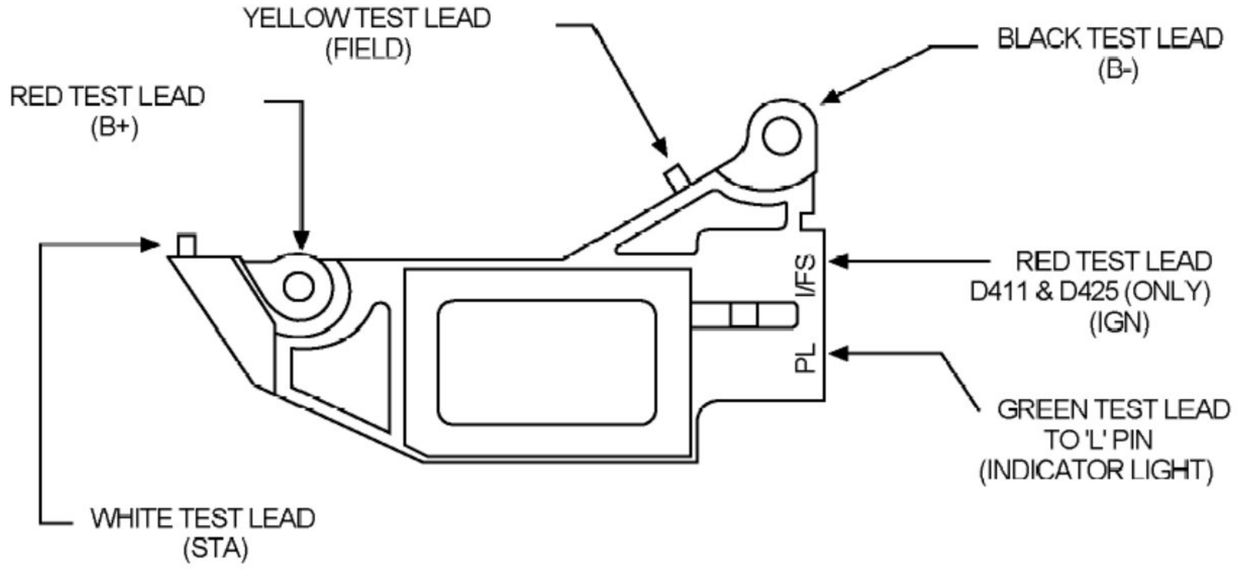

TRANSPO TESTER INSTRUCTIONS

for DELCO type regulators

PART NO.	FLD	VOLT	SET POINT	PART NO.	FLD	VOLT	SET POINT
D412	**B**	**12**	**14.2**	**D446**	**B**	**12**	**14.6**
D413	**B**	**12**	**14.7**	**D411SE**	**B**	**12**	**14.7**
***D440**	**B**	**12**	**14.7**				
D425	**B**	**12**	**14.2**				

1. POWER OFF: Set "Voltage Range" and "FLD" switches to desired setting. Connect the voltage regulator as indicated in the diagram below.

2. POWER ON: Field lamp should blink and meter will indicate approximately the set point voltage indicated in the above table.

3. ADDITIONAL TEST: Remove white test lead from terminal marked "STATOR". The indicator light will turn on, field lamp will stay on and meter will indicate approximately 12V. Disconnect the test lead from "L" terminal. Regulator will turn off and the meter will indicate 12V. On "I" type voltage regulators, connect the regulators as per diagram below except do not connect the indicator light to the "L" terminal. Connect red test lead to the terminal marked "I/F" and same results as step number 2 should be noticed.

Using VRC1000: To check for over Voltage, push the “Over Voltage” switch and the “Lamp Indicator” will turn on between 16.0V and 17.1V. Push the choke drive and the “Choke Drive Indicator Lamp” will turn on, if present.

NOTE: On D412 regulator , an 1800 OHM pull-up resistor is required between "S" terminal of regulator and the testers battery POS.
NOTE: On D440 regulator, both of the "L" and "I" terminals must be connected in order to conduct the test.

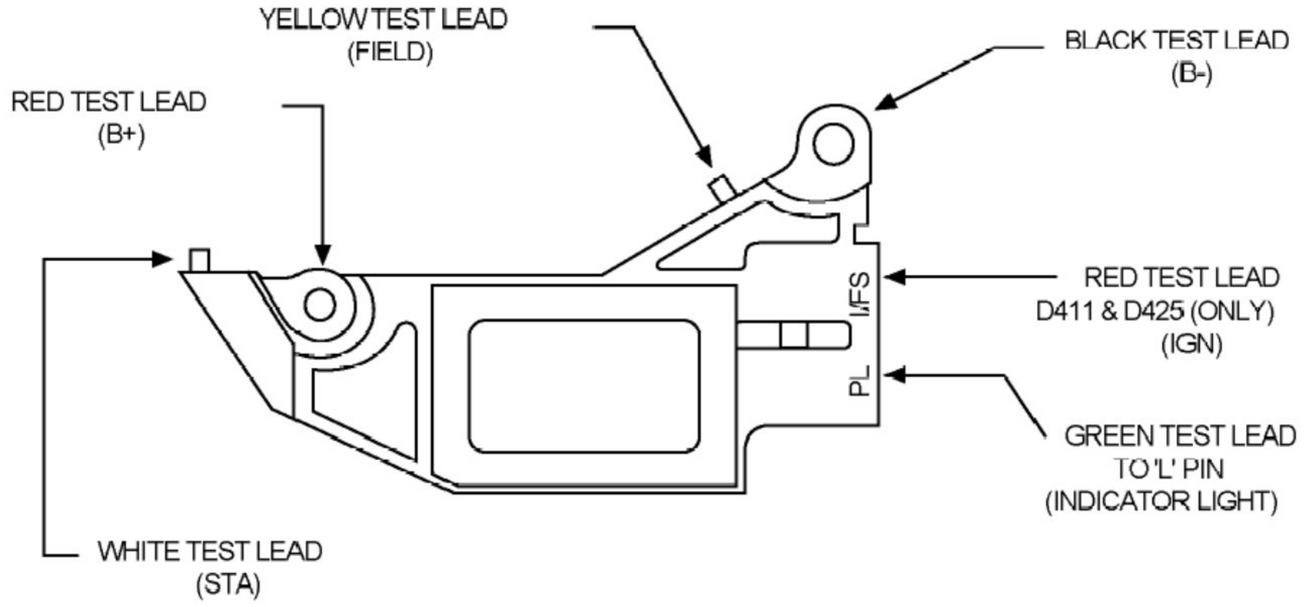

TRANSPO TESTER INSTRUCTIONS

for DELCO type regulators

PART NO.	FLD	VOLT	SET POINT	PART NO.	FLD	VOLT	SET POINT
D812AC	**A**	**12**	**14.2**				
D817AC	**A**	**12**	**14.2**				
D824AC	**A**	**24**	**27.5**				

1. POWER OFF: Set "Voltage Range" and "FLD" switches to desired setting. Connect the voltage regulator as indicated in the diagram below.

2. POWER ON: Field lamp should blink and meter will indicate approximately the set point voltage indicated in the above table.

3. ADDITIONAL TEST: Remove white test lead from the regulator's yellow wire. Field lamp should turn off and the meter will indicate low voltage. Also, connection the red test lead to "NO CONNECTION" terminal instead of regulator's red wire will result in the same test data.

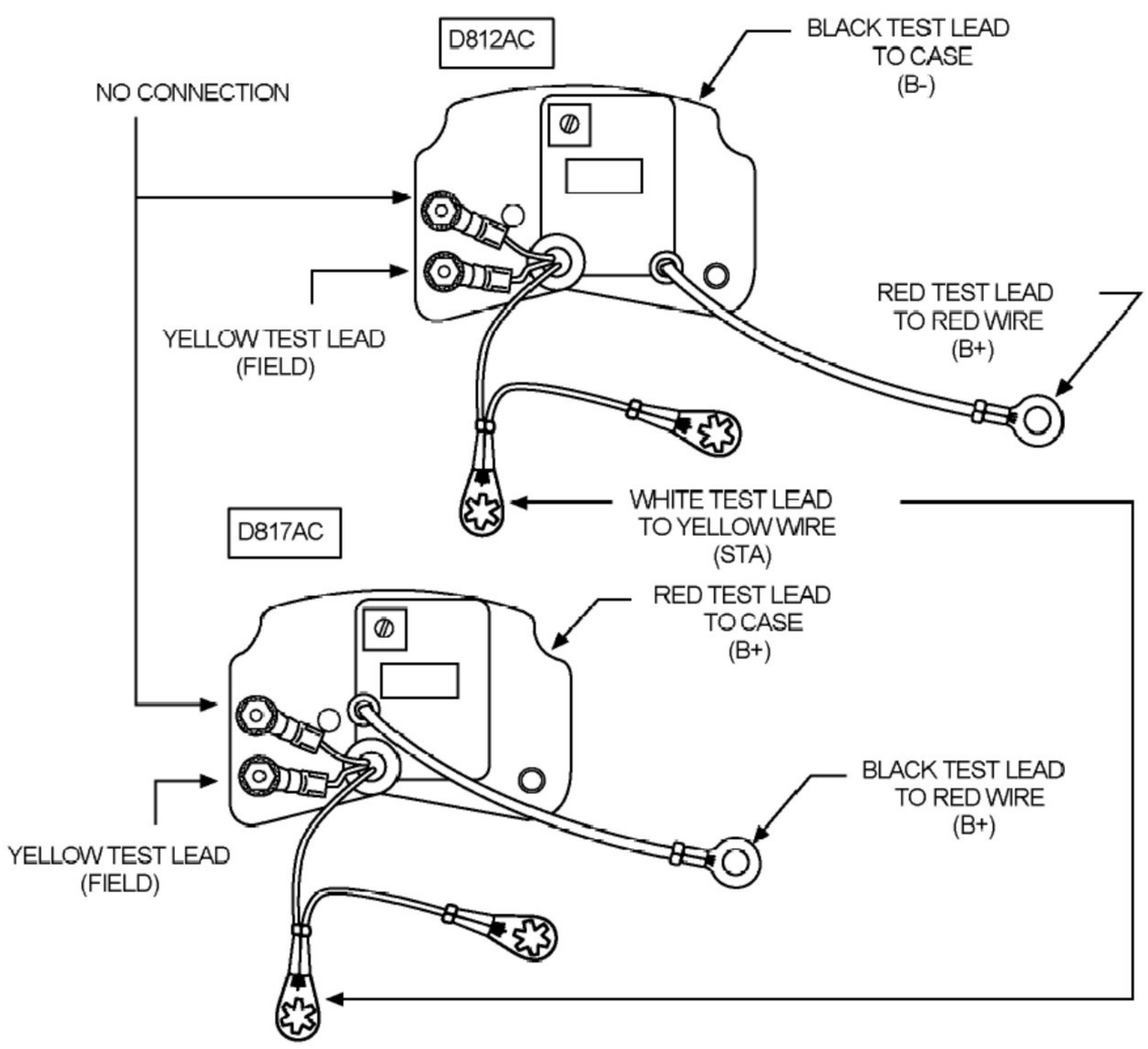

TRANSPO TESTER INSTRUCTIONS

for DELCO type regulators

PART NO.	FLD	VOLT	SET POINT	PART NO.	FLD	VOLT	SET POINT
D710	**B**	**6**	**7.8**				
D713	**B**	**12**	**14.2**				
D173L	**B**	**12**	**14.2**				

1. POWER OFF: Set "Voltage Range" and "FLD" switches to desired setting. Connect the voltage regulator as indicated in the diagram below.

2. POWER ON: Field lamp should blink and meter will indicate approximately the set point voltage indicated in the above table.

3. ADDITIONAL TEST: Remove white test lead from terminal marked "stator". Field lamp should turn off and the meter will indicate low voltage. On D713L regulator, removal of white test leads will also cause indicator light to turn on.

NOTE: Transpo's standard voltage regulator testers offers 12, 24, and 32 volts. However, we also offer testers with additional 6 and 8 volt ranges.

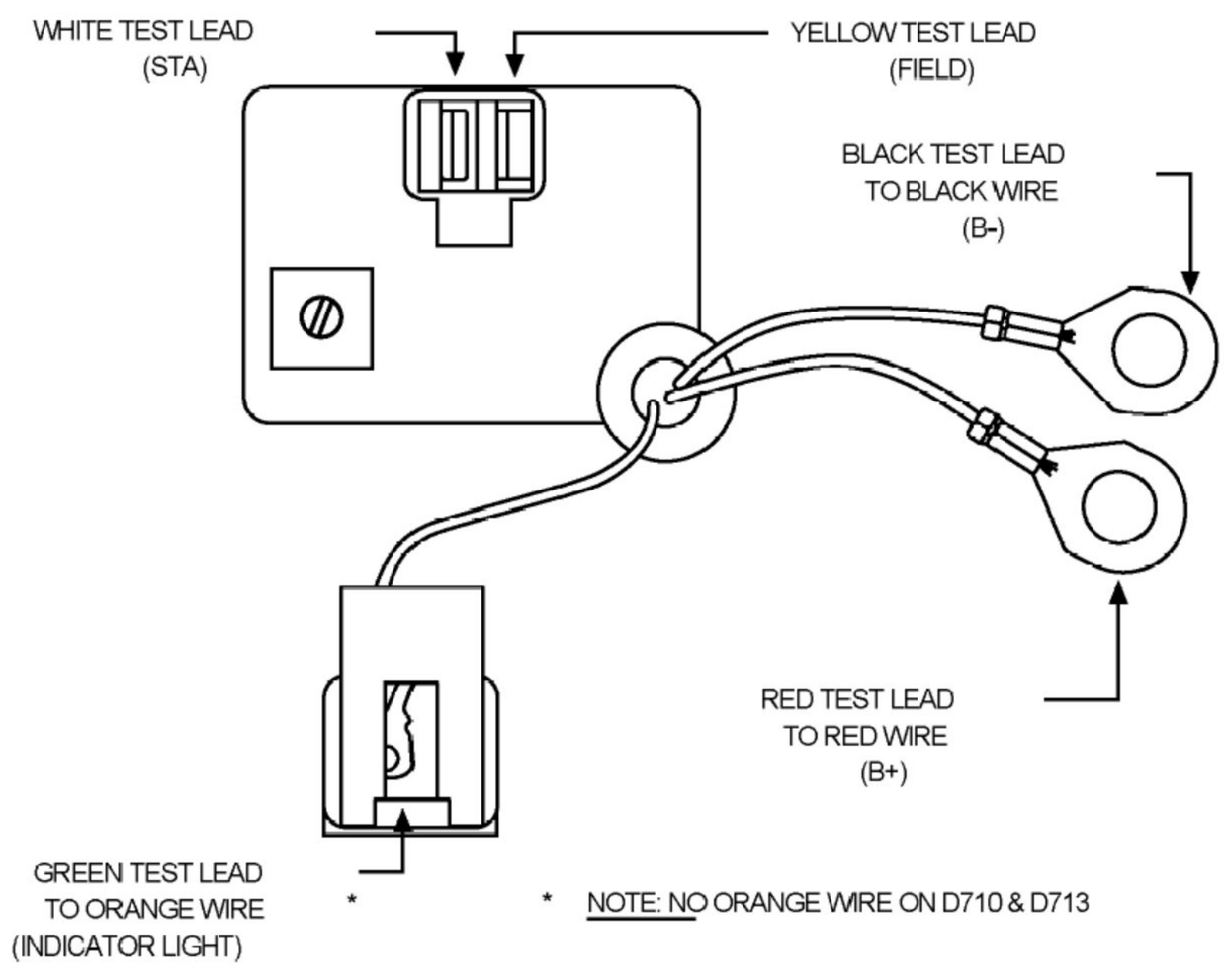

TRANSPO TESTER INSTRUCTIONS

for DELCO type regulators

PART NO.	FLD	VOLT	SET POINT	PART NO.	FLD	VOLT	SET POINT
D590M	**B**	**12**	**14.2**	**D591S**	**B**	**24**	**27.5**
D591M	**B**	**24**	**27.5**	**D593S**	**B**	**32**	**37.5**
D593M	**B**	**32**	**37.5**				
D590S	**B**	**12**	**14.2**				

1. POWER OFF: Set "Voltage Range" and "FLD" switches to desired setting. Connect the voltage regulator as indicated in the diagram below.

2. POWER ON: Field lamp should blink and meter will indicate approximately the set point voltage indicated in the above table.

3. ADDITIONAL TEST:

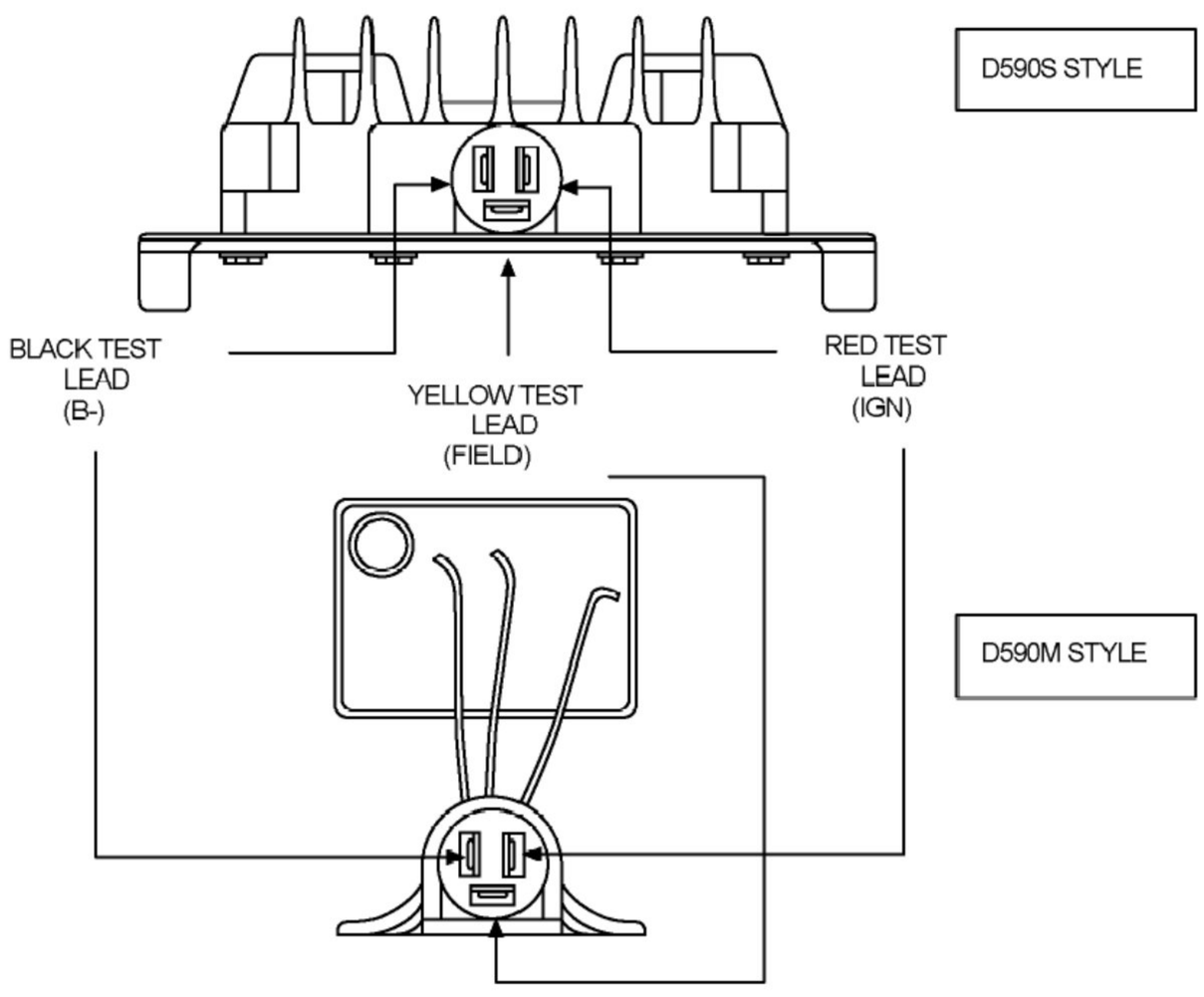

TRANSPO TESTER INSTRUCTIONS

for DELCO type regulators

PART NO.	FLD	VOLT	SET POINT	PART NO.	FLD	VOLT	SET POINT
D812	**A**	**12**	**14.2**	**D824**	**A**	**24**	**27.5**
D812HD	**A**	**12**	**14.2**	**D824HD**	**A**	**24**	**27.5**
D813	**A**	**12**	**14.2**	**D832**	**A**	**32**	**37.5**
D813HD	**A**	**12**	**14.2**				

1. POWER OFF: Set "Voltage Range" and "FLD" switches to desired setting. Connect the voltage regulator as indicated in the diagram below.

2. POWER ON: Field lamp should blink and meter will indicate approximately the set point voltage indicated in the above table.

3. ADDITIONAL TEST:

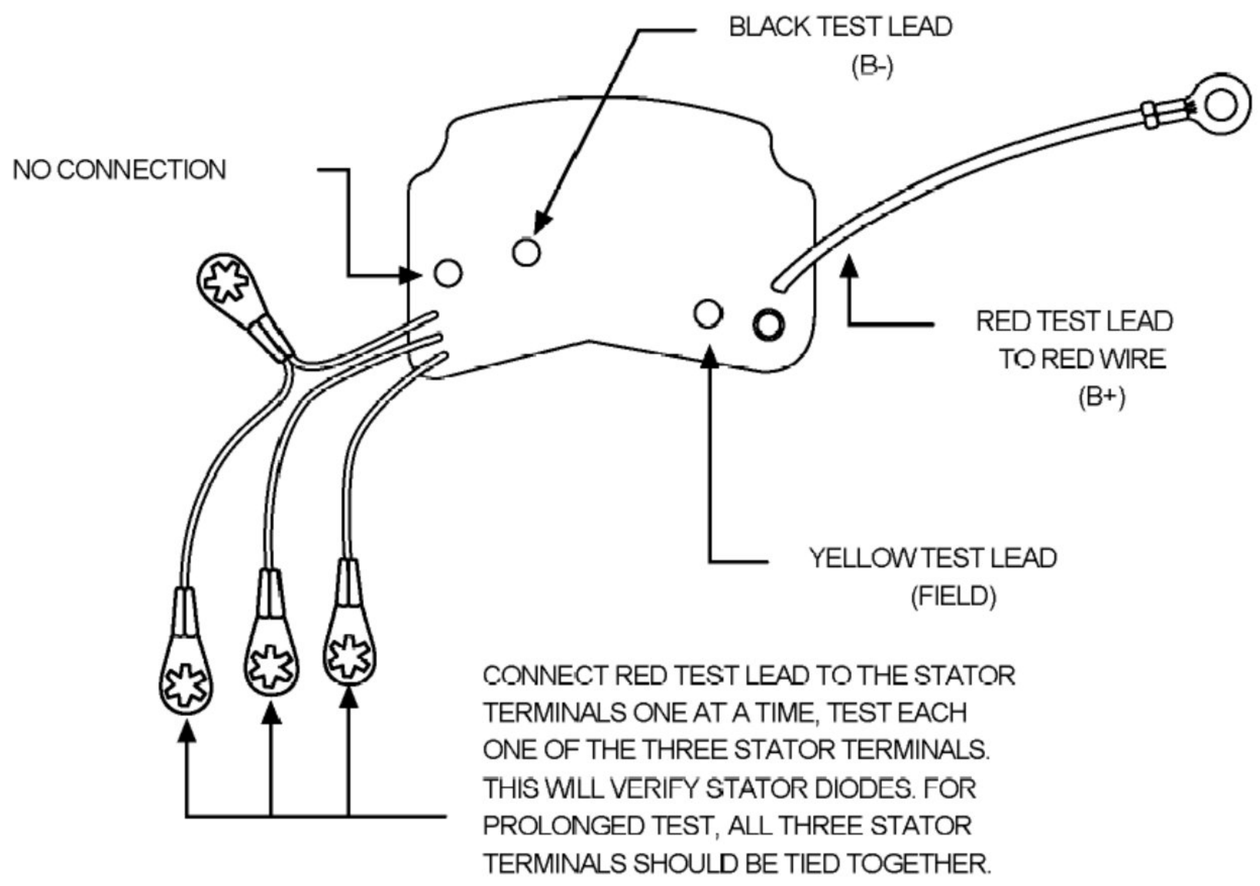

TRANSPO TESTER INSTRUCTIONS

for DELCO type regulators

PART NO.	FLD	VOLT	SET POINT	PART NO.	FLD	VOLT	SET POINT
D817	**A**	**12**	**14.2**				
D817HD	**A**	**12**	**14.2**				

1. POWER OFF: Set "Voltage Range" and "FLD" switches to desired setting. Connect the voltage regulator as indicated in the diagram below.

2. POWER ON: Field lamp should blink and meter will indicate approximately the set point voltage indicated in the above table.

3. ADDITIONAL TEST:

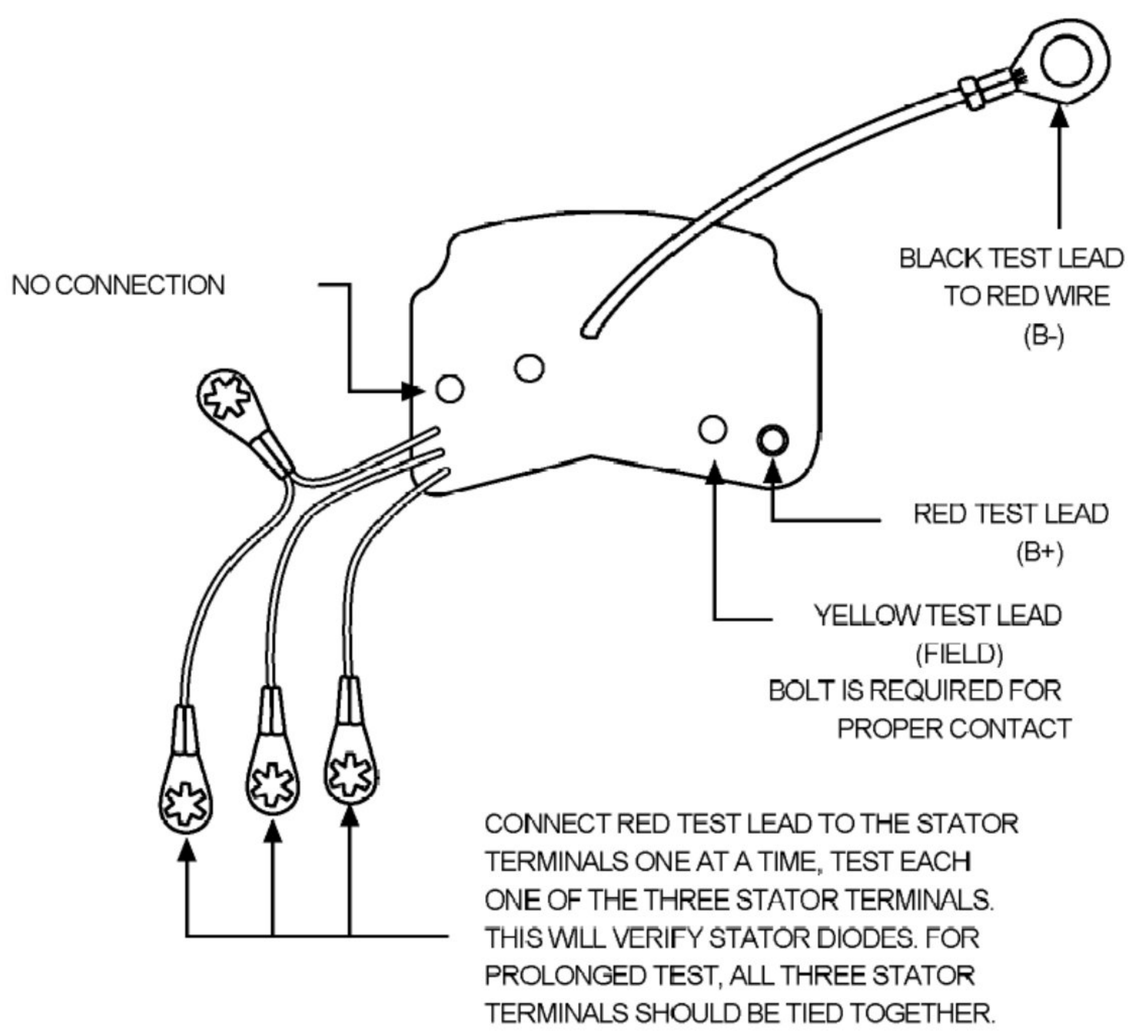

TRANSPO TESTER INSTRUCTIONS

for DELCO type regulators

PART NO.	FLD	VOLT	SET POINT	PART NO.	FLD	VOLT	SET POINT
D7018	**A**	**12**	**14.2**				
D7019	**A**	**24**	**27.5**				

1. POWER OFF: Set "Voltage Range" and "FLD" switches to desired setting. Connect the voltage regulator as indicated in the diagram below.

2. POWER ON: Field lamp should blink and meter will indicate approximately the set point voltage indicated in the above table.

3. ADDITIONAL TEST: Remove white test lead from regulator's wire marked "stator". Field lamp should turn off and the meter will indicate low voltage.

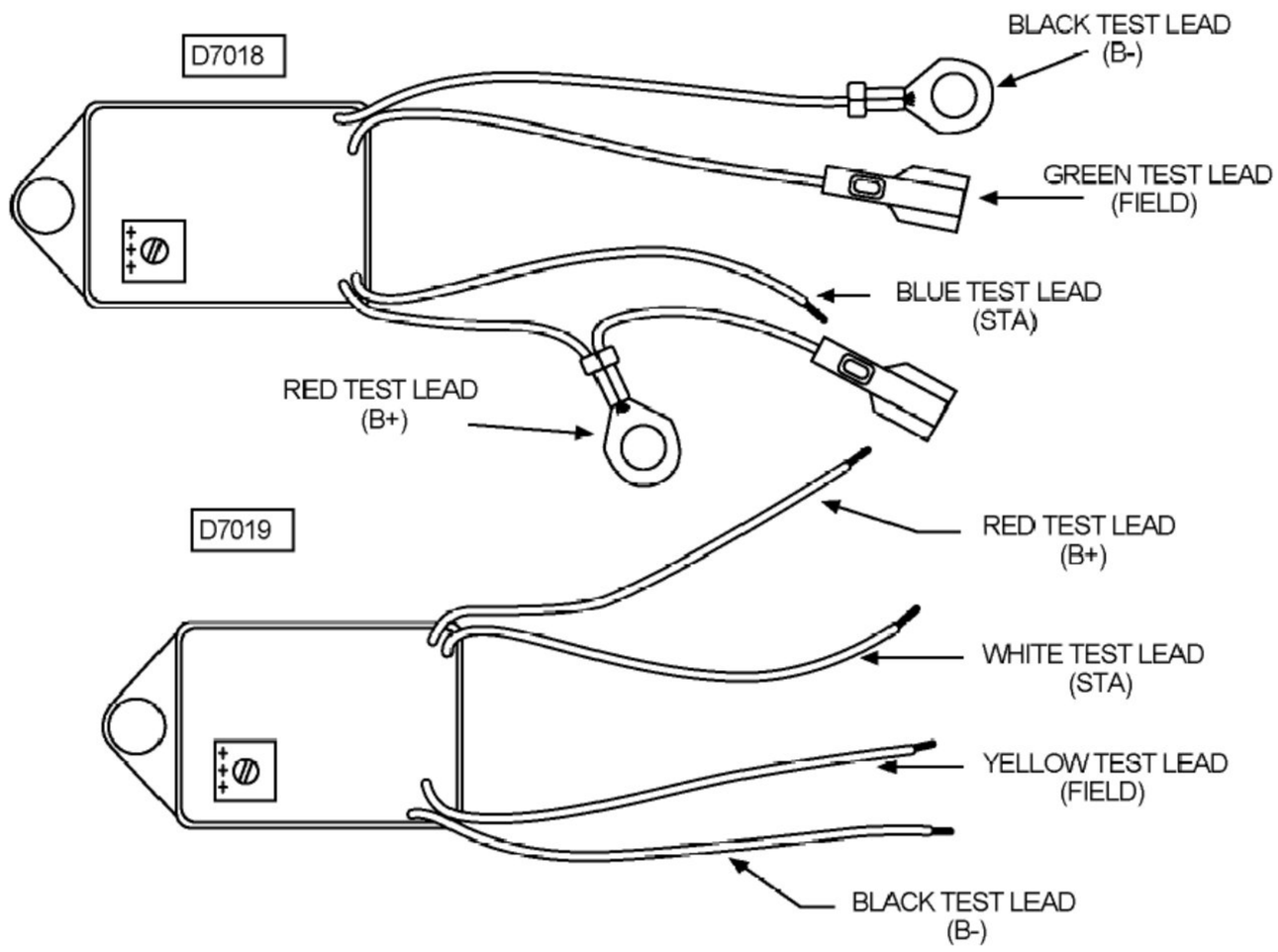

TRANSPO TESTER INSTRUCTIONS

for DELCO type regulators

PART NO.	FLD	VOLT	SET POINT	PART NO.	FLD	VOLT	SET POINT
DE606	**A**	**12**	**14.5**				
DE607	**A**	**12**	**14.5**				

1. POWER OFF: Set "Voltage Range" and "FLD" switches to desired setting. Connect the voltage regulator as indicated in the diagram below.

2. POWER ON: Field lamp should blink and meter will indicate approximately the set point voltage indicated in the above table.

3. ADDITIONAL TEST:

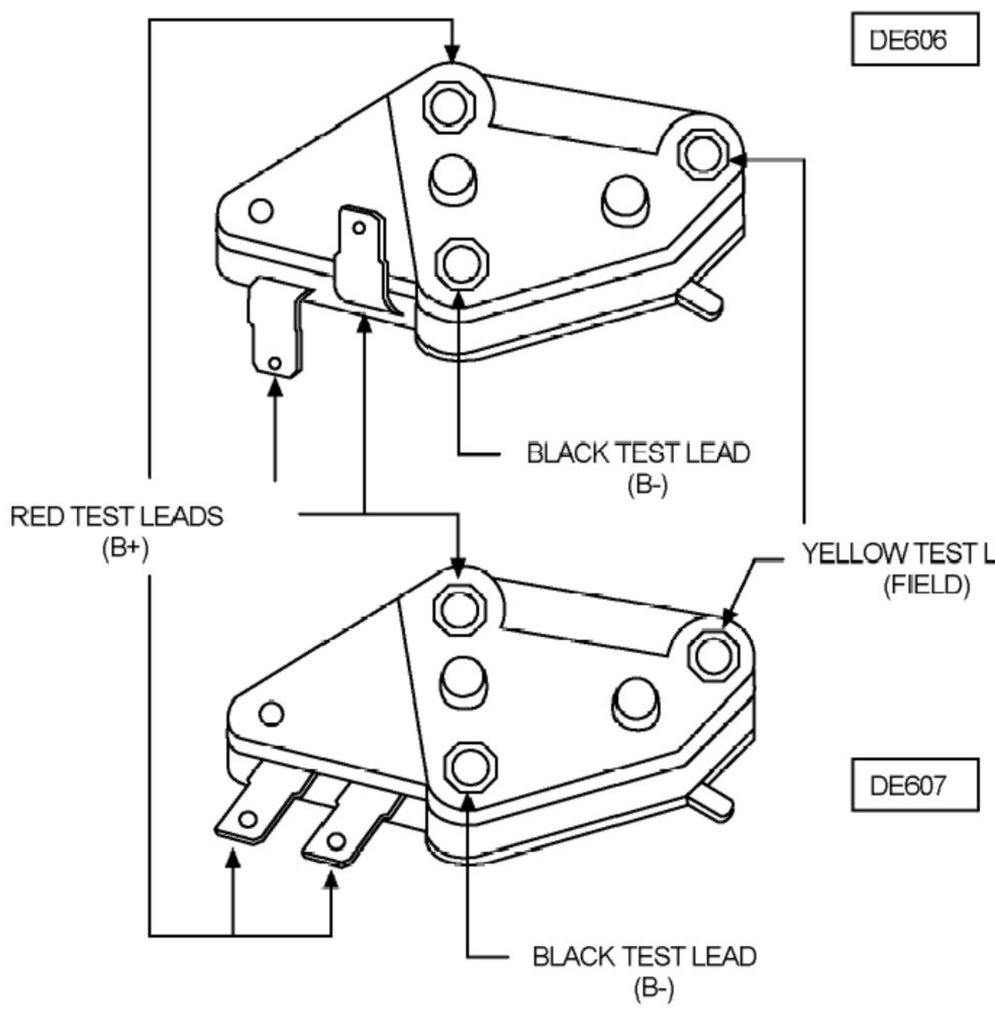

TRANSPO TESTER INSTRUCTIONS

for DELCO type regulators

PART NO.	FLD	VOLT	SET POINT	PART NO.	FLD	VOLT	SET POINT
D529	**A**	**12**	**14.2**				

1. POWER OFF: Set "Voltage Range" and "FLD" switches to desired setting. Connect the voltage regulator as indicated in the diagram below.

2. POWER ON: Field lamp should blink and meter will indicate approximately the set point voltage indicated in the above table.

3. ADDITIONAL TEST: Remove red test lead from stator wires. The field lamp should stay on and the meter will indicate high voltage. Connect red test lead to the post marked " No Connection". Regulator will regulate at the specified set point voltage.

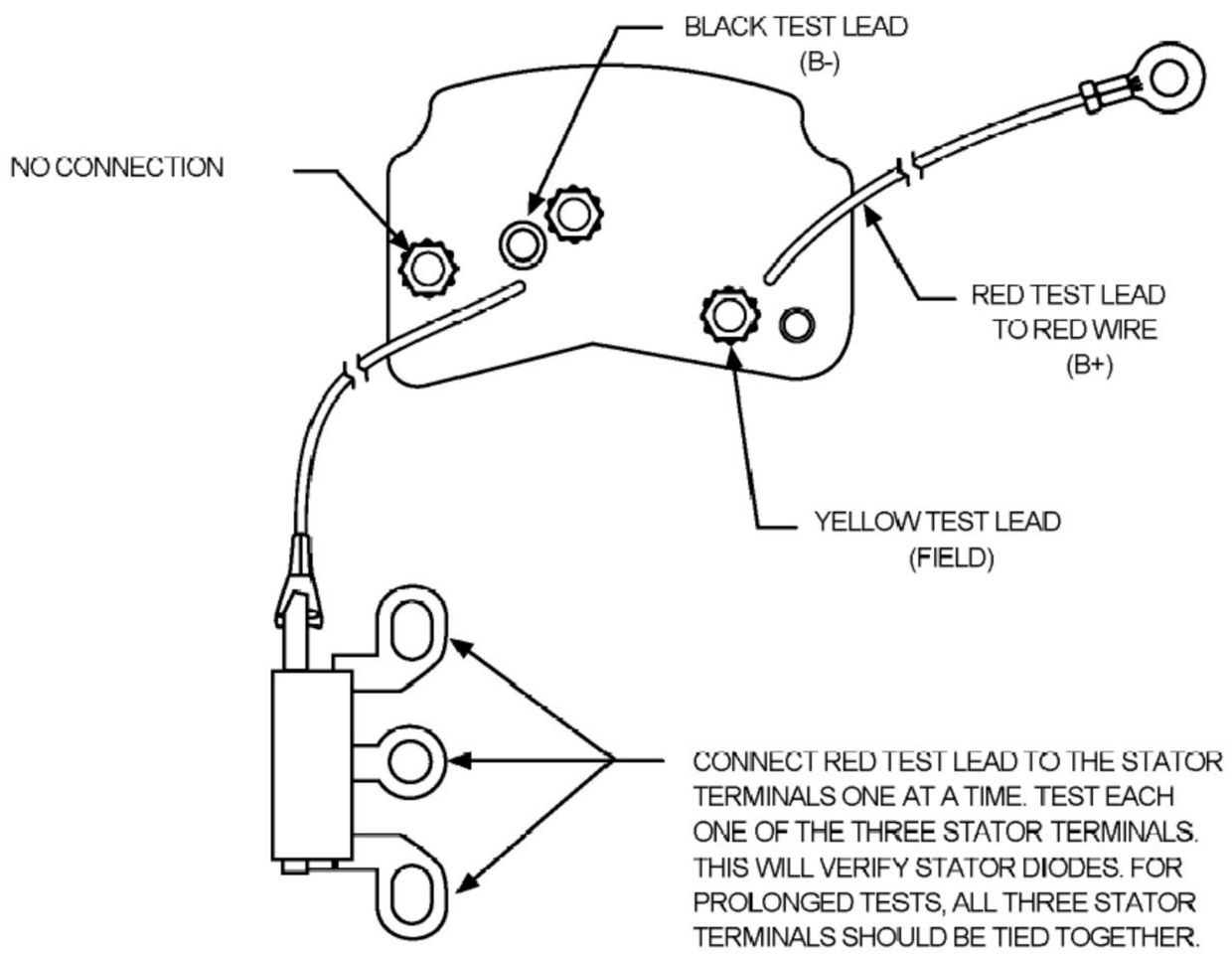

TRANSPO TESTER INSTRUCTIONS

for DELCO type regulators

PART NO.	FLD	VOLT	SET POINT	PART NO.	FLD	VOLT	SET POINT
D424	**B**	**12**	**14.7**				

1. POWER OFF: Set "Voltage Range" and "FLD" switches to desired setting. Connect the voltage regulator as indicated in the diagram below.

2. POWER ON: Field lamp should blink and meter will indicate approximately the set point voltage indicated in the above table.

3. ADDITIONAL TEST: Remove red test lead from terminal marked "stator". The indicator light will turn on, field lamp will stay on and meter will indicate approximately 12V. Disconnect the test lead from "L" terminal . Regulator will turn off and the meter will indicate 12V.

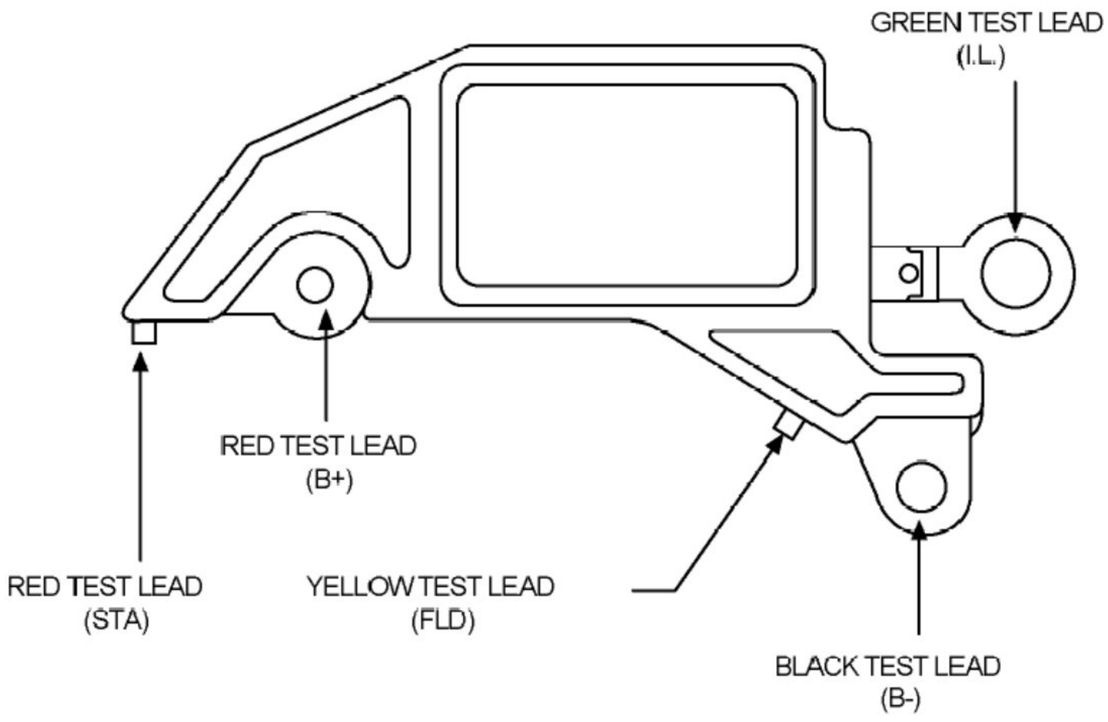

TRANSPO TESTER INSTRUCTIONS

for DELCO type regulators

PART NO.	FLD	VOLT	SET POINT	PART NO.	FLD	VOLT	SET POINT
D432	**B**	**12**	**14.7**				

1. POWER OFF: Set "Voltage Range" and "FLD" switches to desired setting. Connect the voltage regulator as indicated in the diagram below.

2. POWER ON: Field lamp should blink and meter will indicate approximately the set point voltage indicated in the above table.

3. ADDITIONAL TEST: Remove the white test lead from terminal marked "STATOR". The indicator light will turn on, field lamp will stay on and meter will indicate approximately 12V. Disconnect the test lead from "L" terminal. Regulator will turn off and the meter will indicate 12V.

Using VRC1000: To check for over Voltage, push the “Over Voltage” switch and the “Lamp Indicator” will turn on between 16.0V and 17.1V. Push the choke drive and the “Choke Drive Indicator Lamp” will turn on, if present.

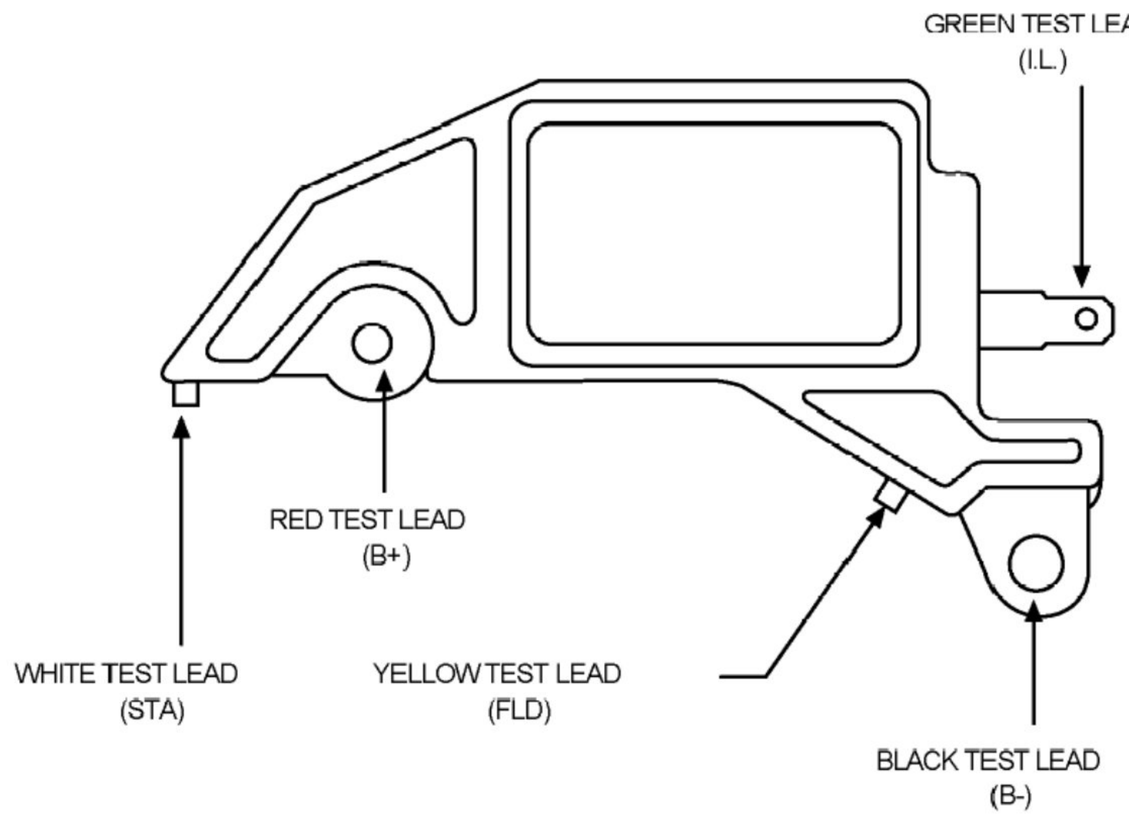

TRANSPO TESTER INSTRUCTIONS

for DELCO type regulators

PART NO.	FLD	VOLT	SET POINT	PART NO.	FLD	VOLT	SET POINT
D9206	**B**	**6**	**7.8**				
D9207	**B**	**6**	**7.8**				

1. POWER OFF: Set "Voltage Range" and "FLD" switches to desired setting. Connect the voltage regulator as indicated in the diagram below.

2. POWER ON: Field lamp should blink and meter will indicate approximately the set point voltage indicated in the above table.

3. ADDITIONAL TEST: On D9207, remove test lead from the terminal marked "STA". Field lamp will turn off , indicator light will turn on, and the meter will indicate low voltage.

NOTE: Transpo's standard voltage regulator tester offers 12, 24, and 32 volts. However, we also offer testers with additional 6 and 8 volt ranges.

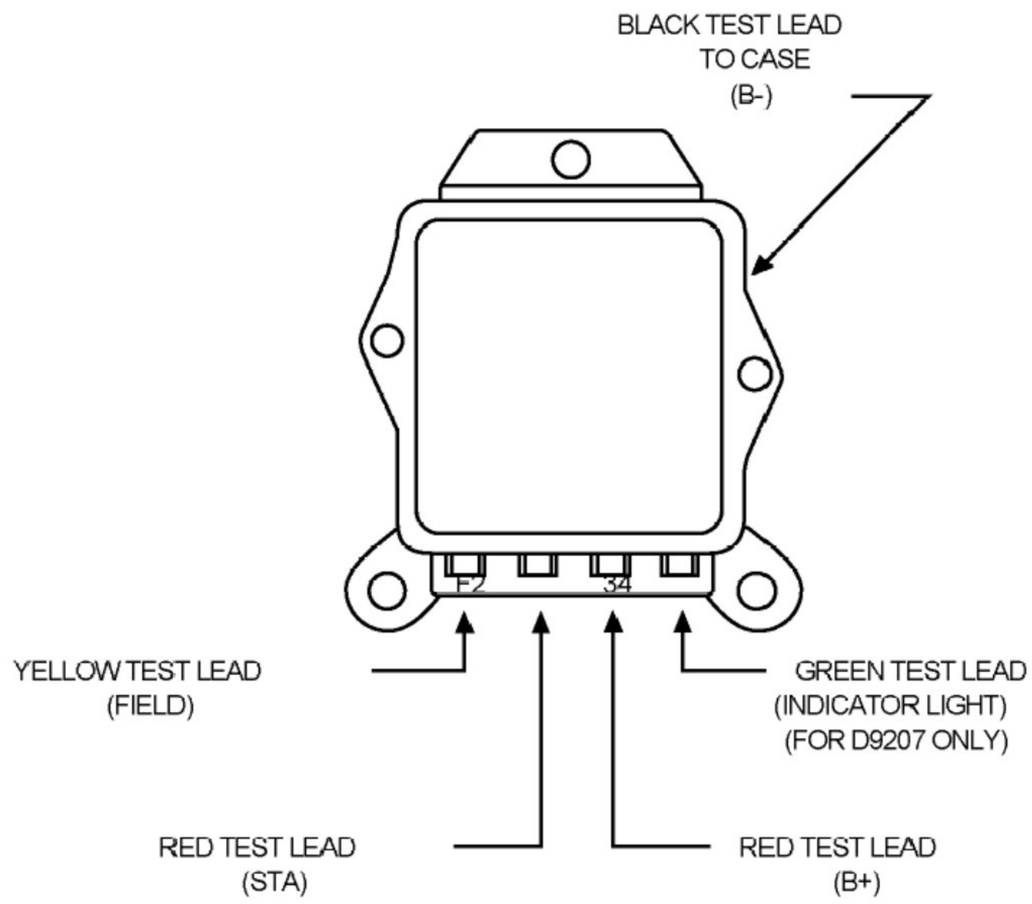

TRANSPO TESTER INSTRUCTIONS

for DELCO type regulators

PART NO.	FLD	VOLT	SET POINT	PART NO.	FLD	VOLT	SET POINT
DE611	**A**	**12**	**14.7**				
DE615	**A**	**12**	**14.7**				

1. POWER OFF: Set "Voltage Range" and "FLD" switches to desired setting. Connect the voltage regulator as indicated in the diagram below.

2. POWER ON: Field lamp should blink and meter will indicate approximately the set point voltage indicated in the above table.

3. ADDITIONAL TEST:

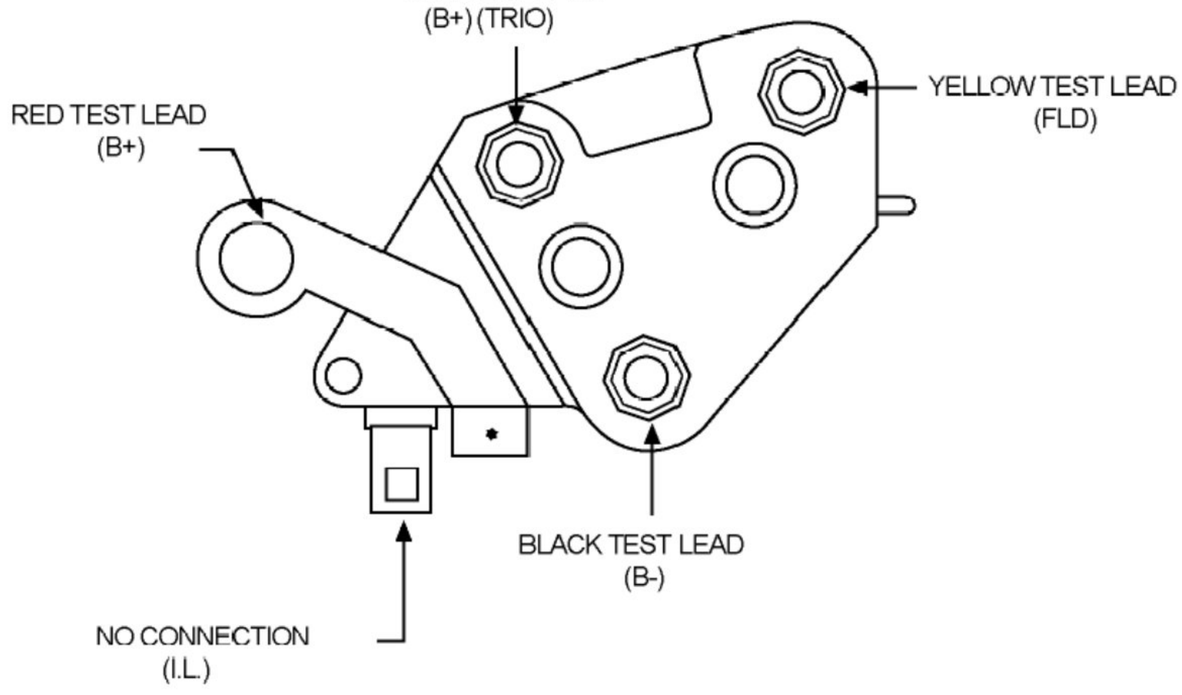

TRANSPO TESTER INSTRUCTIONS

for DELCO type regulators

PART NO.	FLD	VOLT	SET POINT	PART NO.	FLD	VOLT	SET POINT
D7050	**B**	**12**	**14.7**				

1. POWER OFF: Set "Voltage Range" and "FLD" switches to desired setting. Connect the voltage regulator as indicated in the diagram below.

2. POWER ON: Field lamp should blink and meter will indicate approximately the set point voltage indicated in the above table.

3. ADDITIONAL TEST: Remove white test lead from terminal marked "stator". Regulator will turn off and the meter will indicate 12V.

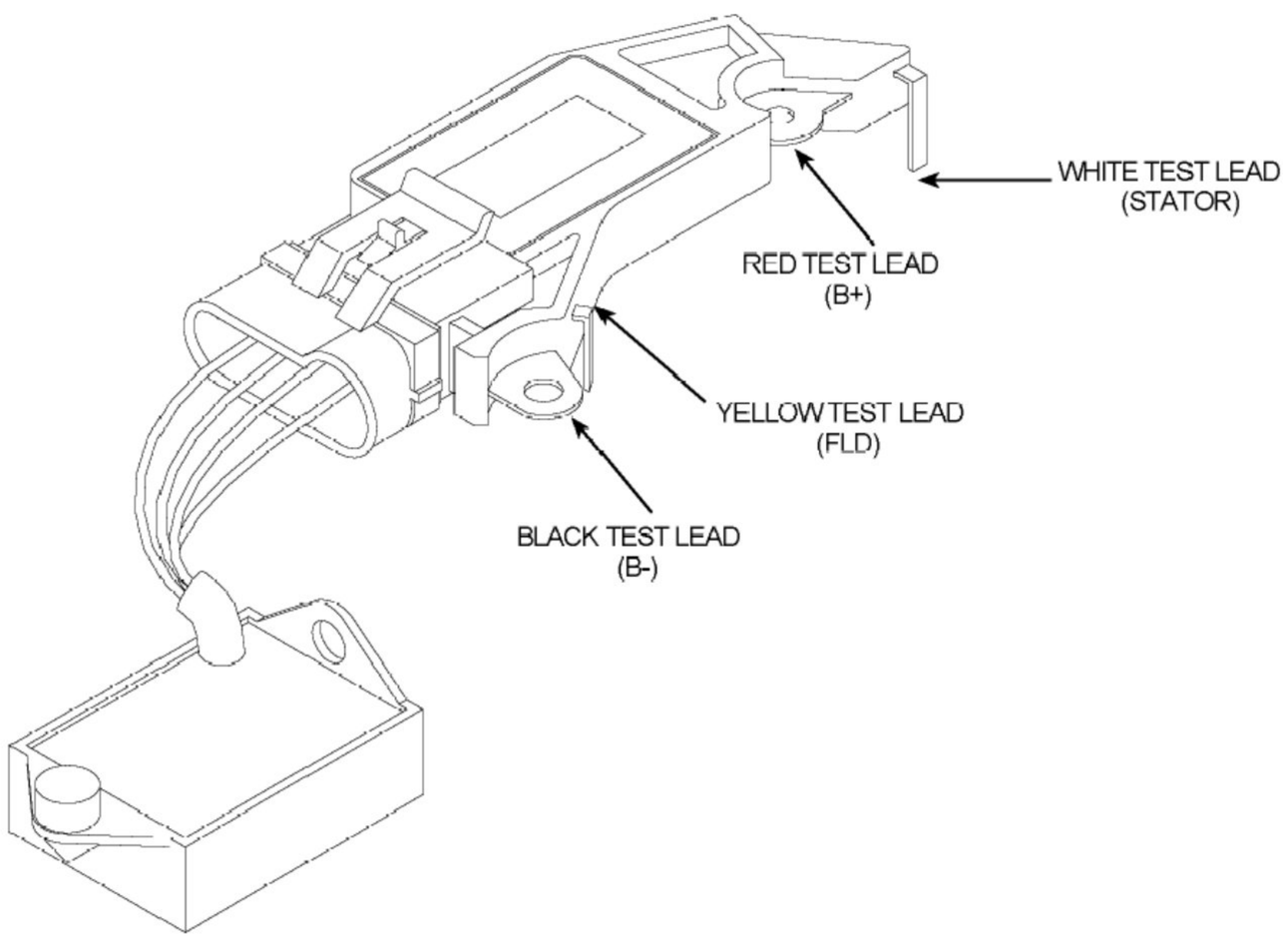

TRANSPO TESTER INSTRUCTIONS

for DELCO type regulators

PART NO.	FLD	VOLT	SET POINT	PART NO.	FLD	VOLT	SET POINT
DE701	**A**	**12**	**14.7**				
DE701-1	**A**	**12**	**14.7**				

1. POWER OFF: Set "Voltage Range" and "FLD" switches to desired setting. Connect the voltage regulator as indicated in the diagram below.

2. POWER ON: Field lamp should blink and meter will indicate approximately the set point voltage indicated in the above table.

3. ADDITIONAL TEST:

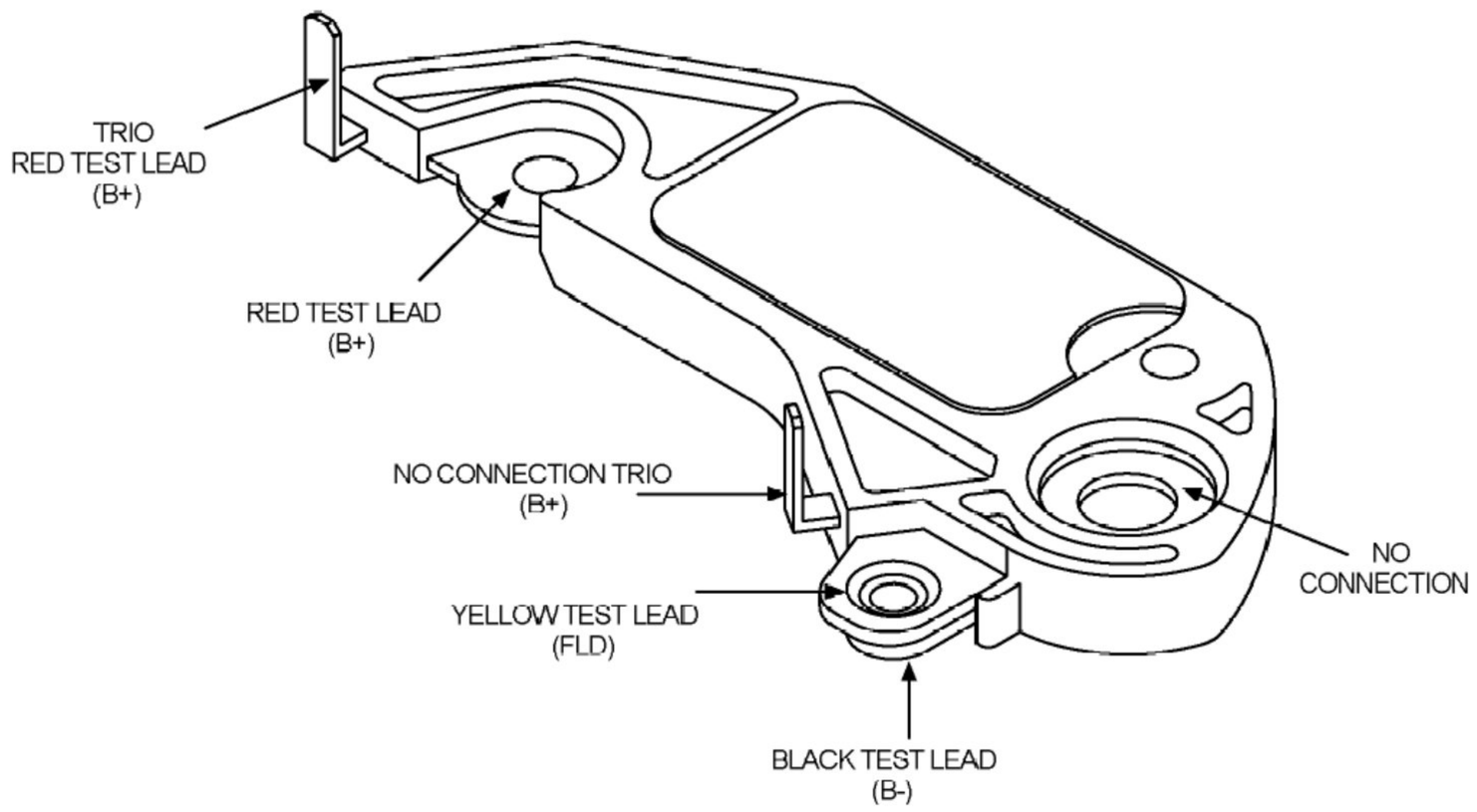

TRANSPO TESTER INSTRUCTIONS

for DELCO type regulators

PART NO.	FLD	VOLT	SET POINT	PART NO.	FLD	VOLT	SET POINT
D702	**B**	**12**	**14.5**	**D706**	**B**	**12**	**14.1**
D702HD	**B**	**12**	**14.79**				
D703	**B**	**12**	**14.5**				
D705	**B**	**12**	**14.7**				

1. POWER OFF: Set "Voltage Range" and "FLD" switches to desired setting. Connect the voltage regulator as indicated in the diagram below.

2. POWER ON: Field lamp should blink and meter will indicate approximately the set point voltage indicated in the above table.

3. ADDITIONAL TEST: Remove white test lead from terminal marked "stator". The indicator light will turn on, field lamp will stay on and the meter will indicate approximately 12 volts.

Using VRC1000: To check for over Voltage, push the "Over Voltage" switch and the "Lamp Indicator" will turn on between 16.0V and 17.1V.

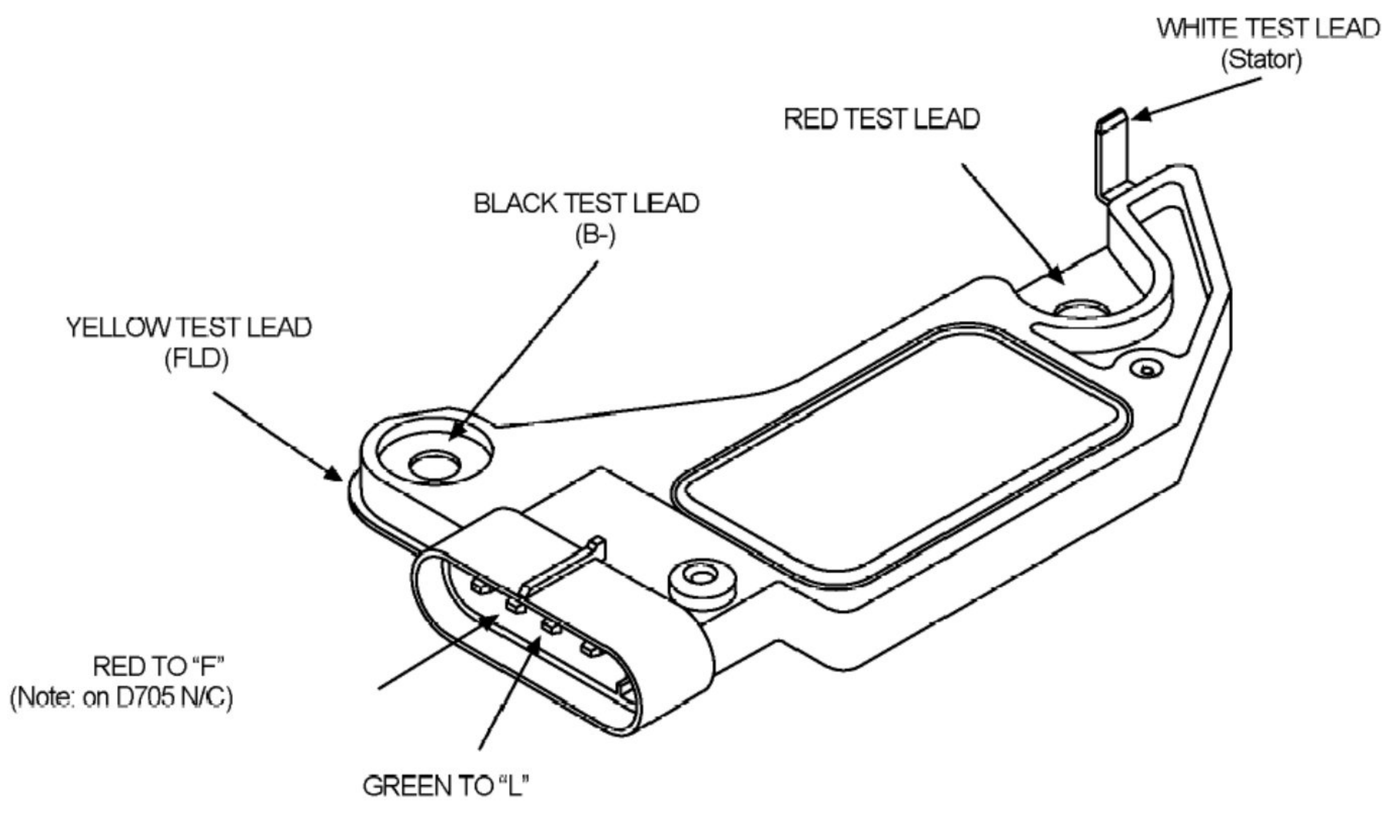

TRANSPO TESTER INSTRUCTIONS

for DELCO type regulators

PART NO.	FLD	VOLT	SET POINT	PART NO.	FLD	VOLT	SET POINT
D33	**A**	**12**	**14.1**				
D22	**A**	**12**	**14.5**				

1. POWER OFF: Set "Voltage Range" and "FLD" switches to desired setting. Connect the voltage regulator as indicated in the diagram below.

2. POWER ON: Field lamp should blink and meter will indicate approximately the set point voltage indicated in the above table.

3. ADDITIONAL TEST:

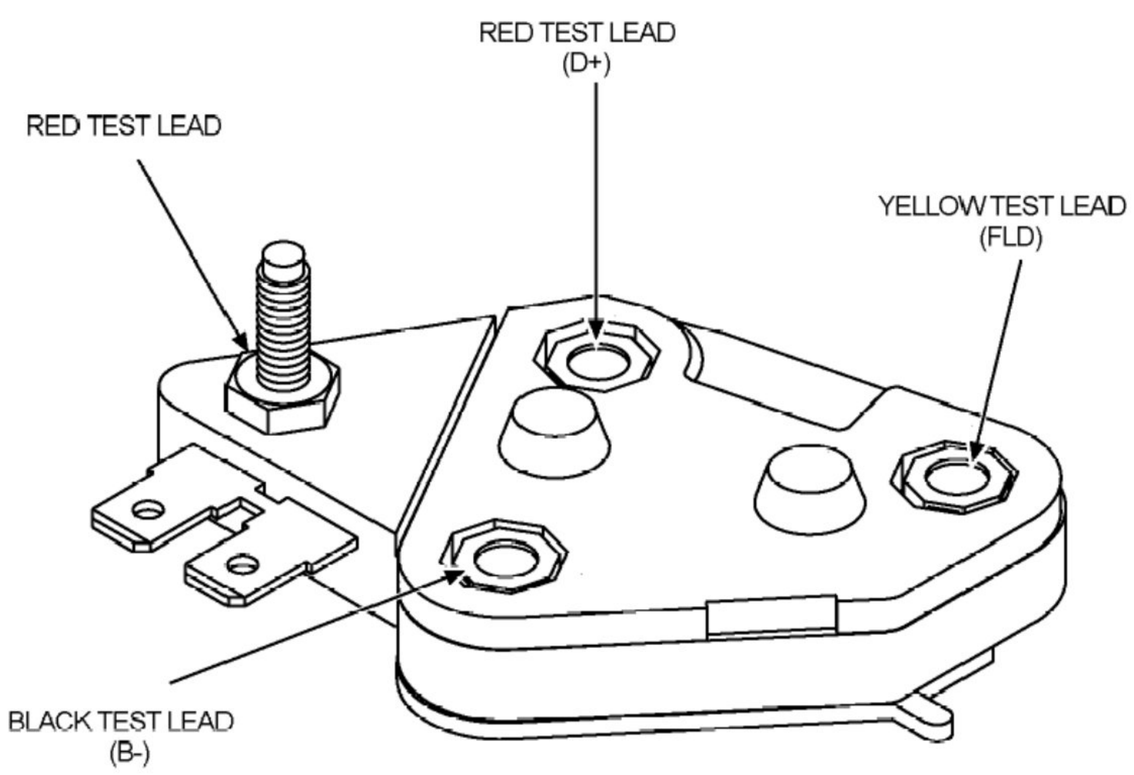

TRANSPO TESTER INSTRUCTIONS

for DELCO type regulators

PART NO.	FLD	VOLT	SET POINT	PART NO.	FLD	VOLT	SET POINT
D401	**A**	**24**	**27.7**				

1. POWER OFF: Set "Voltage Range" and "FLD" switches to desired setting. Connect the voltage regulator as indicated in the diagram below.

2. POWER ON: Field lamp should blink and meter will indicate approximately the set point voltage indicated in the above table.

3. ADDITIONAL TEST:

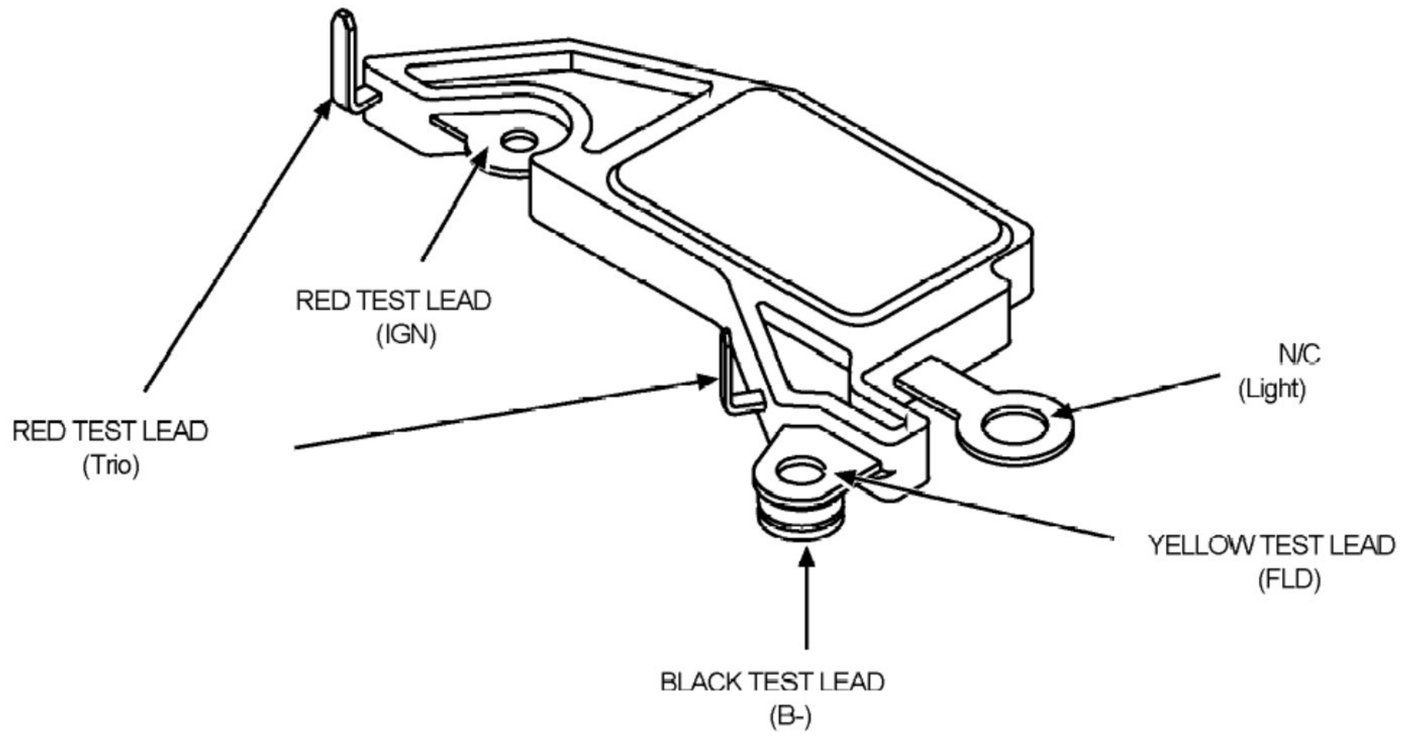

TRANSPO TESTER INSTRUCTIONS

for DELCO type regulators

PART NO.	FLD	VOLT	SET POINT	PART NO.	FLD	VOLT	SET POINT
D698	**B**	**12**	**14.2**				
D699	**B**	**24**	**27.5**				

1. POWER OFF: Set "Voltage Range" and "FLD" switches to desired setting. Connect the voltage regulator as indicated in the diagram below.

2. POWER ON: Field lamp should blink and meter will indicate approximately the set point voltage indicated in the above table.

3. ADDITIONAL TEST:

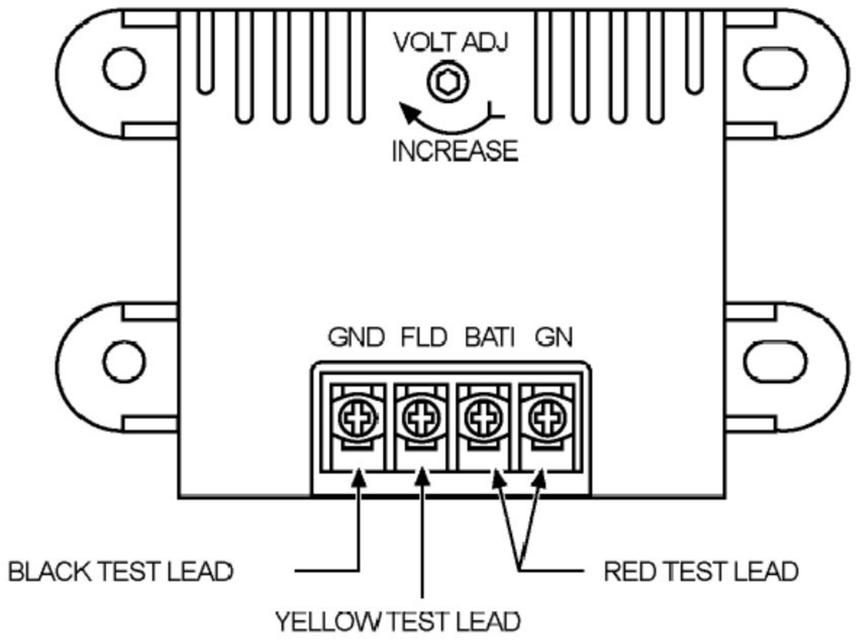

TRANSPO TESTER INSTRUCTIONS

for DELCO type regulators

PART NO.	FLD	VOLT	SET POINT	PART NO.	FLD	VOLT	SET POINT
D445	**B**	**12**	**14.5**				

1. POWER OFF: Set "Voltage Range" and "FLD" switches to desired setting. Connect the voltage regulator as indicated in the diagram below.

2. POWER ON: Field lamp should blink and meter will indicate approximately the set point voltage indicated in the above table.

3. ADDITIONAL TEST: Remove white test lead from terminal marked "stator. The indicator light will turn on, field lamp will stay on and the meter will indicate approximately 12 volts.

Using VRC1000: To check for over Voltage, push the "Over Voltage" switch and the "Lamp Indicator" will turn on between 16.0V and 17.1V.

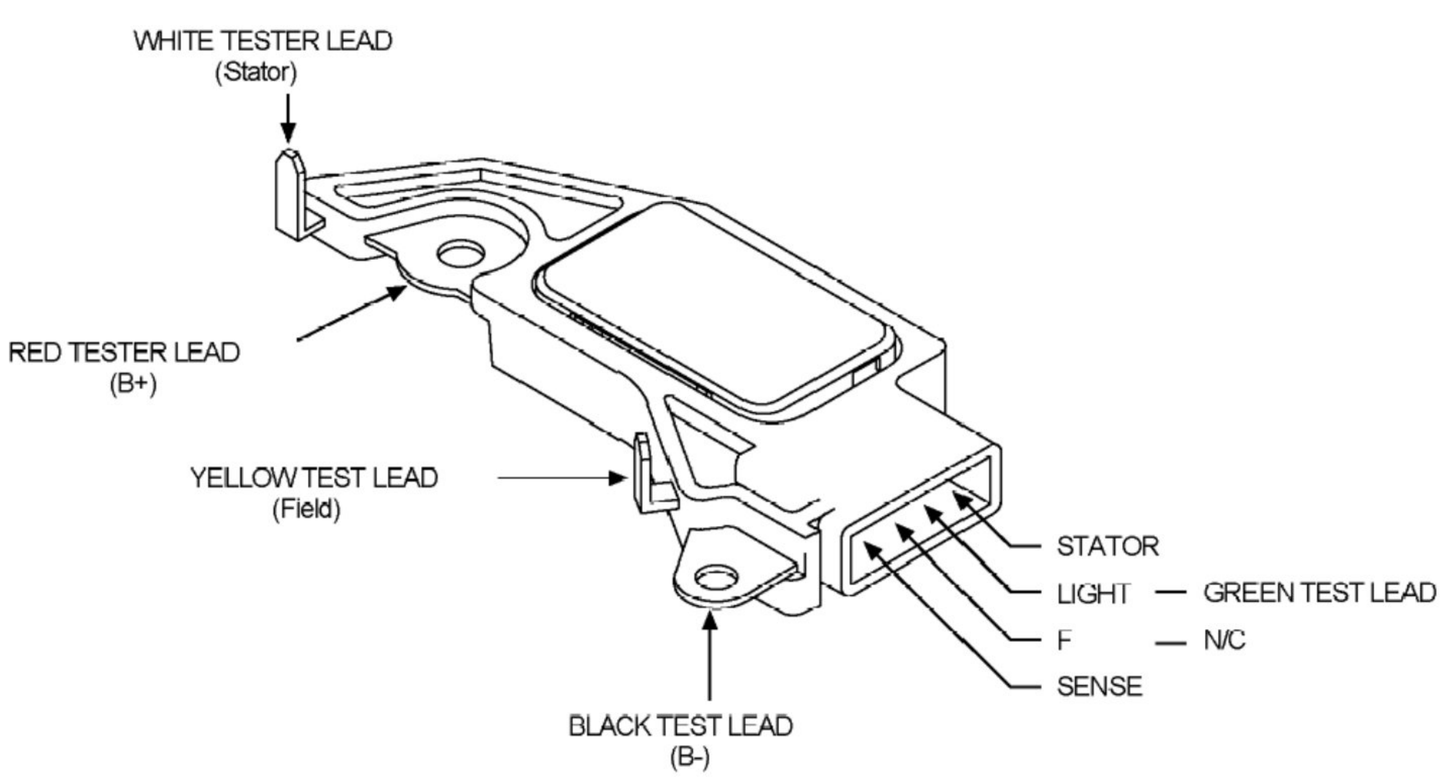

TRANSPO TESTER INSTRUCTIONS

for DELCO type regulators

PART NO.	FLD	VOLT	SET POINT	PART NO.	FLD	VOLT	SET POINT
D712	**B**	**12**	**14.6**	**D734**	**B**	**12**	**14.6**
D718	**B**	**12**	**14.7**	**D749**	**B**	**12**	**14.6**
D719	**B**	**12**	**14.75**	**D748**	**B**	**12**	**14.8**
D729	**B**	**12**	**14.75**	**D752**	**B**	**12**	**14.7**

1. POWER OFF: Set "Voltage Range" and "FLD" switches to desired setting. Connect the voltage regulator as indicated in the diagram below.

2. POWER ON: Field lamp should blink and meter will indicate approximately the set point voltage indicated in the above table.

3. ADDITIONAL TEST: Remove white test lead from terminal marked "stator". the indicator light will turn on, field lamp will stay on and meter will indicate approximately 12v. Disconnect the test lead from "L" terminal. Regulator will turn off and the meter will indicate 12v. On "I" type voltage regulators, connect the regulators as per diagram below except do not connect the indicator light to the "L" terminal. Connect red test lead to the terminal marked "I/F" and same results as step number 2 should be noticed.

Using VRC1000: To check for over Voltage, push the "Over Voltage" switch and the "Lamp Indicator" will turn on between 16.0V and 17.1V.

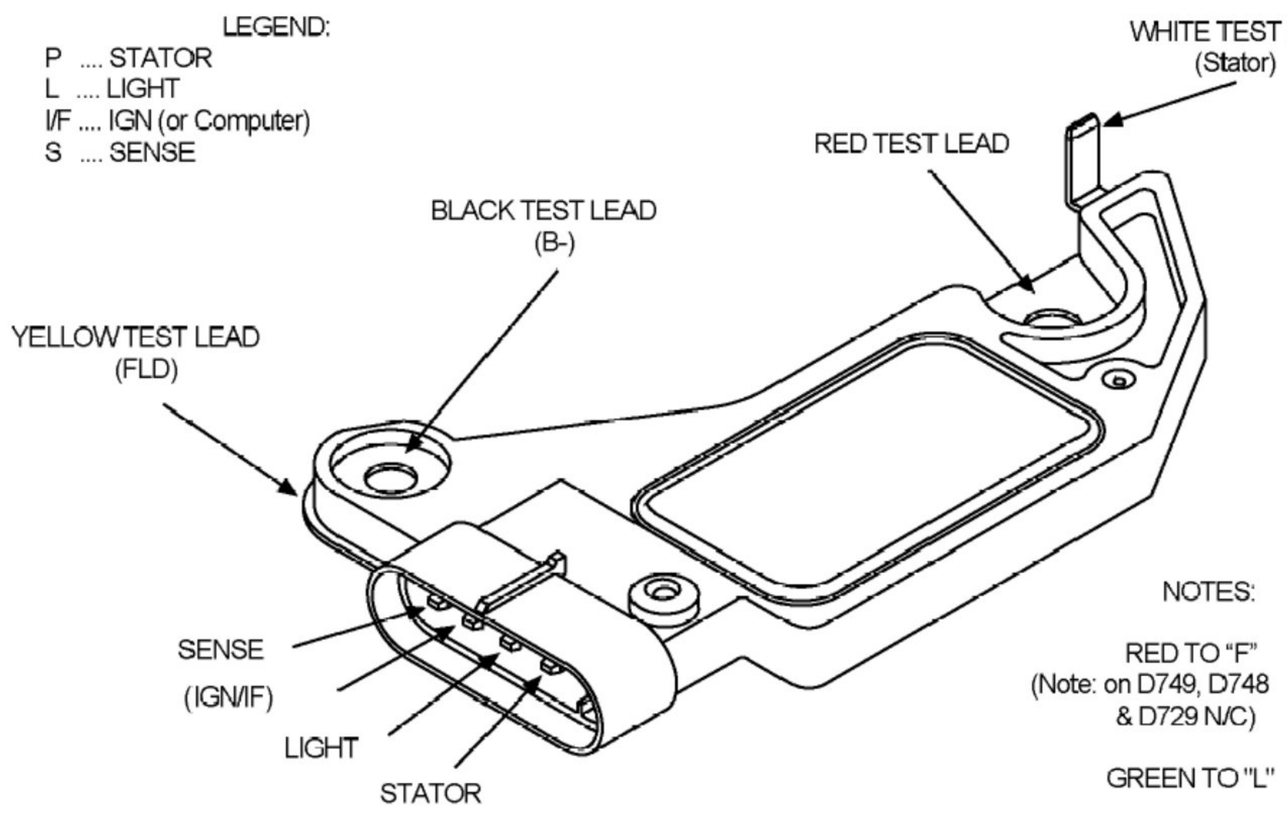

TRANSPO TESTER INSTRUCTIONS

for DELCO type regulators

PART NO.	FLD	VOLT	SET POINT	PART NO.	FLD	VOLT	SET POINT
D198	**B**	**12**	**14.8**	**D202**	**B**	**12**	**14.7**
D199	**B**	**12**	**14.8**	**D203**	**B**	**12**	**14.8**
D200	**B**	**12**	**14.7**				
D201	**B**	**12**	**14.7**				

1. POWER OFF: Set "Voltage Range" and "FLD" switches to desired setting. Connect the voltage regulator as indicated in the diagram below.

2. POWER ON: Field lamp should blink and meter will indicate approximately the set point voltage indicated in the above table.

3. ADDITIONAL TEST: Remove Stator terminal, field light stays on voltage reads 12 volts and lamp light comes on. Remove light terminal (and "I" terminal on PLIS type), voltage regulator turns off.
Using VRC1000: To check for over Voltage, push the "Over Voltage" switch and the "Lamp Indicator" will turn on between 16.0V and 17.1V.

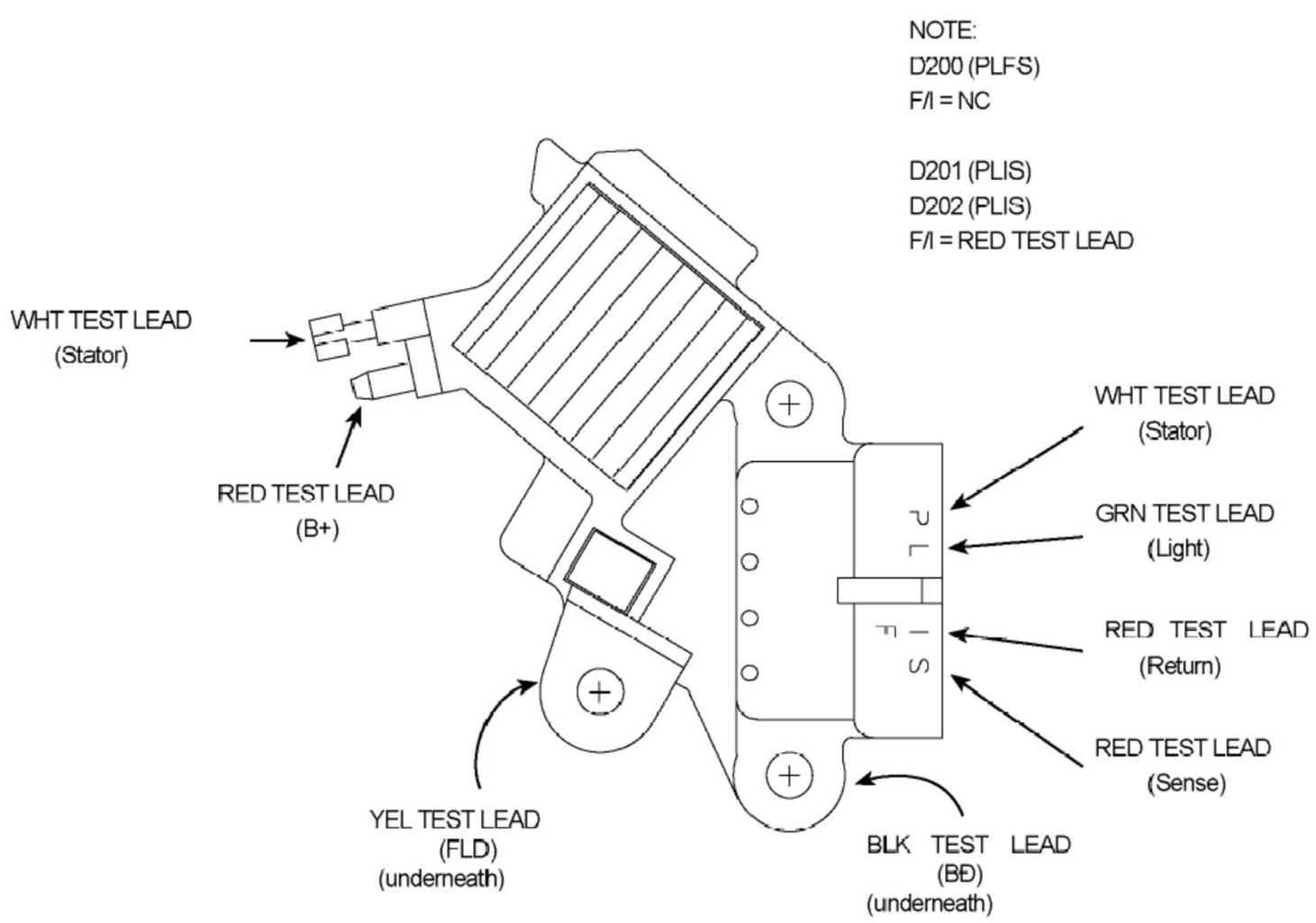

TRANSPO TESTER INSTRUCTIONS

for DELCO type regulators

PART NO.	FLD	VOLT	SET POINT	PART NO.	FLD	VOLT	SET POINT
D3101	**B**	**12**	**14.2**				

1. POWER OFF: Set "Voltage Range" and "FLD" switches to desired setting. Connect the voltage regulator as indicated in the diagram below.

2. POWER ON: Field lamp should blink and meter will indicate approximately the set point voltage indicated in the above table.

3. ADDITIONAL TEST: Remove WHITE TEST LEAD from terminal marked "STATOR", 12 volt Lamp will turn on and Field light will turn off.

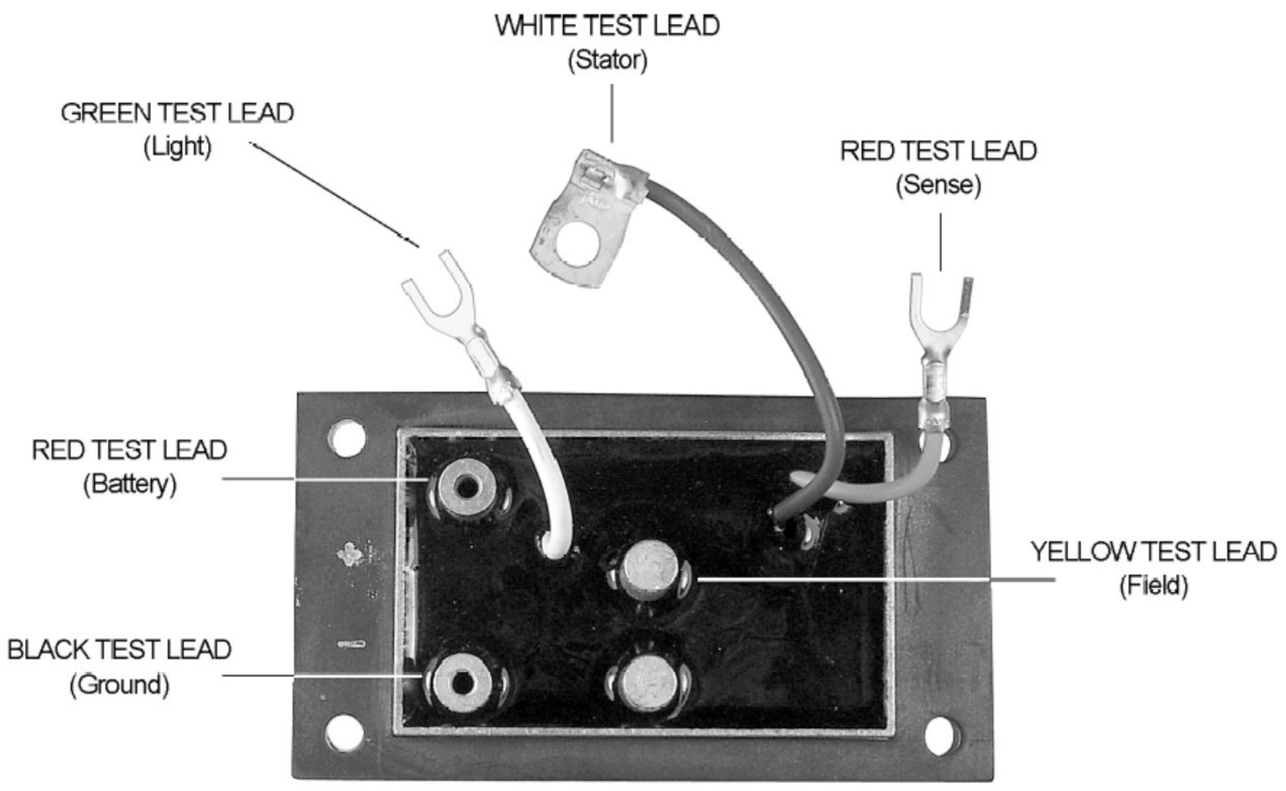

TRANSPO TESTER INSTRUCTIONS

for DELCO type regulators

PART NO.	FLD	VOLT	SET POINT	PART NO.	FLD	VOLT	SET POINT
D10AC	**B**	**12**	**14.2**				
D22AC	**B**	**12**	**14.2**				

1. POWER OFF: Set "Voltage Range" and "FLD" switches to desired setting. Connect the voltage regulator as indicated in the diagram below.

2. POWER ON: Field lamp should blink and meter will indicate approximately the set point voltage indicated in the above table.

3. ADDITIONAL TEST:

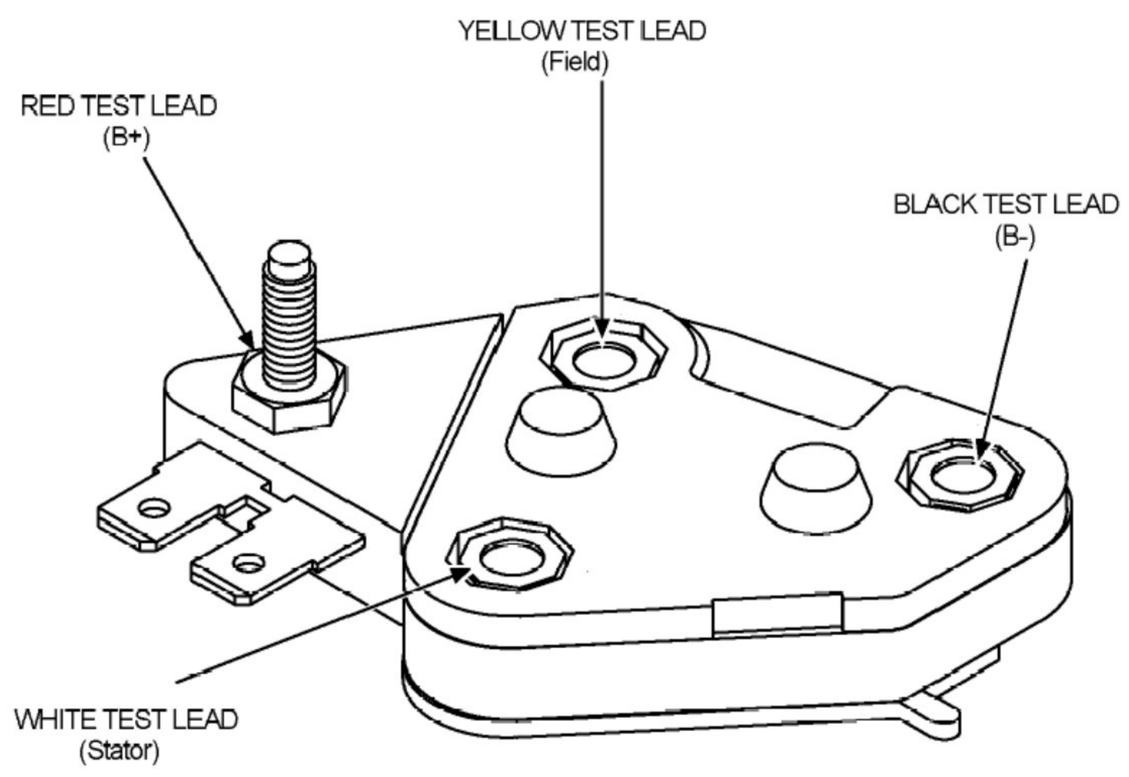

TRANSPO TESTER INSTRUCTIONS

for DELCO type regulators

PART NO.	FLD	VOLT	SET POINT	PART NO.	FLD	VOLT	SET POINT
D404	**A**	**12**	**14.6**				

1. POWER OFF: Set "Voltage Range" and "FLD" switches to desired setting. Connect the voltage regulator as indicated in the diagram below.

2. POWER ON: Field lamp should blink and meter will indicate approximately the set point voltage indicated in the above table.

3. ADDITIONAL TEST:

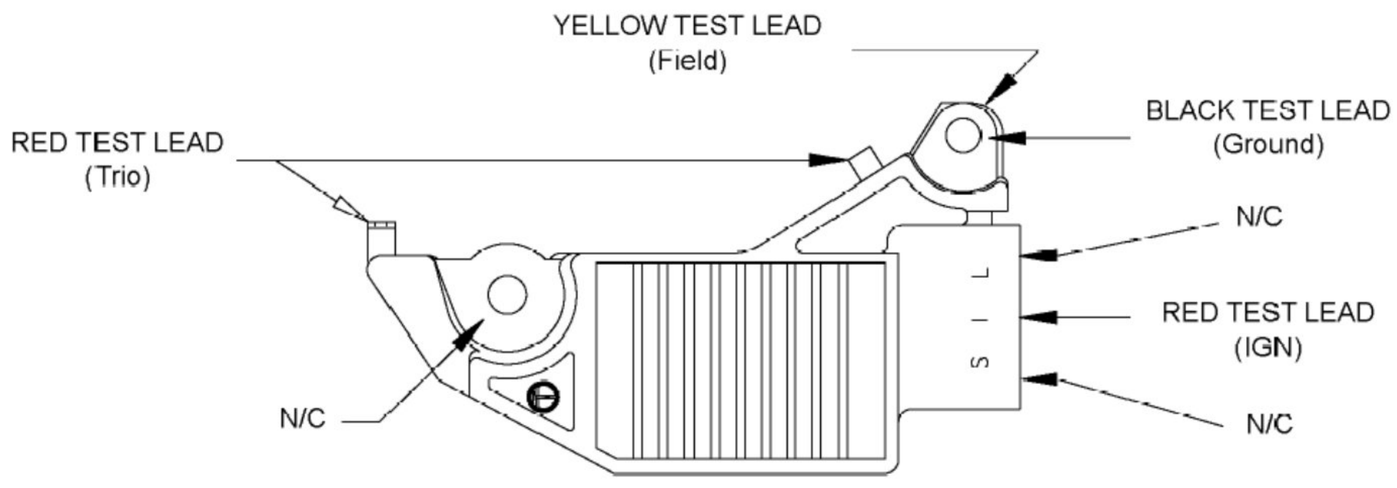

TRANSPO TESTER INSTRUCTIONS

for DELCO type regulators

PART NO.	FLD	VOLT	SET POINT	PART NO.	FLD	VOLT	SET POINT
D10SE132-1	**A**	**12**	**14.8**				
D10SE138-1	**A**	**12**	**14.8**				

1. POWER OFF: Set "Voltage Range" and "FLD" switches to desired setting. Connect the voltage regulator as indicated in the diagram below.

2. POWER ON: Field lamp should blink and meter will indicate approximately the set point voltage indicated in the above table.

3. ADDITIONAL TEST:

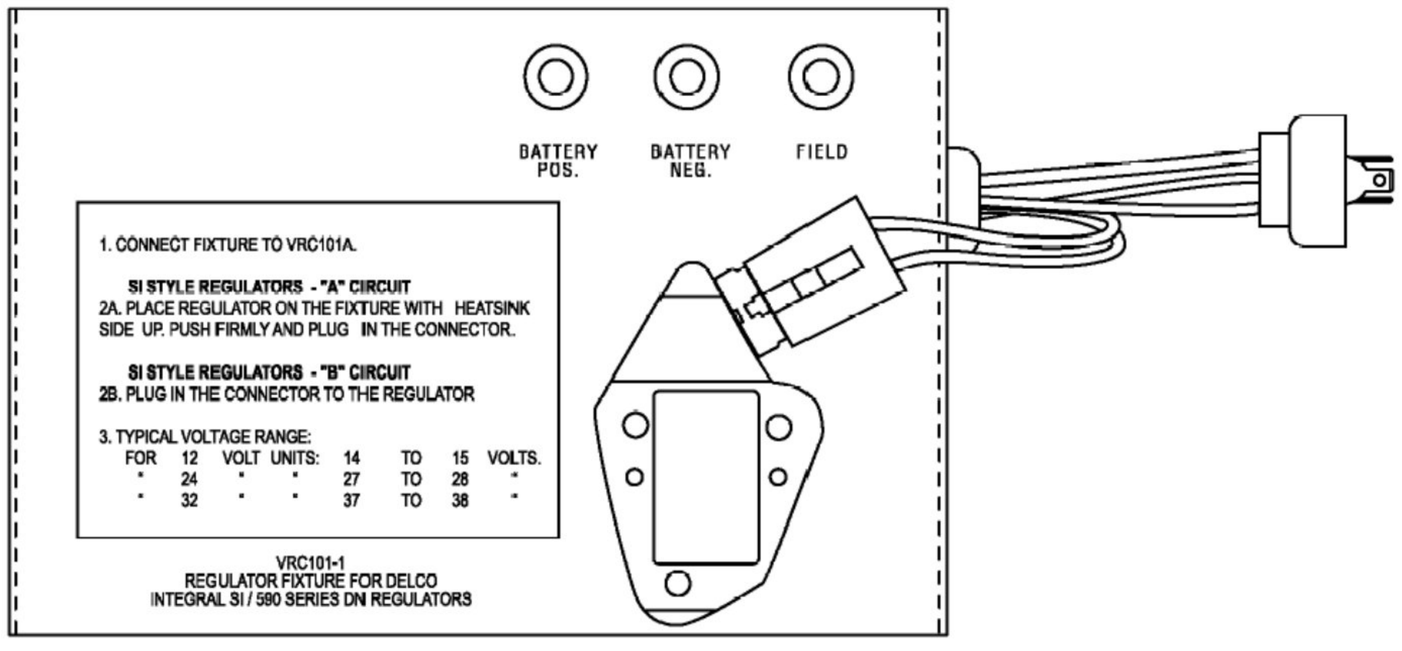

TRANSPO TESTER INSTRUCTIONS

for DELCO type regulators

PART NO.	FLD	VOLT	SET POINT	PART NO.	FLD	VOLT	SET POINT
D751	**A**	**12**	**14.9**				

1. POWER OFF: Set "Voltage Range" and "FLD" switches to desired setting. Connect the voltage regulator as indicated in the diagram below.

2. POWER ON: Field lamp should blink and meter will indicate approximately the set point voltage indicated in the above table.

3. ADDITIONAL TEST: Remove "White" test lead from terminal marked "Stator". The indicator light will turn on, field lamp will stay on and the meter will indicate approximately 12 volts. Remove red test lead from Sense and light will come on. Remove "Green" test lead, lamp will go off and field lamp will go off.

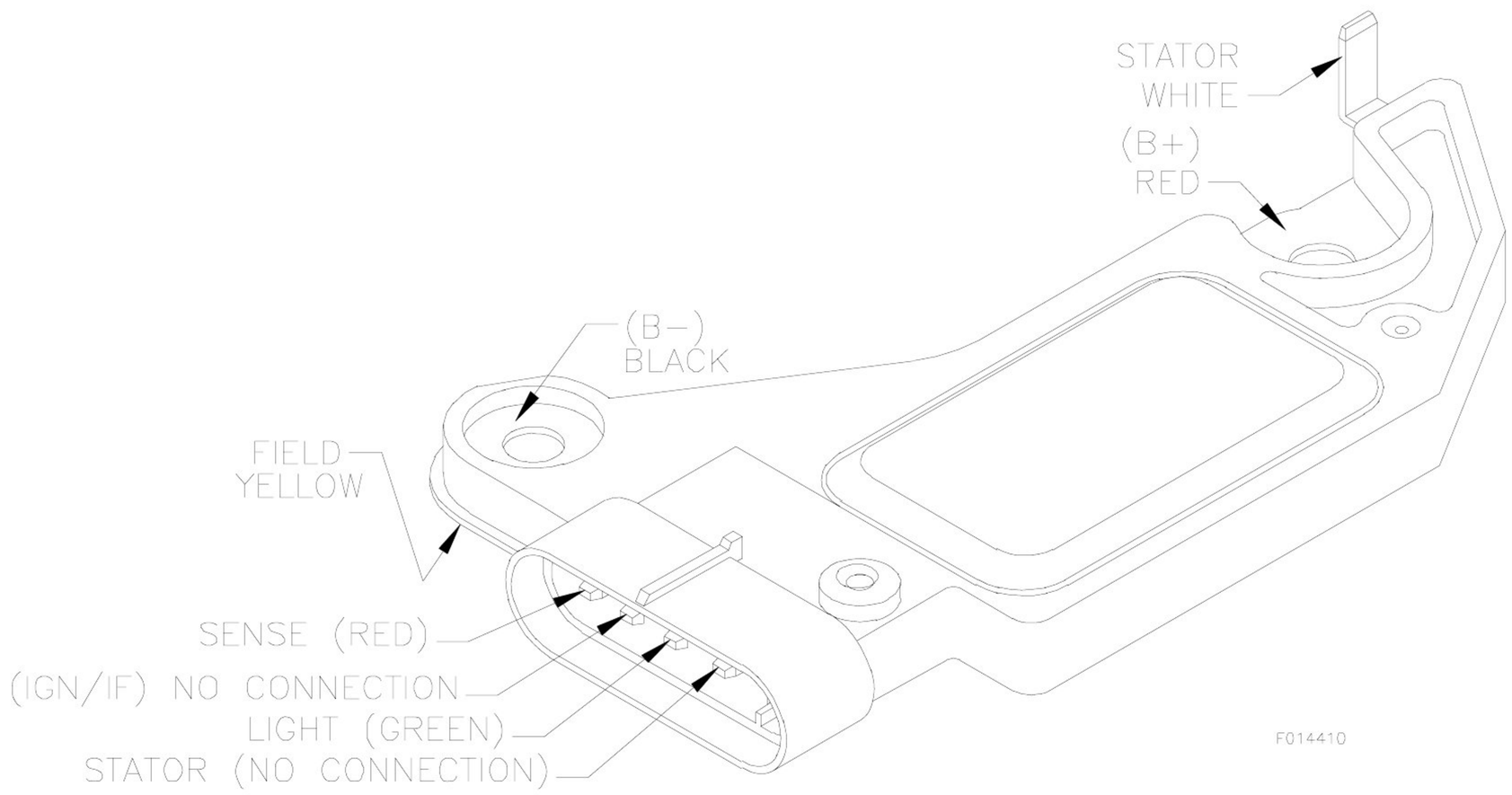

TRANSPO TESTER INSTRUCTIONS

for DELCO type regulators

PART NO.	FLD	VOLT	SET POINT	PART NO.	FLD	VOLT	SET POINT
DE708	**B**	**12**	**14.8**				

1. POWER OFF: Set "Voltage Range" and "FLD" switches to desired setting. Connect the voltage regulator as indicated in the diagram below.

2. POWER ON: Field lamp should blink and meter will indicate approximately the set point voltage indicated in the above table.

3. ADDITIONAL TEST: Remove "White" test lead from "Stator" lamp will come on and voltage will go to 12 volts.
Reconnect "White" test Lead.
Remove "Green" Lead from "Light" terminal regulator will go to 12 volts and "Field" light will stop blinking.

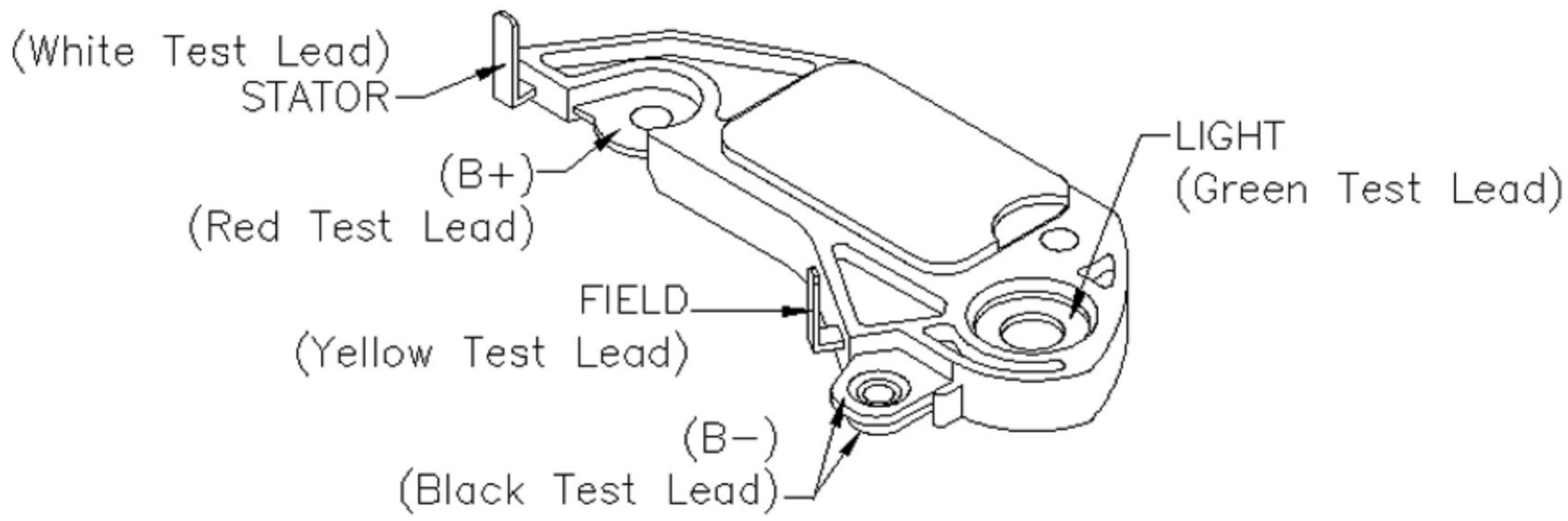

TRANSPO TESTER INSTRUCTIONS

for DELCO STAR II & STAR type regulators

PART NO.	FLD	VOLT	SET POINT	PART NO.	FLD	VOLT	SET POINT
D7010	**B**	**6**	**7.8**	**D7014**	**B**	**12**	**14.2**
D7011	**B**	**6**	**7.8**	**D7015**	**B**	**24**	**27.5**
D7012	**B**	**8**	**9.6**	**D7016**	**B**	**24**	**27.5**
D7013	**B**	**12**	**14.2**	**D7041**	**B**	**6**	**7.8**

1. POWER OFF: Set "Voltage Range" and "FLD" switches to desired setting. Connect the voltage regulator as indicated in the diagram below.

2. POWER ON: Field lamp should blink and meter will indicate approximately the set point voltage indicated in the above table.

3. ADDITIONAL TEST: Disconnect white test lead (Stator) from regulator's yellow wire. Field lamp should turn "OFF" and the meter will indicate the original voltage range in step one.
Note: Indicator light will turn "ON" on part numbers: D7011, D7014, D7016, D7041.

Regulator Wire Color	Test Lead Color	Function
Red	Red	Battery Positive
Black	Black	Battery Negative
Green	Yellow	Field
Yellow	White	Stator
Orange	Green	Indicator Light (if applicable)

NOTE: Transpo's standard voltage regulator tester offers 12, 24, and 32 volts. However, we also offer testers with additional 6 and 8 volt ranges .

TRANSPO TESTER INSTRUCTIONS

for DELCO STAR II & STAR type regulators

PART NO.	FLD	VOLT	SET POINT	PART NO.	FLD	VOLT	SET POINT
D7044	**B**	**12**	**14.7**	**D7023**	**B**	**12**	**14.2**
D7020	**B**	**6**	**7.8**	**D7024**	**B**	**12**	**14.2**
D7021	**B**	**6**	**7.8**	**D7025**	**B**	**24**	**27.5**
D7022	**B**	**8**	**9.6**	**D7026**	**B**	**24**	**27.5**

1. POWER OFF: Set "Voltage Range" and "FLD" switches to desired setting. Connect the voltage regulator as indicated in the diagram below.

2. POWER ON: Field lamp should blink and meter will indicate approximately the set point voltage indicated in the above table.

3. ADDITIONAL TEST: Disconnect white test lead (Stator) from regulator's yellow wire. Field lamp should turn "OFF" and the meter will indicate the original voltage range in step one.
Note: Indicator light will turn "ON" on part numbers: D7044, D7021, D7024, D7026.

Regulator Wire Color	Test Lead Color	Function
Red	Red	Battery Positive
Black	Black	Battery Negative
Green	Yellow	Field
Yellow	White	Stator
Orange	Green	Indicator Light (if applicable)

NOTE: Transpo's standard voltage regulator tester offers 12, 24, and 32 volts. However, we also offer testers with additional 6 and 8 volt ranges .

TRANSPO TESTER INSTRUCTIONS

for DELCO STAR II & STAR type regulators

PART NO.	FLD	VOLT	SET POINT	PART NO.	FLD	VOLT	SET POINT
D7027	**B**	**32**	**37.5**				
D7046	**B**	**24**	**27.5**				
	B						

1. POWER OFF: Set "Voltage Range" and "FLD" switches to desired setting. Connect the voltage regulator as indicated in the diagram below.

2. POWER ON: Field lamp should blink and meter will indicate approximately the set point voltage indicated in the above table.

3. ADDITIONAL TEST: Disconnect white test lead (Stator) from regulator's yellow wire. Field lamp should turn "OFF" and the meter will indicate the original voltage range in step one.

Regulator Wire Color	Test Lead Color	Function
Red	Red	Battery Positive
Black	Black	Battery Negative
Green	Yellow	Field
Yellow	White	Stator
Orange	Green	Indicator Light (if applicable)

NOTE: Transpo's standard voltage regulator tester offers 12, 24, and 32 volts. However, we also offer testers with additional 6 and 8 volt ranges .

TRANSPO TESTER INSTRUCTIONS

for DUCELLIER type regulators

PART NO.	FLD	VOLT	SET POINT	PART NO.	FLD	VOLT	SET POINT
ID1006	**A**	**12**	**14.3**				
ID1010	**A**	**12**	**14.3**				

1. POWER OFF: Set "Voltage Range" and "FLD" switches to desired setting. Connect the voltage regulator as indicated in the diagram below.

2. POWER ON: Field lamp should blink and meter will indicate approximately the set point voltage indicated in the above table.

3. ADDITIONAL TEST: Remove red test lead from the blue wire of the regulator. Indicator light should turn on and the meter will still indicate the set point voltage.

Using VRC1000: To check for over Voltage, push the "Over Voltage" switch and the "Lamp Indicator" will turn on between 16.0V and 17.1V.

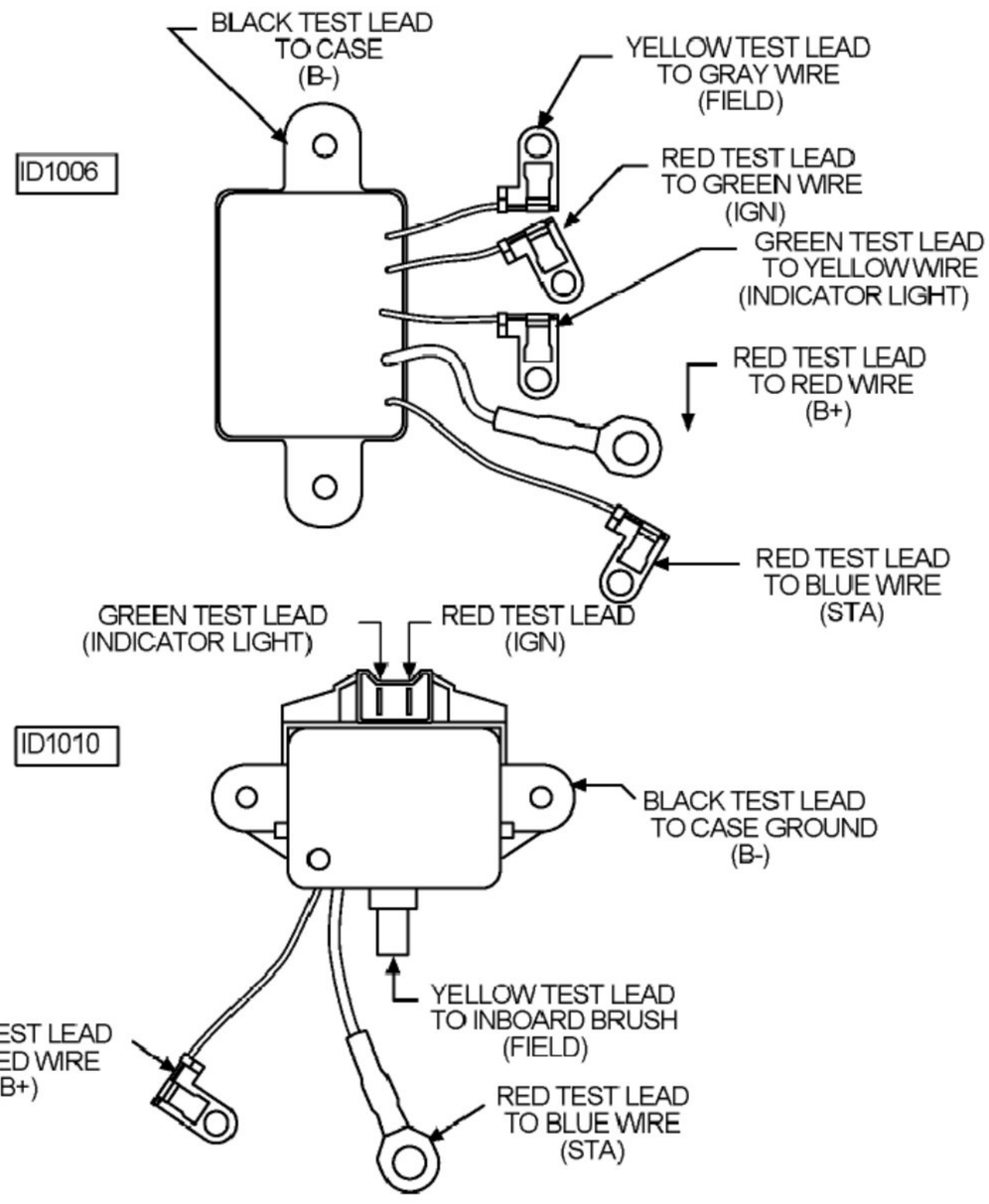

TRANSPO TESTER INSTRUCTIONS

for DUCELLIER type regulators

PART NO.	FLD	VOLT	SET POINT	PART NO.	FLD	VOLT	SET POINT
ID4009	**B**	**12**	**14.2**				
ID4009-1	**B**	**12**	**15**				

1. POWER OFF: Set "Voltage Range" and "FLD" switches to desired setting. Connect the voltage regulator as indicated in the diagram below.

2. POWER ON: Field lamp should blink and meter will indicate approximately the set point voltage indicated in the above table.

3. ADDITIONAL TEST:

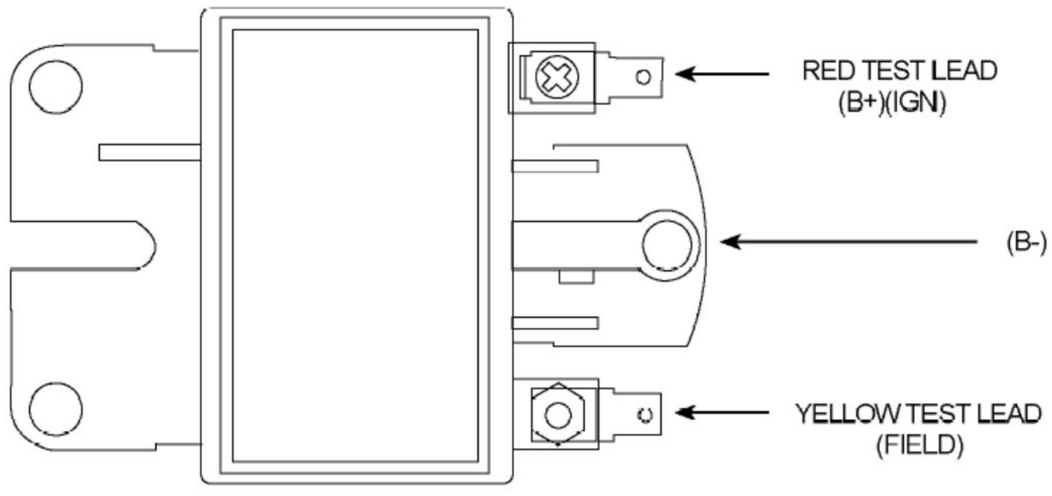

TRANSPO TESTER INSTRUCTIONS

for DUCELLIER type regulators

PART NO.	FLD	VOLT	SET POINT	PART NO.	FLD	VOLT	SET POINT
ID1015	**A**	**12**	**14.3**				

1. POWER OFF: Set "Voltage Range" and "FLD" switches to desired setting. Connect the voltage regulator as indicated in the diagram below.

2. POWER ON: Field lamp should blink and meter will indicate approximately the set point voltage indicated in the above table.

3. ADDITIONAL TEST:

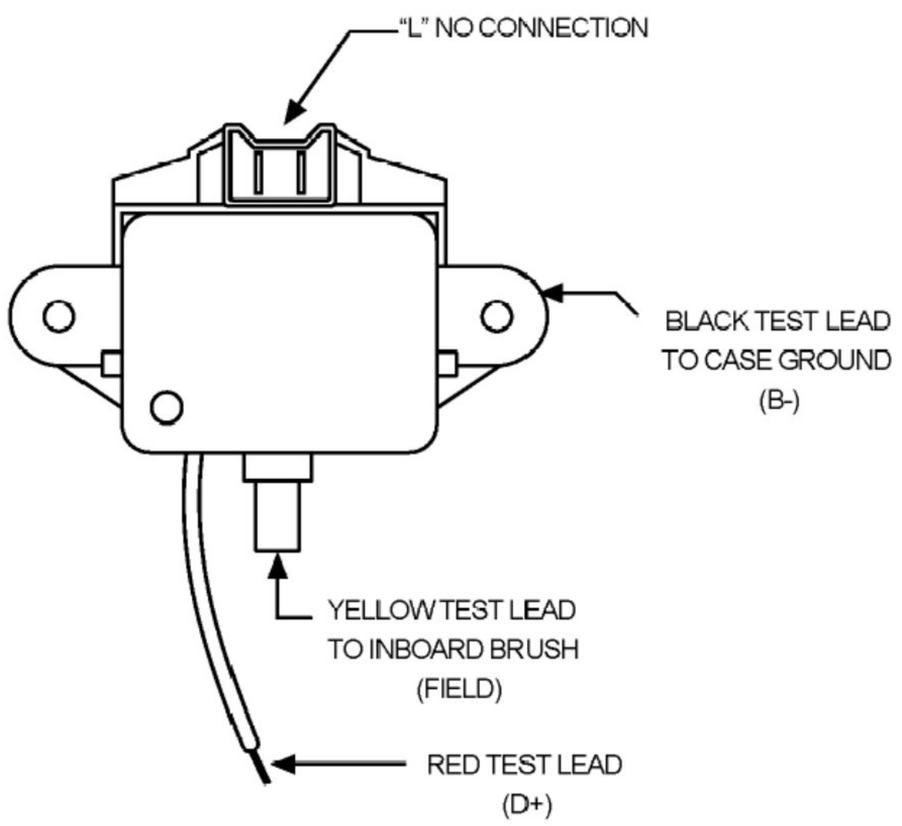

TRANSPO TESTER INSTRUCTIONS

for DUCELLIER type regulators

PART NO.	FLD	VOLT	SET POINT	PART NO.	FLD	VOLT	SET POINT
ID1004	**A**	**14**	**14.3**				
ID1016	**A**	**14**	**14.4**				

1. POWER OFF: Set "Voltage Range" and "FLD" switches to desired setting. Connect the voltage regulator as indicated in the diagram below.

2. POWER ON: Field lamp should blink and meter will indicate approximately the set point voltage indicated in the above table.

3. ADDITIONAL TEST: Disconnect red test lead from stator(blue) wire indicator lamp will come on regulator will continue to read 14.4/14.5 volts. Reconnect stator lead and lamp will go out.

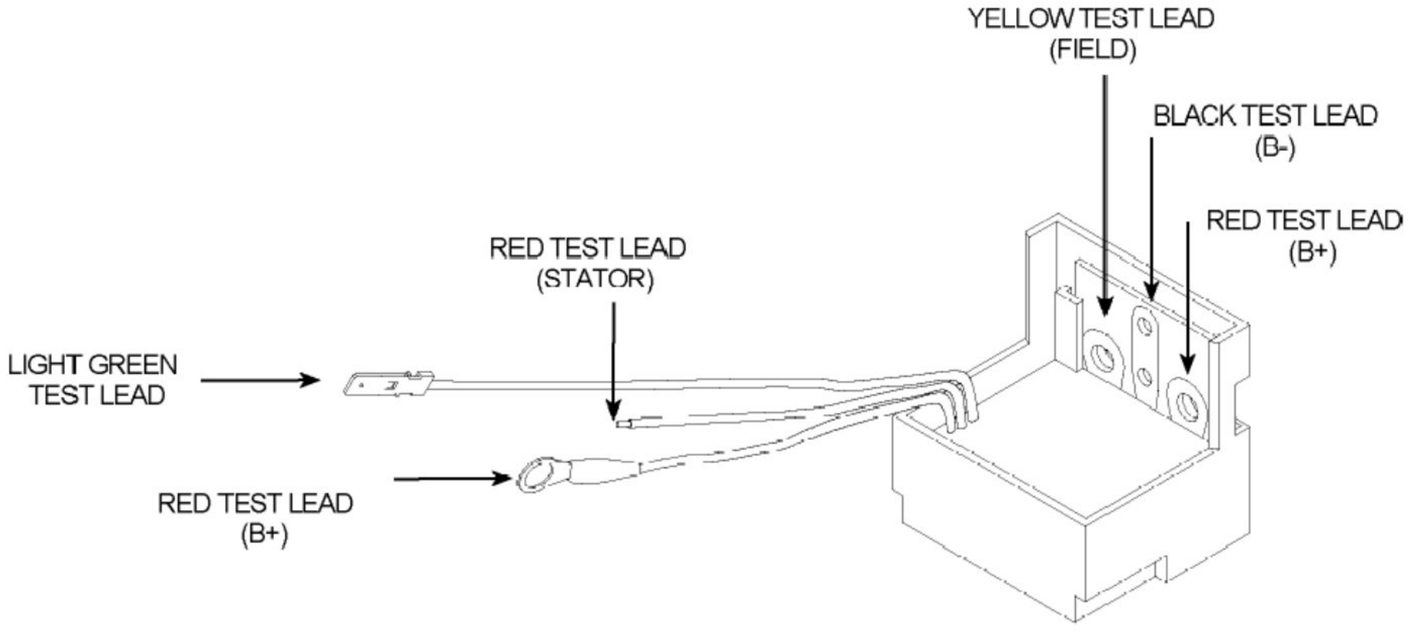

TRANSPO TESTER INSTRUCTIONS

for DUCELLIER type regulators

PART NO.	FLD	VOLT	SET POINT	PART NO.	FLD	VOLT	SET POINT
ID1007	**A**	**12**	**14.4**				

1. POWER OFF: Set "Voltage Range" and "FLD" switches to desired setting. Connect the voltage regulator as indicated in the diagram below.

2. POWER ON: Field lamp should blink and meter will indicate approximately the set point voltage indicated in the above table.

3. ADDITIONAL TEST: Disconnect red test lead from stator (blue) wire indicator lamp will come on regulator will continue to read 14.4/14.5 volts. Reconnect stator lead and lamp will go out.

Using VRC1000: To check for over Voltage, push the "Over Voltage" switch and the "Lamp Indicator" will turn on between 16.0V and 17.1V.

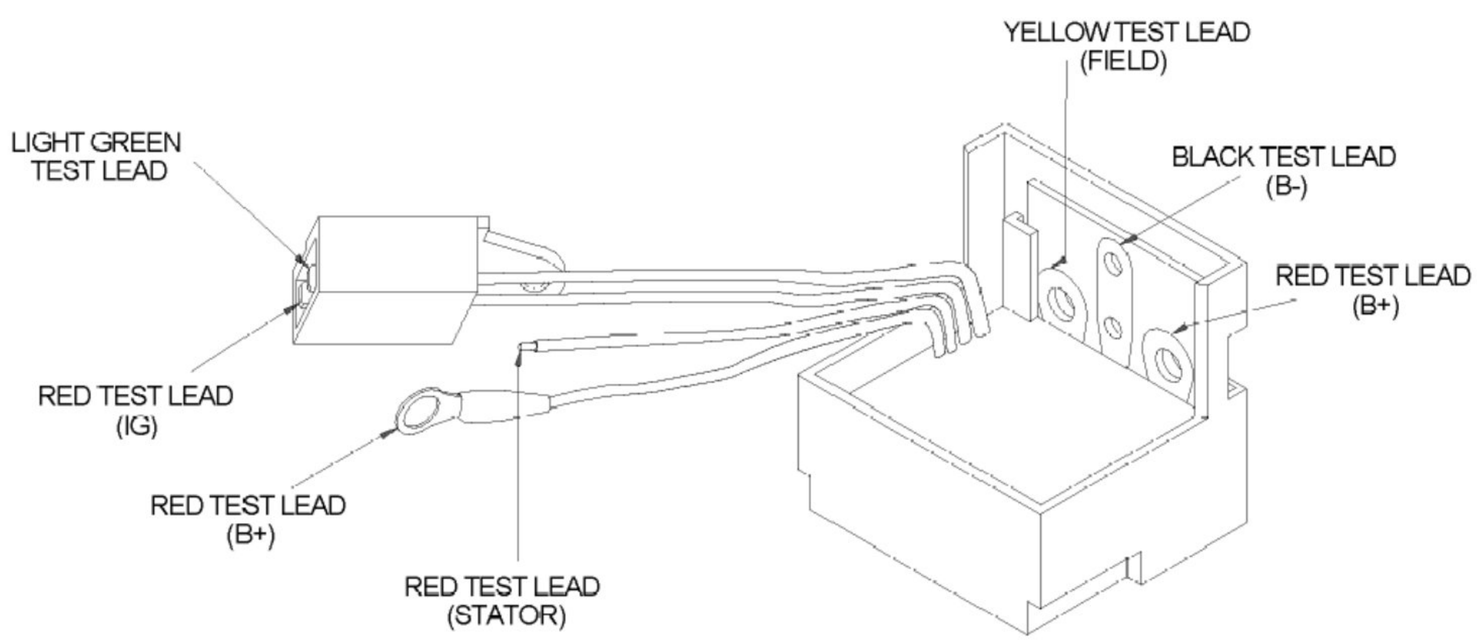

TRANSPO TESTER INSTRUCTIONS

for DUCELLIER type regulators

PART NO.	FLD	VOLT	SET POINT	PART NO.	FLD	VOLT	SET POINT
ID1011	**A**	**12**	**14.4**				

1. POWER OFF: Set "Voltage Range" and "FLD" switches to desired setting. Connect the voltage regulator as indicated in the diagram below.

2. POWER ON: Field lamp should blink and meter will indicate approximately the set point voltage indicated in the above table.

3. ADDITIONAL TEST: Disconnect red test lead from stator (blue) wire indicator lamp will come on regulator will continue to read 14.4/14.5 volts. Reconnect stator lead and lamp will go out.

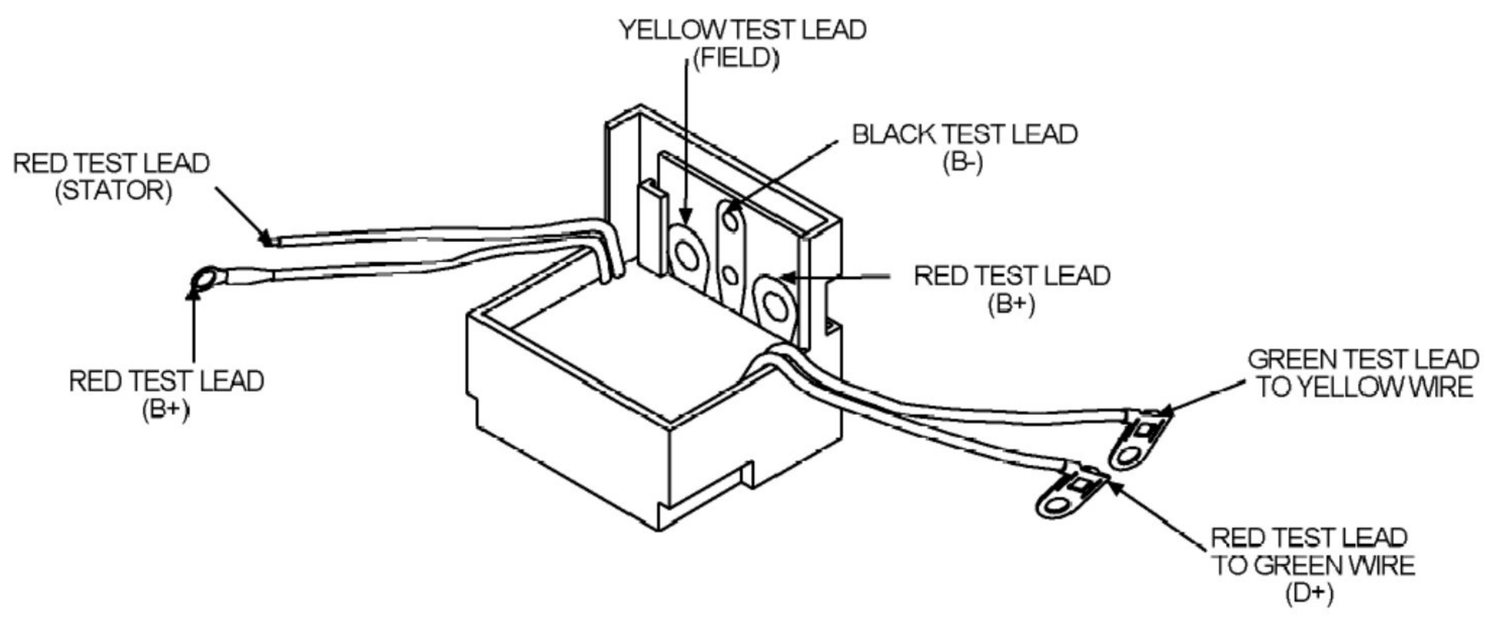

TRANSPO TESTER INSTRUCTIONS

for DUCELLIER type regulators

PART NO.	FLD	VOLT	SET POINT	PART NO.	FLD	VOLT	SET POINT
ID1018	**A**	**12**	**14.4**				

1. POWER OFF: Set "Voltage Range" and "FLD" switches to desired setting. Connect the voltage regulator as indicated in the diagram below.

2. POWER ON: Field lamp should blink and meter will indicate approximately the set point voltage indicated in the above table.

3. ADDITIONAL TEST: Remove red test lead from the blue wire of the regulator. Indicator light should turn on the meter will still indicate the set point voltage.

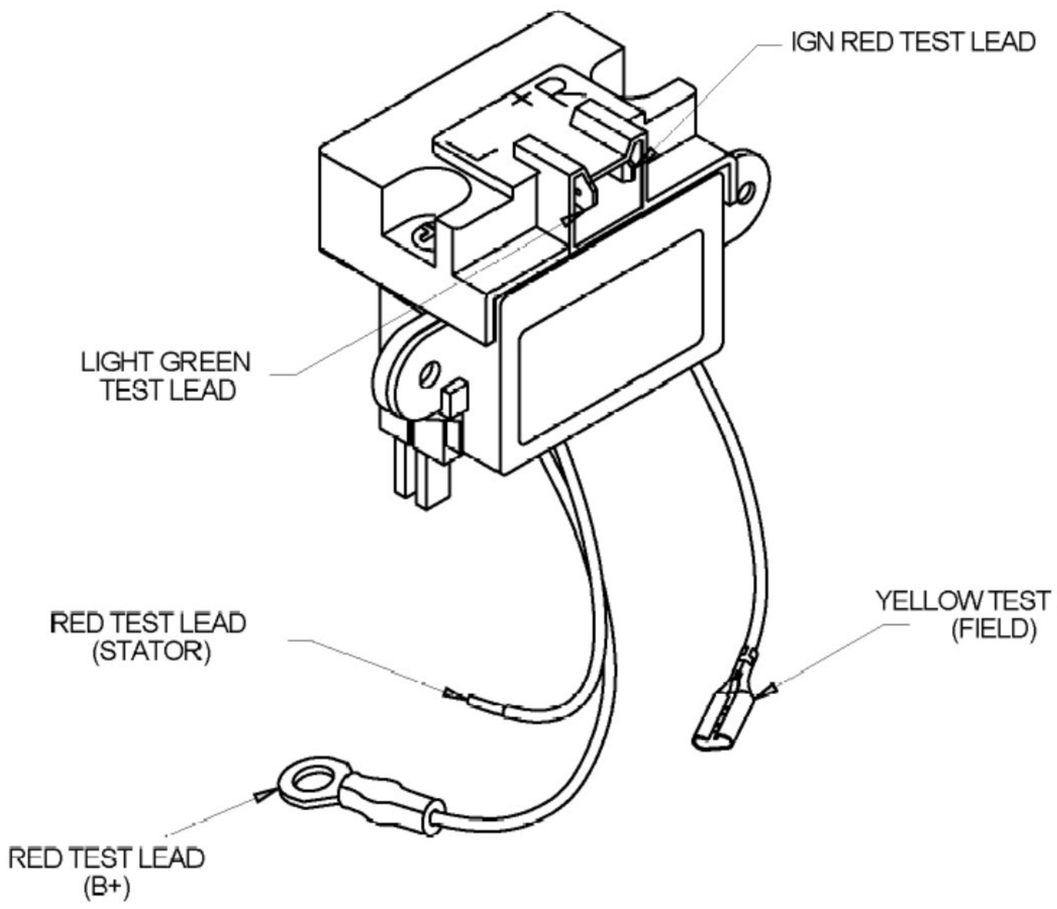

TRANSPO TESTER INSTRUCTIONS

for ELECTRODYNE type regulators

PART NO.	FLD	VOLT	SET POINT	PART NO.	FLD	VOLT	SET POINT
E40060	**A**	**12**	**14.2**				
E40070	**A**	**24**	**27.5**				
E40080	**A**	**32**	**37.5**				

1. POWER OFF: Set "Voltage Range" and "FLD" switches to desired setting. Connect the voltage regulator as indicated in the diagram below.

2. POWER ON: Field lamp should blink and meter will indicate approximately the set point voltage indicated in the above table.

3. ADDITIONAL TEST: Repeat test for each of the regulator's white leads, Results will be the same.

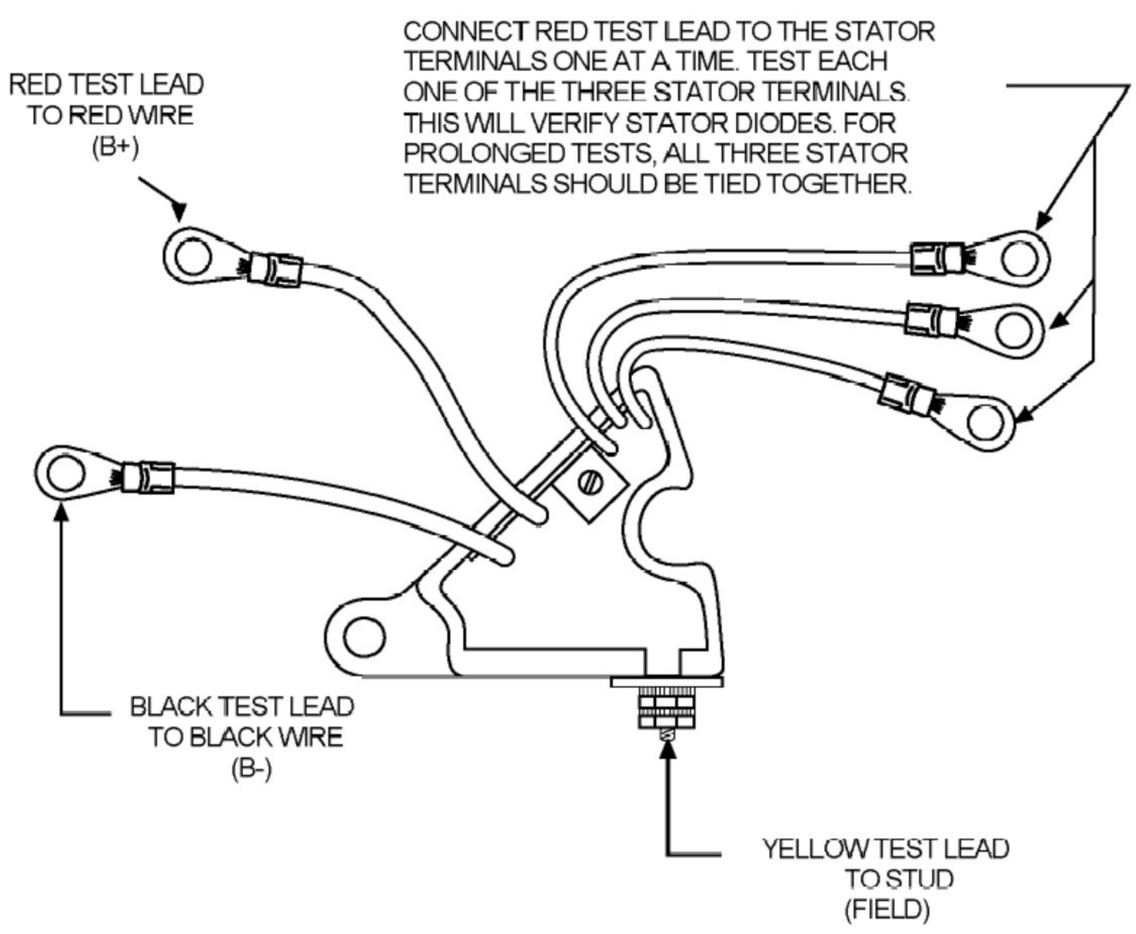

TRANSPO TESTER INSTRUCTIONS

for ELECTRODYNE type regulators

PART NO.	FLD	VOLT	SET POINT	PART NO.	FLD	VOLT	SET POINT
E7026HD	**A**	**24**	**27.5**				
E7069HD	**A**	**12**	**14.2**				

1. POWER OFF: Set "Voltage Range" and "FLD" switches to desired setting. Connect the voltage regulator as indicated in the diagram below.

2. POWER ON: Field lamp should blink and meter will indicate approximately the set point voltage indicated in the above table.

3. ADDITIONAL TEST: Remove red test lead from terminal marked "IGN". Field lamp should turn off and the meter will indicate low voltage.

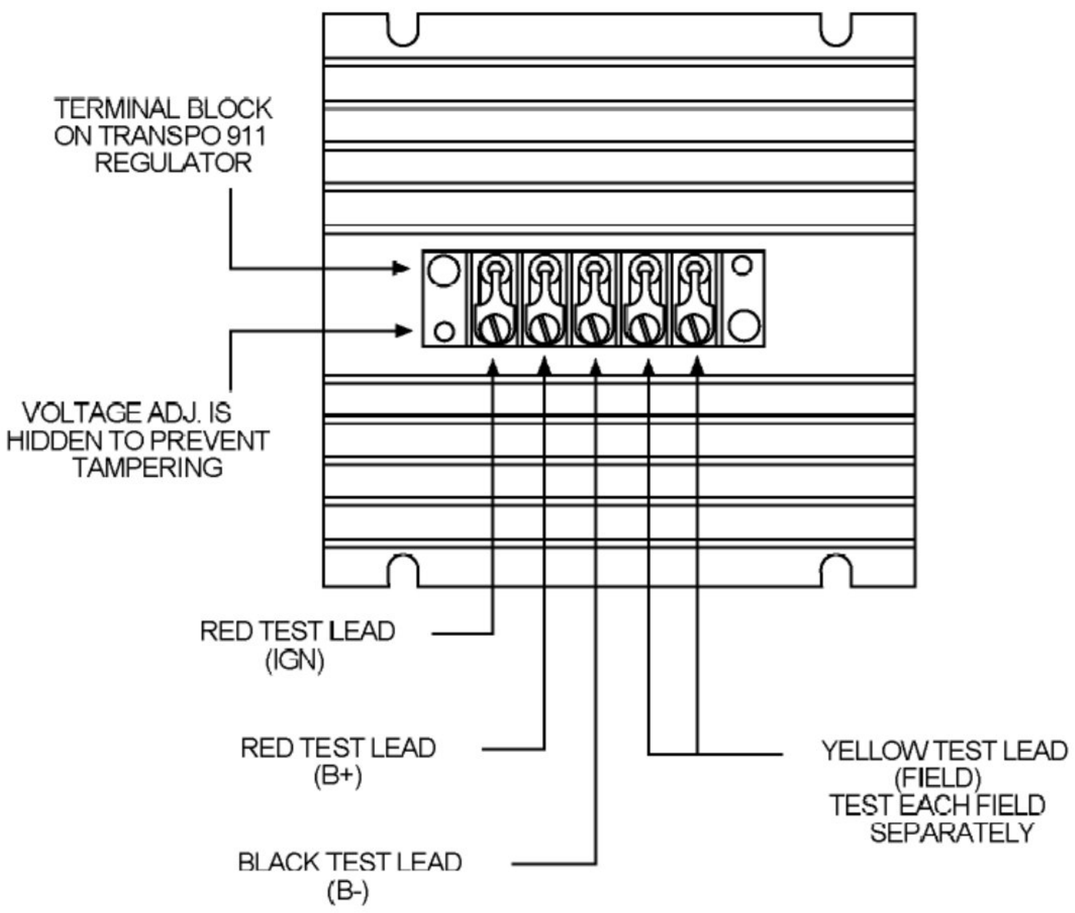

TRANSPO TESTER INSTRUCTIONS

for ELECTRODYNE type regulators

PART NO.	FLD	VOLT	SET POINT	PART NO.	FLD	VOLT	SET POINT
E60040	**A**	**12**	**14.2**				
E60050	**A**	**24**	**27.5**				
E60030	**A**	**32**	**37.5**				

1. POWER OFF: Set "Voltage Range" and "FLD" switches to desired setting. Connect the voltage regulator as indicated in the diagram below.

2. POWER ON: Field lamp should blink and meter will indicate approximately the set point voltage indicated in the above table.

3. ADDITIONAL TEST: Repeat test for each of the regulator's white leads, Results will be the same.

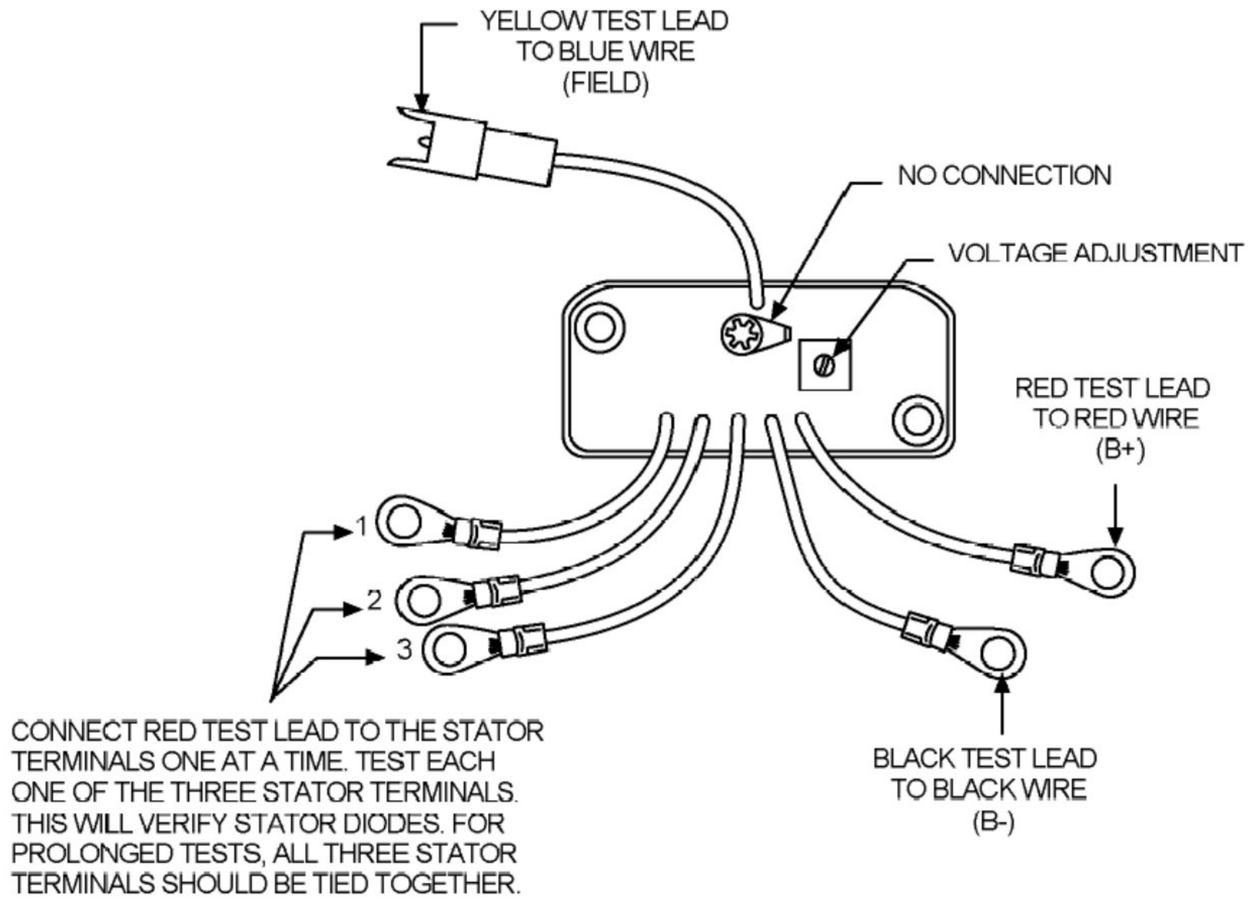

TRANSPO TESTER INSTRUCTIONS

for ELECTRODYNE type regulators

PART NO.	FLD	VOLT	SET POINT	PART NO.	FLD	VOLT	SET POINT
E70260	**A**	**24**	**27.5**				
E70690	**A**	**12**	**14.2**				

1. POWER OFF: Set "Voltage Range" and "FLD" switches to desired setting. Connect the voltage regulator as indicated in the diagram below.

2. POWER ON: Field lamp should blink and meter will indicate approximately the set point voltage indicated in the above table.

3. ADDITIONAL TEST: Repeat test for each of the regulator's white leads. Disconnect yellow test lead from FLD #1 and repeat test on FLD # 2 . Results will be the same.

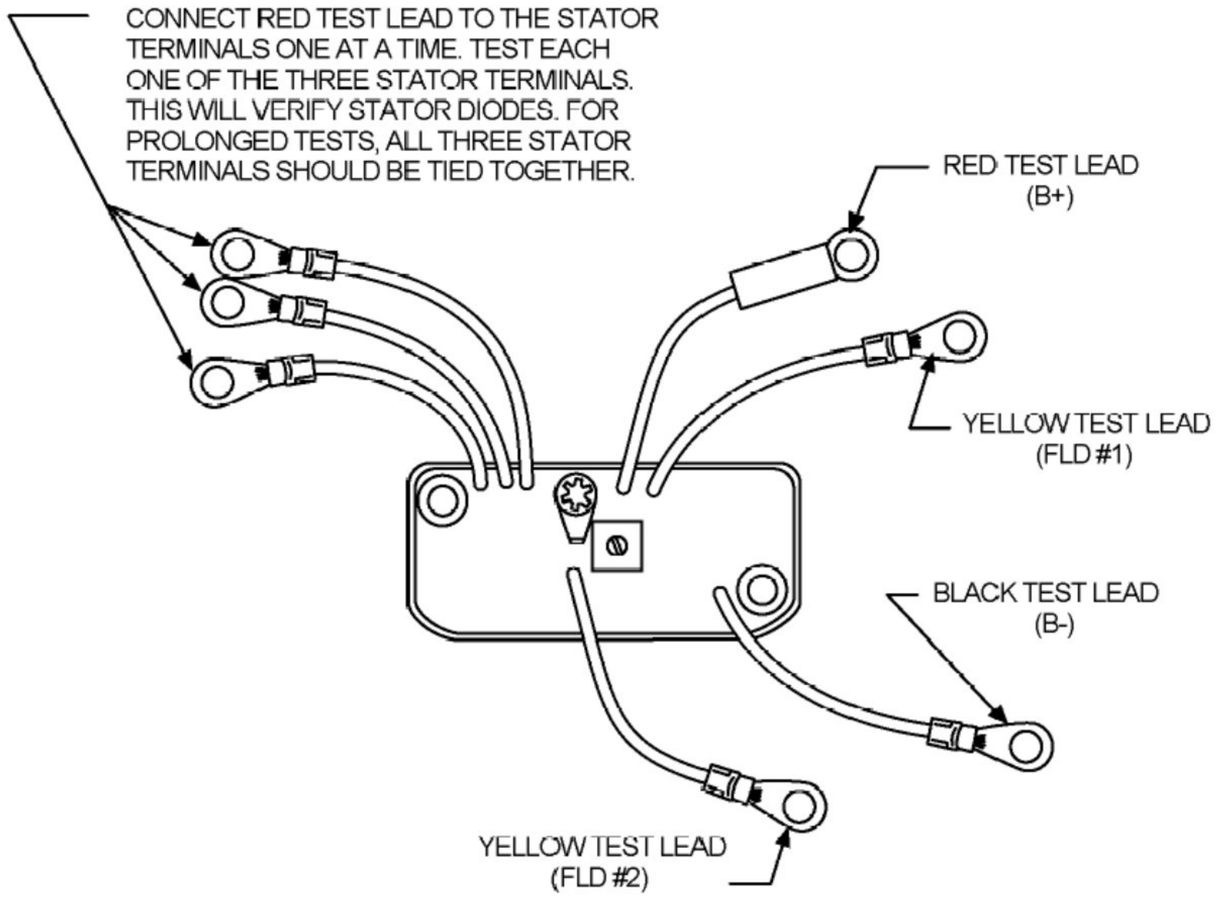

TRANSPO TESTER INSTRUCTIONS

for FEMSA type regulators

PART NO.	FLD	VOLT	SET POINT	PART NO.	FLD	VOLT	SET POINT
IF8603	**A**	**12**	**14.7**				
IF8607	**A**	**12**	**14.2**				

1. POWER OFF: Set "Voltage Range" and "FLD" switches to desired setting. Connect the voltage regulator as indicated in the diagram below.

2. POWER ON: Field lamp should blink and meter will indicate approximately the set point voltage indicated in the above table.

3. ADDITIONAL TEST:

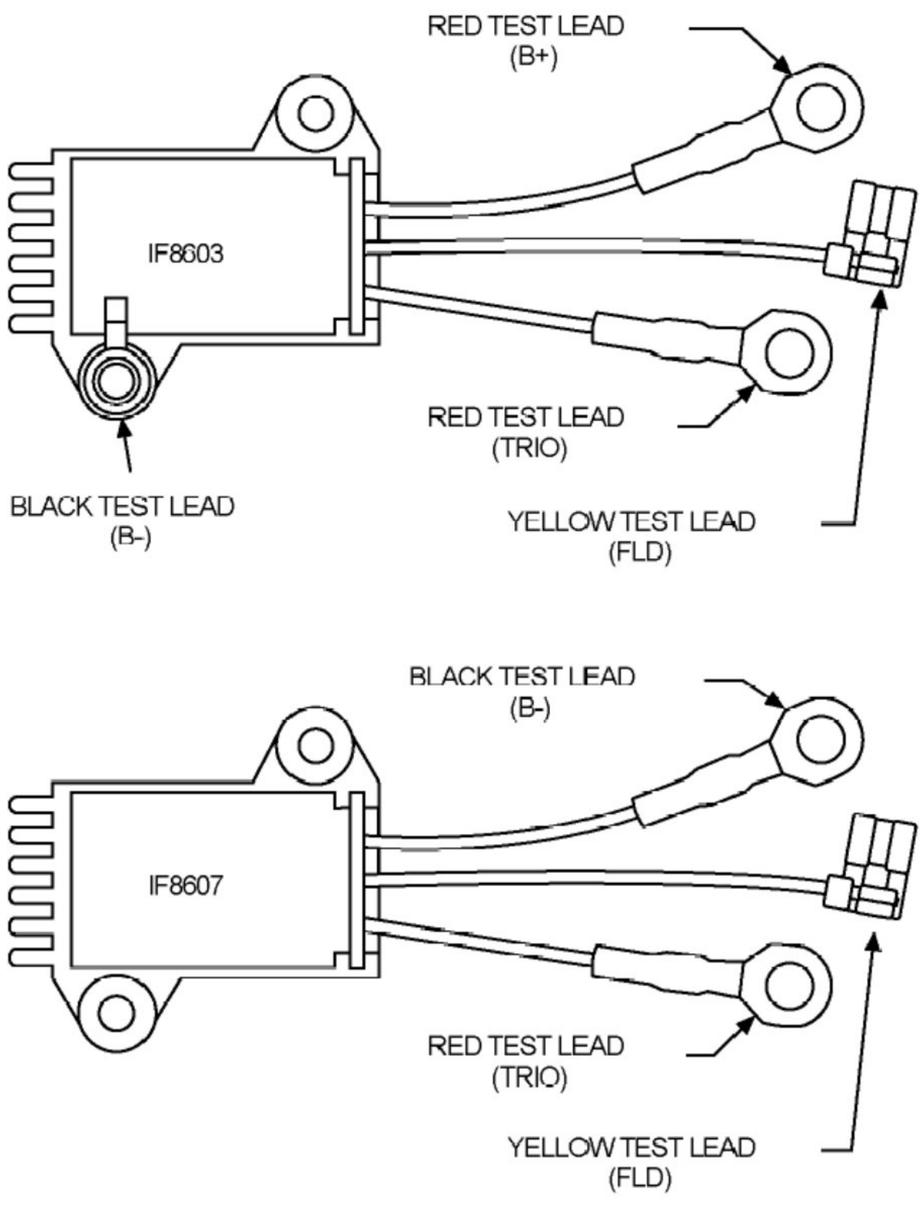

TRANSPO TESTER INSTRUCTIONS

for FEMSA type regulators

PART NO.	FLD	VOLT	SET POINT	PART NO.	FLD	VOLT	SET POINT
IF5442	**A**	**12**	**14.2**				

1. POWER OFF: Set "Voltage Range" and "FLD" switches to desired setting. Connect the voltage regulator as indicated in the diagram below.

2. POWER ON: Field lamp should blink and meter will indicate approximately the set point voltage indicated in the above table.

3. ADDITIONAL TEST: Remove red lead from terminal marked stator. Indicator light will come on, reconnect. Light shuts off.

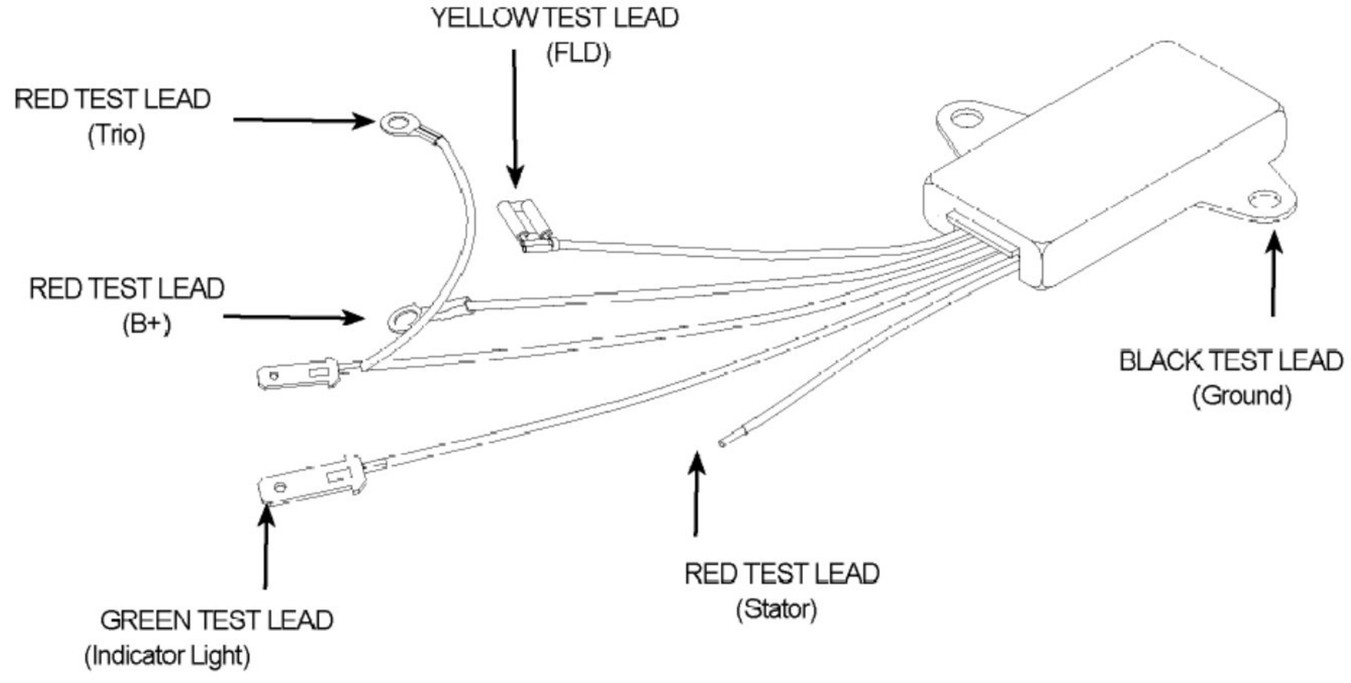

TRANSPO TESTER INSTRUCTIONS

for FEMSA type regulators

PART NO.	FLD	VOLT	SET POINT	PART NO.	FLD	VOLT	SET POINT
IF1692	**A**	**12**	**14.7**				

1. POWER OFF: Set "Voltage Range" and "FLD" switches to desired setting. Connect the voltage regulator as indicated in the diagram below.

2. POWER ON: Field lamp should blink and meter will indicate approximately the set point voltage indicated in the above table.

3. ADDITIONAL TEST:

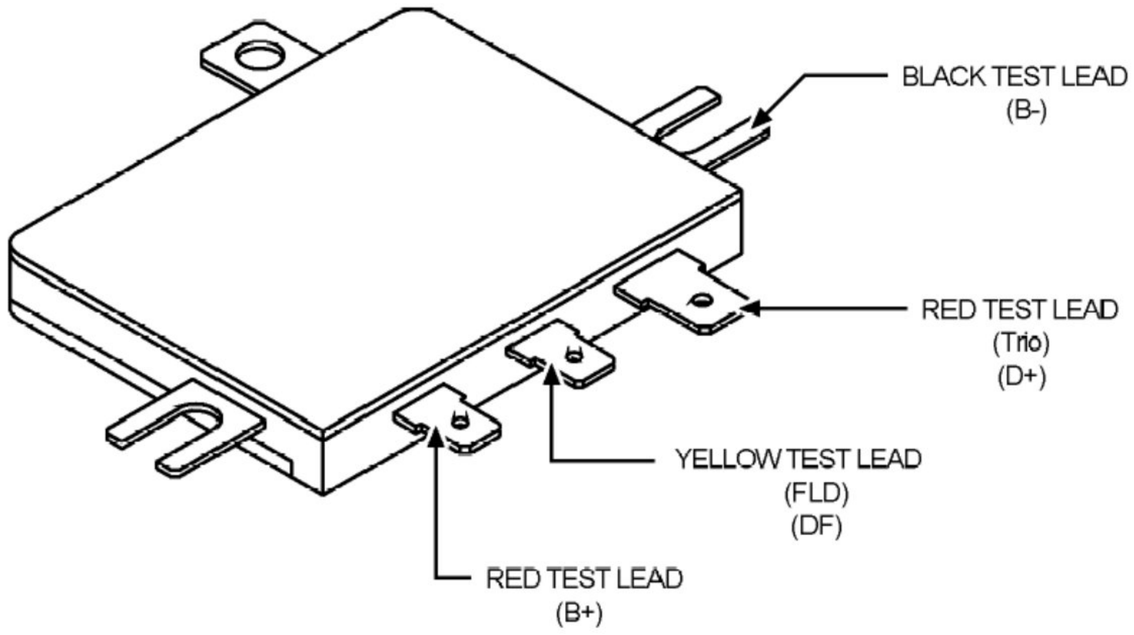

TRANSPO TESTER INSTRUCTIONS

for FORD type regulators

PART NO.	FLD	VOLT	SET POINT	PART NO.	FLD	VOLT	SET POINT
F540	**B**	**12**	**14.3**	**F540SP**	**B**	**12**	**14.2**
F540HD	**B**	**12**	**14.2**	**F540XHD**	**B**	**12**	**14.2**
F540S	**B**	**12**	**14.3**	**F782**	**B**	**12**	**14.2**
F540SLD	**B**	**12**	**14.2**	**F783**	**B**	**12**	**14.3**

1. POWER OFF: Set "Voltage Range" and "FLD" switches to desired setting. Connect the voltage regulator as indicated in the diagram below.

2. POWER ON: Field lamp should blink and meter will indicate approximately the set point voltage indicated in the above table.

3. ADDITIONAL TEST: Remove red lead from terminal marked "S". Indicator light should turn on and meter will still indicate set point voltage. Removal of test lead from "S" and "I" terminal will result in the field lamp turning off and the meter reading 12V. On Mechanical type regulators (F8512M), the "short circuit" light will also turn on due to the regulator's internal circuitry. Limit this test to a short time.

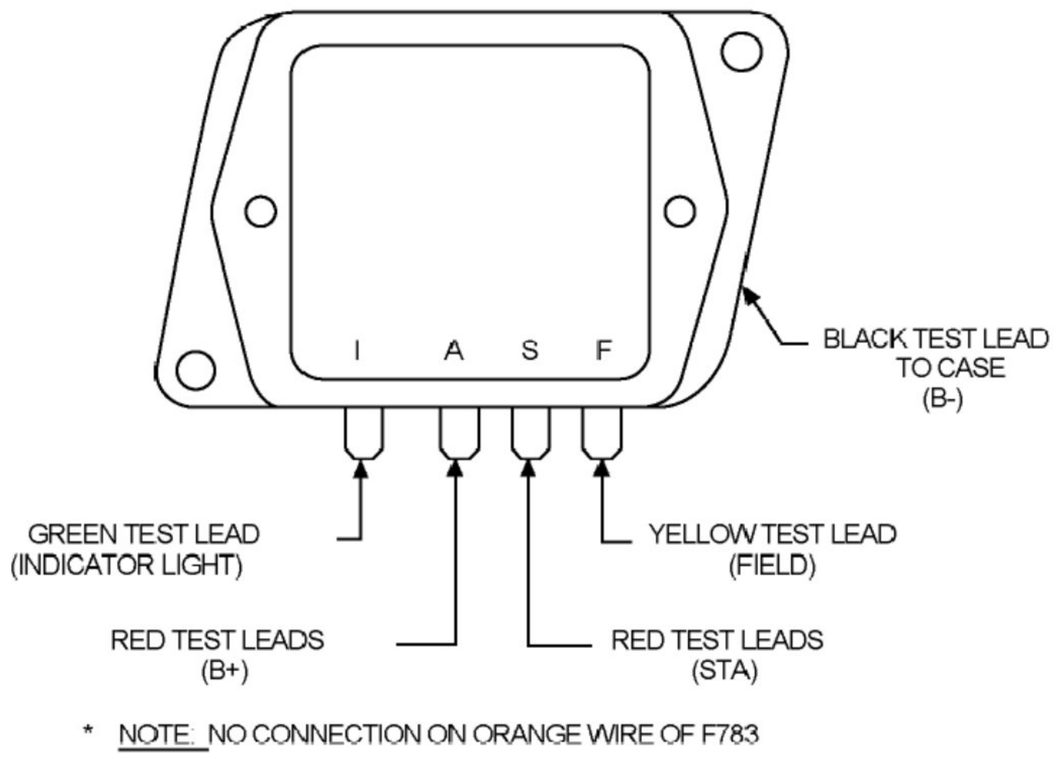

* NOTE: NO CONNECTION ON ORANGE WIRE OF F783

TRANSPO TESTER INSTRUCTIONS

for FORD type regulators

PART NO.	FLD	VOLT	SET POINT	PART NO.	FLD	VOLT	SET POINT
F8512	**B**	**12**	**14.2**				
F8512M	**B**	**12**	**14.3**				
F8512S	**B**	**12**	**14.2**				

1. POWER OFF: Set "Voltage Range" and "FLD" switches to desired setting. Connect the voltage regulator as indicated in the diagram below.

2. POWER ON: Field lamp should blink and meter will indicate approximately the set point voltage indicated in the above table.

3. ADDITIONAL TEST: Remove red test lead from terminal marked "S". Indicator light should turn on meter will still indicate set point voltage. Removal of test lead from "S" and "I" terminal will result in the field lamp turning off and the meter reading 12v. On mechanical type on due to the regulator's internal circuitry. Limit this test to a short time.

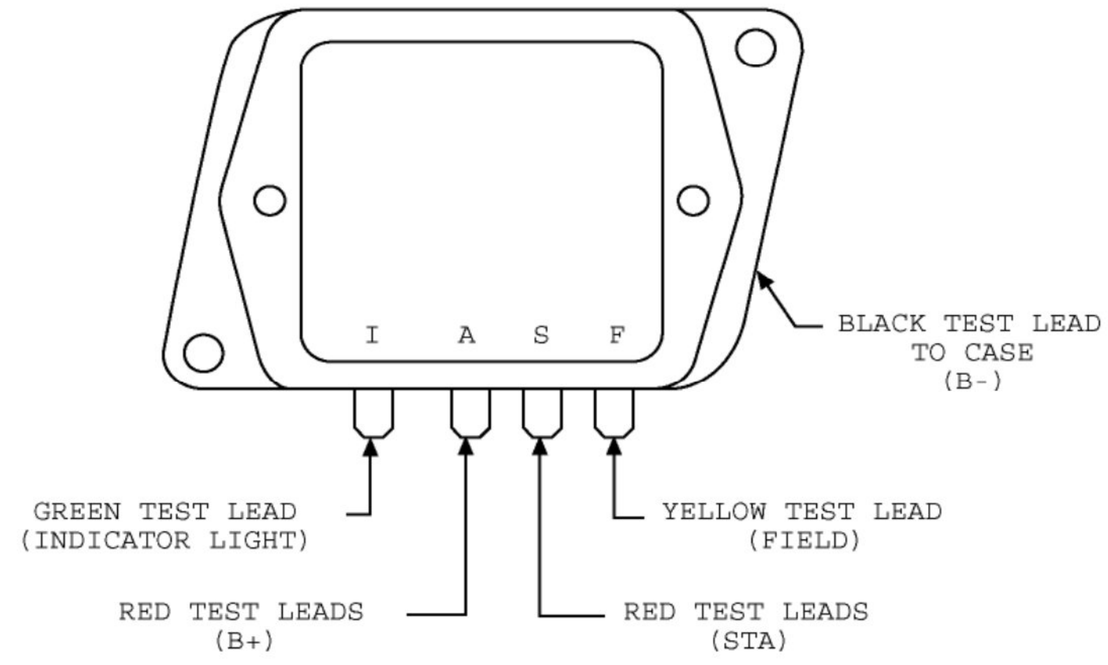

TRANSPO TESTER INSTRUCTIONS

for FORD type regulators

PART NO.	FLD	VOLT	SET POINT	PART NO.	FLD	VOLT	SET POINT
F784	**A**	**12**	**14.6**	**F785**	**A**	**12**	**14.6**
F784HD	**A**	**12**	**14.6**	**F786**	**A**	**12**	**14.6**
F794	**A**	**12**	**14.6**	**F794B**	**A**	**12**	**14.6**
F784B	**A**	**12**	**14.6**	**F795**	**A**	**12**	**14.6**

1. POWER OFF: Set "Voltage Range" and "FLD" switches to desired setting. Connect the voltage regulator as indicated in the diagram below.

2. POWER ON: Field lamp should blink and meter will indicate approximately the set point voltage indicated in the above table.

3. ADDITIONAL TEST: Remove red test lead from terminal marked "S". Indicator light should turn on and the meter will still indicate the set point voltage. Removal of test of leads from "S" and " I" will result in field lamp turning off and the meter reading 12V.

Using VRC1000: To check for over Voltage, push the "Over Voltage" switch and the "Lamp Indicator" will turn on between 16.0V and 17.1V.

NOTE: On Transpo's F786 & F795 connect white test lead to terminal marked "S".

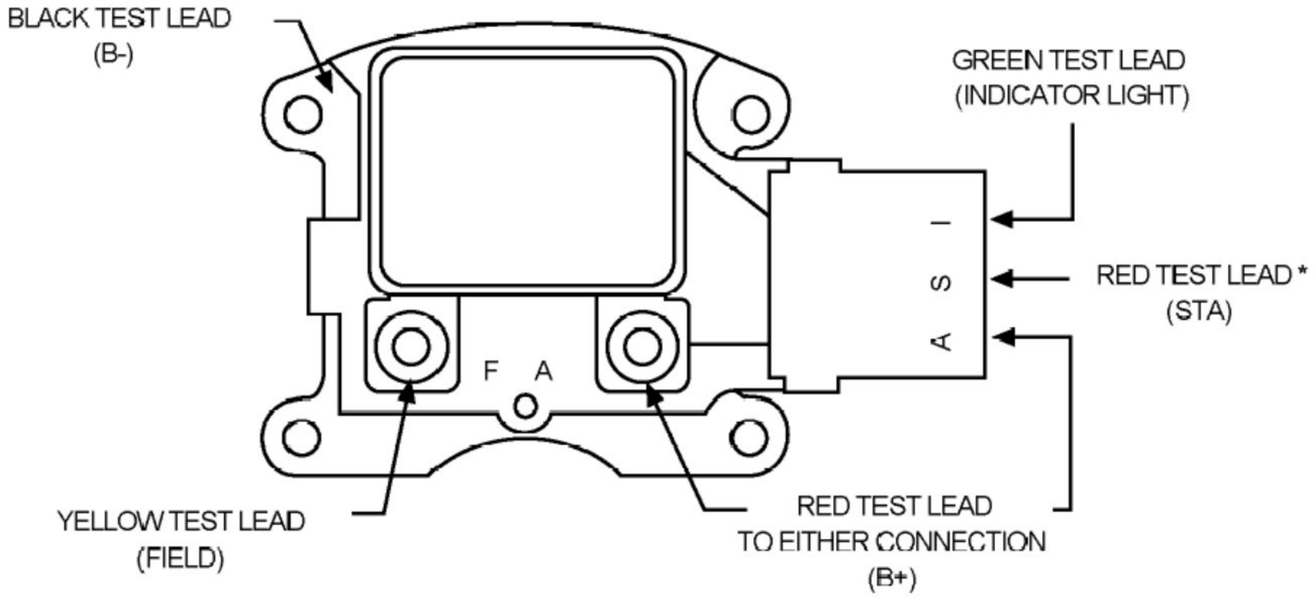

TRANSPO TESTER INSTRUCTIONS

for FORD type regulators

PART NO.	FLD	VOLT	SET POINT	PART NO.	FLD	VOLT	SET POINT
F374	**B**	**12**	**14.2**				

1. POWER OFF: Set "Voltage Range" and "FLD" switches to desired setting. Connect the voltage regulator as indicated in the diagram below.

2. POWER ON: Field lamp should blink and meter will indicate approximately the set point voltage indicated in the above table.

3. ADDITIONAL TEST:

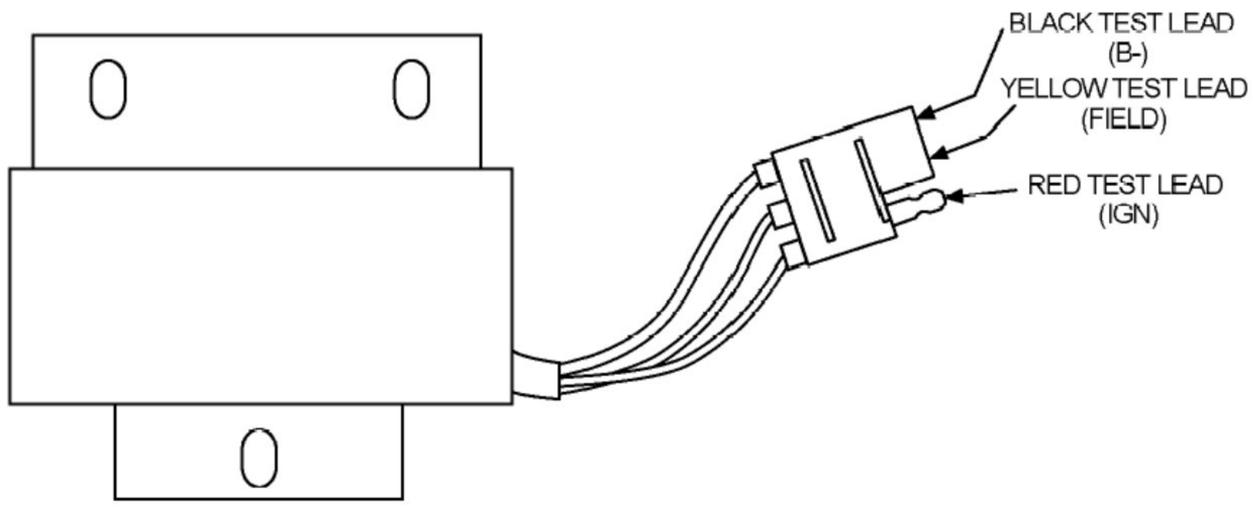

TRANSPO TESTER INSTRUCTIONS

for FORD type regulators

PART NO.	FLD	VOLT	SET POINT	PART NO.	FLD	VOLT	SET POINT
F733	**B**	**12**	**14.2**				
F733L	**B**	**12**	**14.2**				

1. POWER OFF: Set "Voltage Range" and "FLD" switches to desired setting. Connect the voltage regulator as indicated in the diagram below.

2. POWER ON: Field lamp should blink and meter will indicate approximately the set point voltage indicated in the above table.

3. ADDITIONAL TEST: Remove white test lead from terminal marked "stator". Field lamp should turn off and the meter will indicate low voltage. On F733L regulator, removal of white test lead will result in indicator light turning on.

* NOTE: No Yellow wire for F733

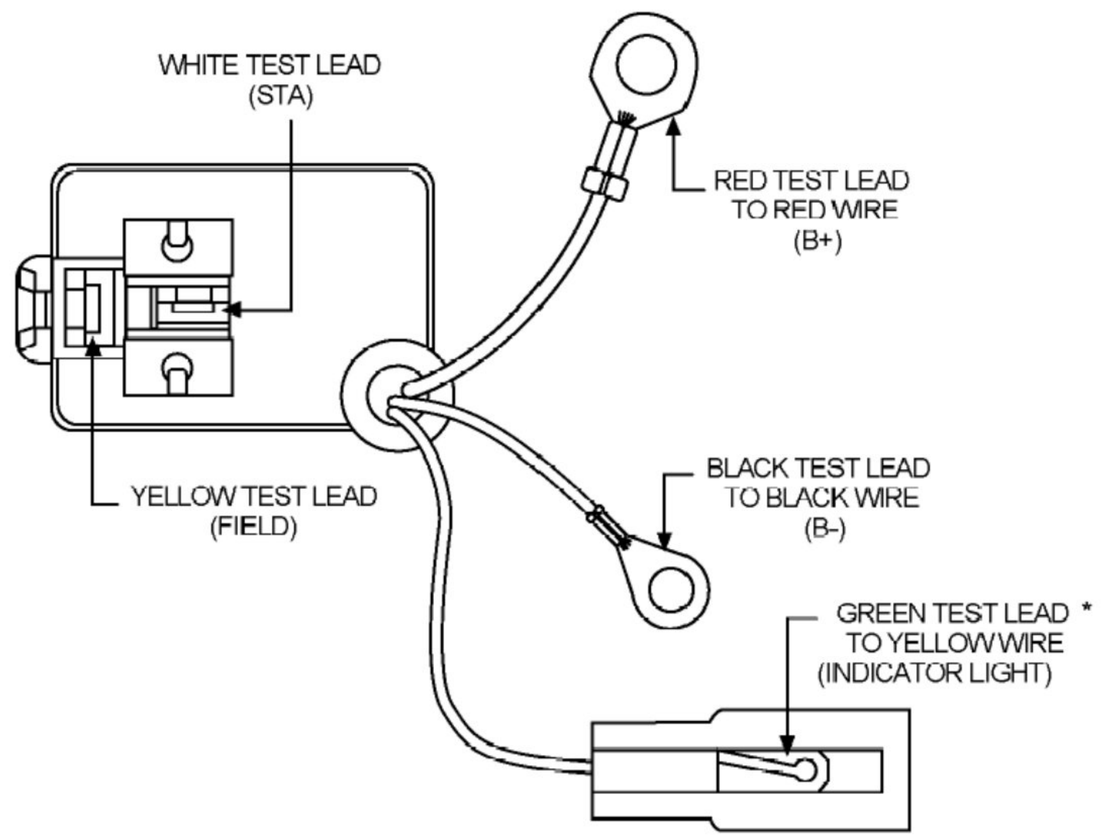

TRANSPO TESTER INSTRUCTIONS

for FORD type regulators

PART NO.	FLD	VOLT	SET POINT	PART NO.	FLD	VOLT	SET POINT
FB123	**B**	**12**	**14.2**				
FB303	**B**	**12**	**14.2**				
FB309	**B**	**12**	**14.2**				

1. POWER OFF: Set "Voltage Range" and "FLD" switches to desired setting. Connect the voltage regulator as indicated in the diagram below.

2. POWER ON: Field lamp should blink and meter will indicate approximately the set point voltage indicated in the above table.

3. ADDITIONAL TEST: Remove white test lead from blue wire of the regulator. Field lamp should turn off and the meter will indicate 12V.

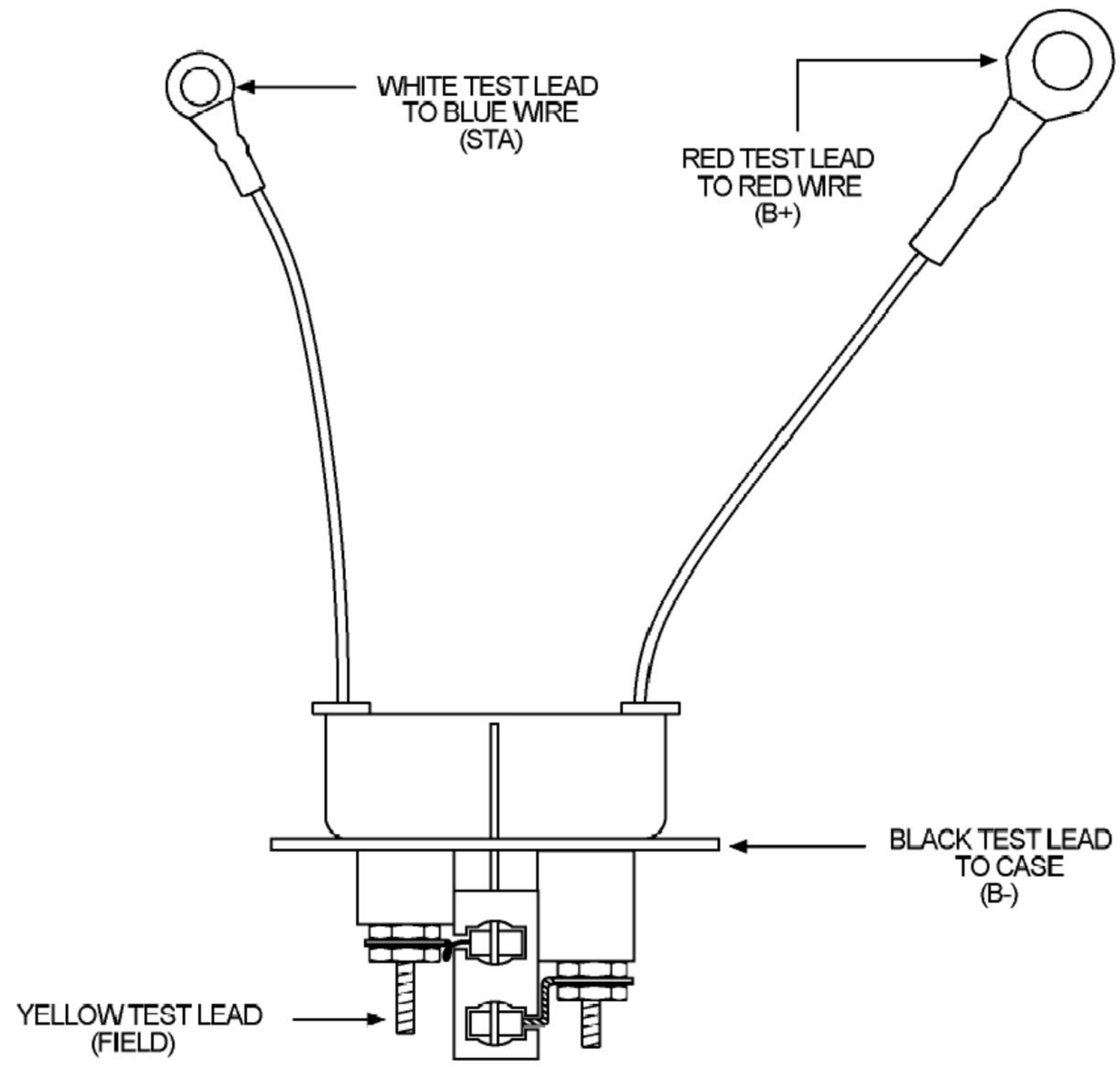

TRANSPO TESTER INSTRUCTIONS

for FORD type regulators

PART NO.	FLD	VOLT	SET POINT	PART NO.	FLD	VOLT	SET POINT
F7078	**B**	**12**	**14.2**				

1. POWER OFF: Set "Voltage Range" and "FLD" switches to desired setting. Connect the voltage regulator as indicated in the diagram below.

2. POWER ON: Field lamp should blink and meter will indicate approximately the set point voltage indicated in the above table.

3. ADDITIONAL TEST: Remove white test lead from terminal marked " Stator". Field lamp should turn off, indicator light will turn on and the meter will indicate low voltage.

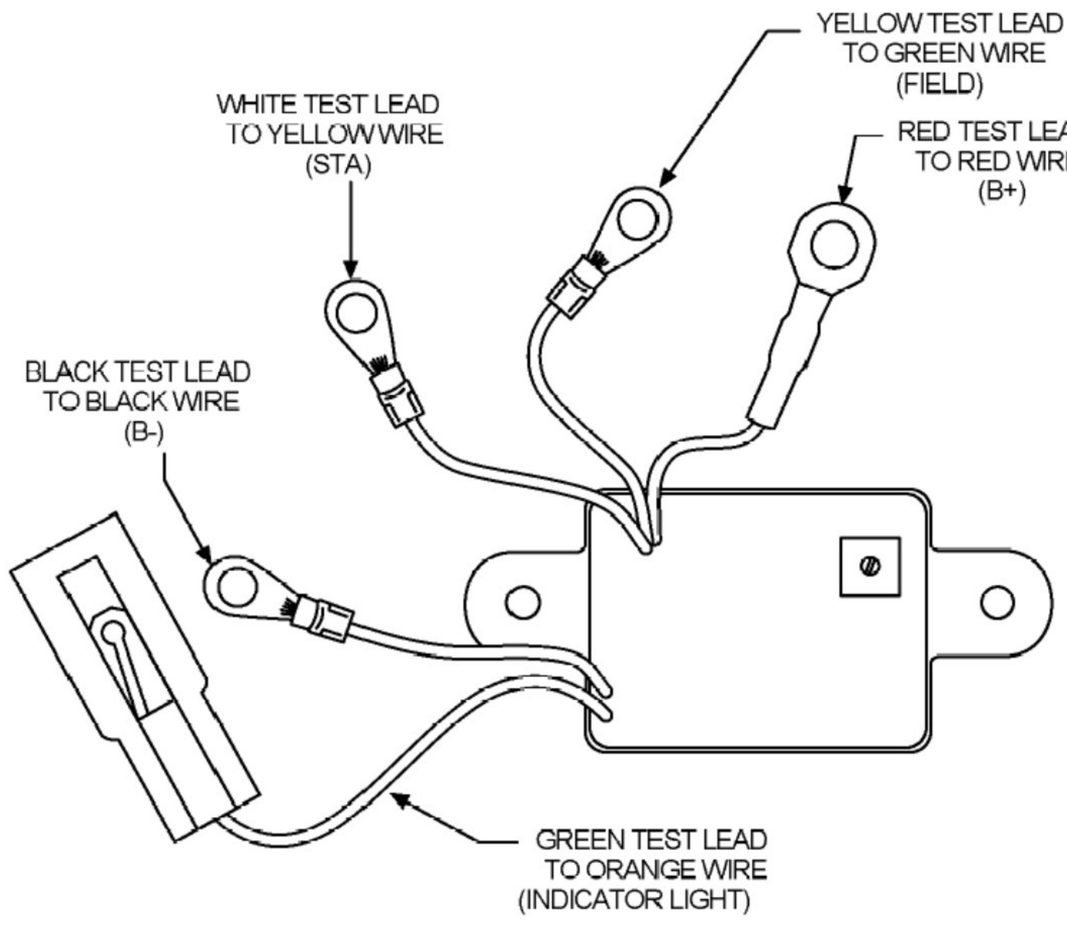

TRANSPO TESTER INSTRUCTIONS

for FORD type regulators

PART NO.	FLD	VOLT	SET POINT	PART NO.	FLD	VOLT	SET POINT
F796	**A**	**12.0**	**14.6**				

1. POWER OFF: Set "Voltage Range" and "FLD" switches to desired setting. Connect the voltage regulator as indicated in the diagram below.

2. POWER ON: Field lamp should blink and meter will indicate approximately the set point voltage indicated in the above table.

3. ADDITIONAL TEST: **Using VRC1000**: To check for over Voltage, push the "Over Voltage" switch and the "Lamp Indicator" will turn on between 16.0V and 17.1V.

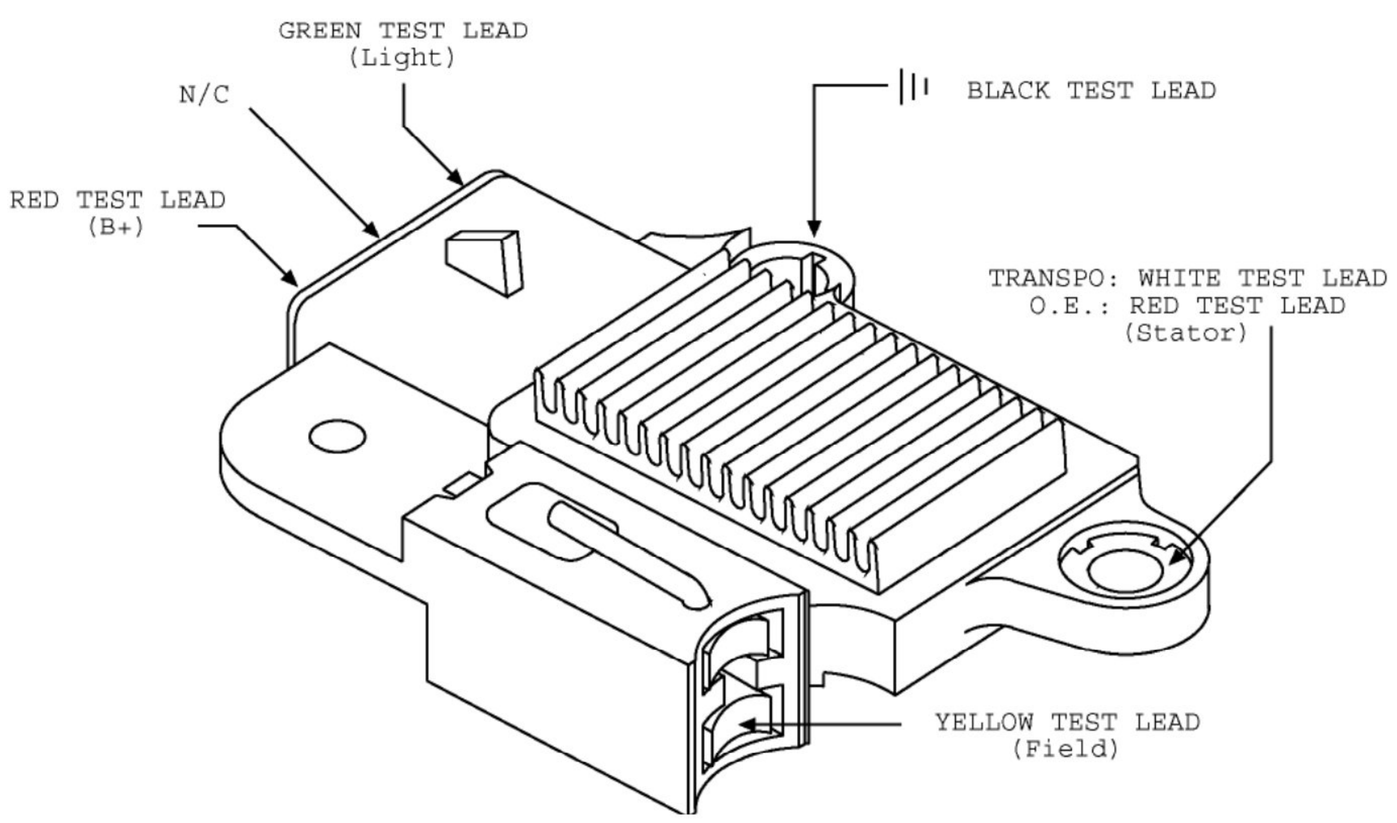

TRANSPO TESTER INSTRUCTIONS

for FORD type regulators

PART NO.	FLD	VOLT	SET POINT	PART NO.	FLD	VOLT	SET POINT
F600	**A**	**12.0**	**14.3**				

1. POWER OFF: Set "Voltage Range" and "FLD" switches to desired setting. Connect the voltage regulator as indicated in the diagram below.

2. POWER ON: Field lamp should blink and meter will indicate approximately the set point voltage indicated in the above table.

3. ADDITIONAL TEST: Remove white test lead from terminal marked “Stator”, field light stays on, voltage remains at 14.3 volt and indicator light turns on. Remove green test lead from “Light” terminal, field light and 12.0 volt light turn off.

Using VRC1000: To check for over Voltage, push the "Over Voltage" switch and the "Lamp Indicator" will turn on between 16.0V and 17.1V.

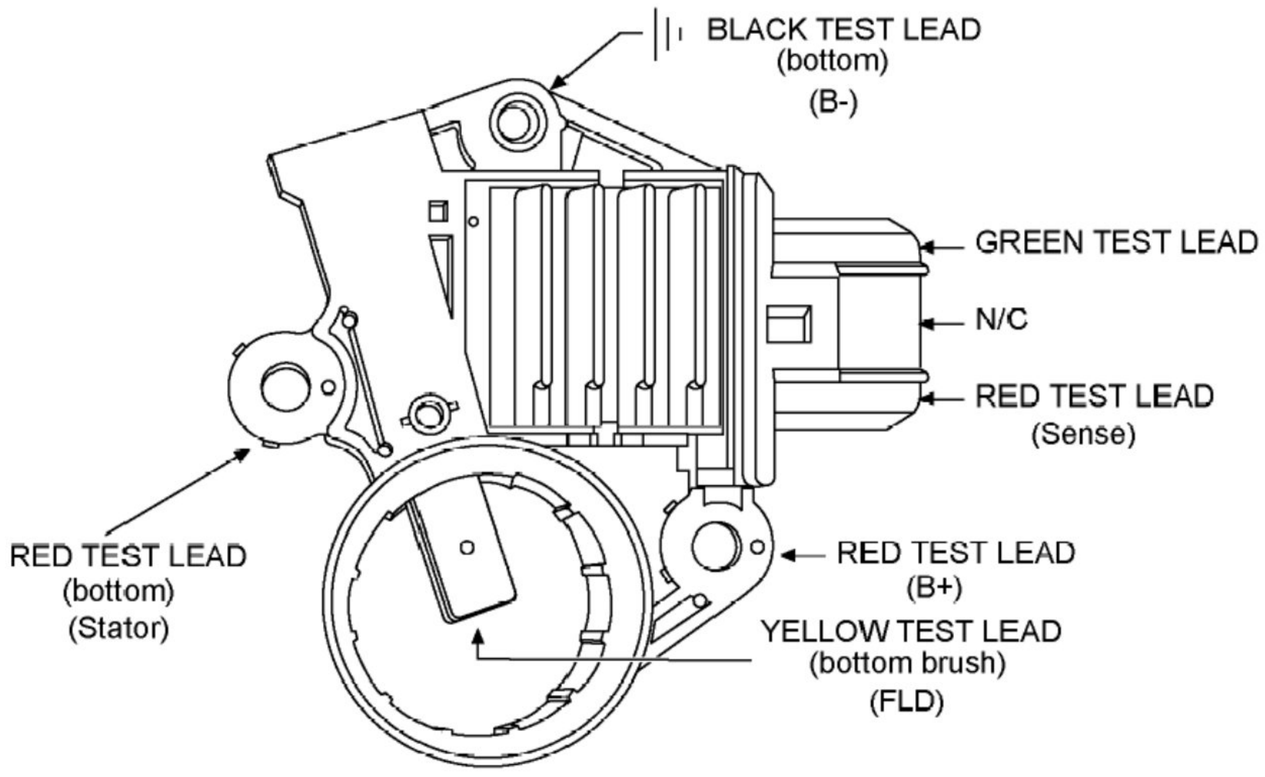

TRANSPO TESTER INSTRUCTIONS

for FORD type regulators

PART NO.	FLD	VOLT	SET POINT	PART NO.	FLD	VOLT	SET POINT
F798	**A**	**12.0**	**14.6**				

1. POWER OFF: Set "Voltage Range" and "FLD" switches to desired setting. Connect the voltage regulator as indicated in the diagram below.

2. POWER ON: Field lamp should blink and meter will indicate approximately the set point voltage indicated in the above table.

3. ADDITIONAL TEST: Remove red test lead from stator and voltage will remain the same and 12 volt lamp will come on.

Using VRC1000: To check for over Voltage, push the "Over Voltage" switch and the "Lamp Indicator" will turn on between 16.0V and 17.1V.

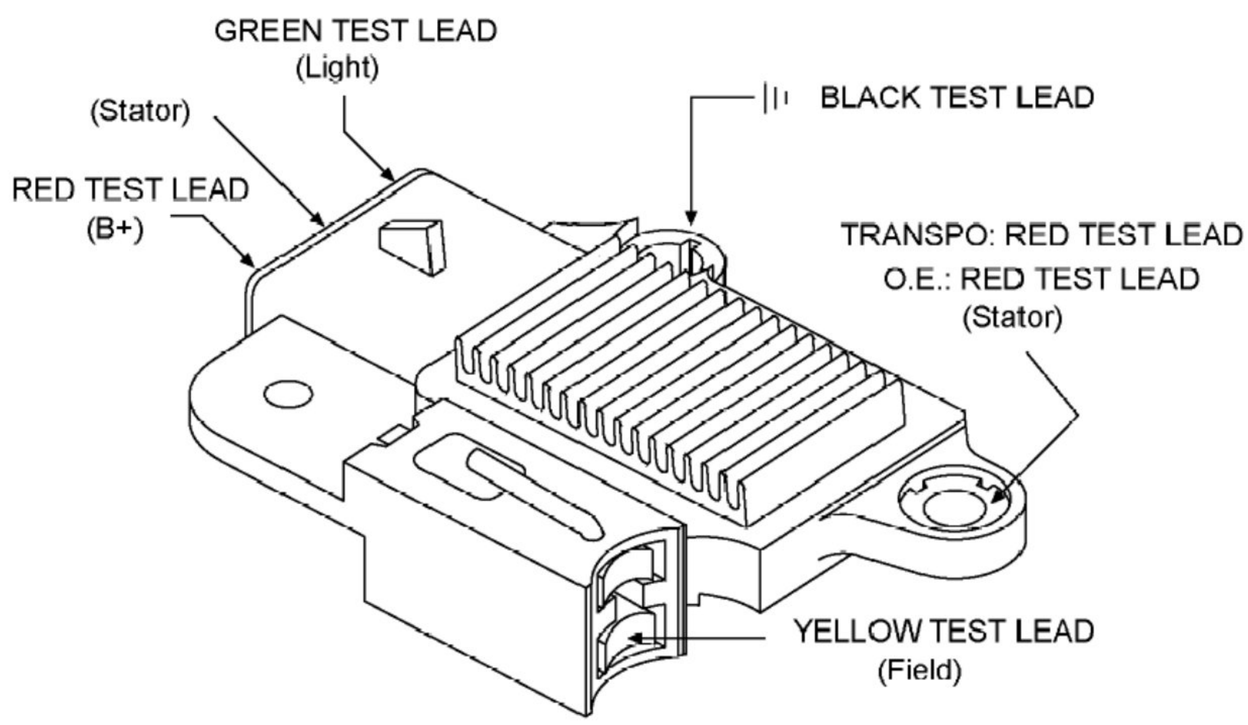

TRANSPO TESTER INSTRUCTIONS

for FORD type regulators

PART NO.	FLD	VOLT	SET POINT	PART NO.	FLD	VOLT	SET POINT
F602	**A**	**12.0**	**14.4**				
F603	**A**	**12.0**	**14.4**				
F605	**A**	**12.0**	**14.4**				
F606	**A**	**12.0**	**14.4**				

1. POWER OFF: Set "Voltage Range" and "FLD" switches to desired setting. Connect the voltage regulator as indicated in the diagram below.

2. POWER ON: Field lamp should blink and meter will indicate approximately the set point voltage indicated in the above table.

3. ADDITIONAL TEST: Remove white test lead from terminal marked “Stator”, field light stays on, voltage drops to 12.0 volt and indicator light turns on. Remove green test lead from “Light” terminal, field light and 12.0 volt light turn off.

Using VRC1000: To check for over Voltage, push the "Over Voltage" switch and the "Lamp Indicator" will turn on between 16.0V and 17.1V.

Note: F605 Disconnect sense terminal, regulator should read aproximately 14.8V.

TRANSPO TESTER INSTRUCTIONS

for FORD type regulators

PART NO.	FLD	VOLT	SET POINT	PART NO.	FLD	VOLT	SET POINT
F601	**A**	**12**	***13.9**				

1. POWER OFF: Set "Voltage Range" and "FLD" switches to desired setting. Connect the voltage regulator as indicated in the diagram below.

2. POWER ON: Field lamp should blink and meter will indicate approximately the set point voltage indicated in the above table.

3. ADDITIONAL TEST: Hook up F601 to VRC101-31/VRC1000A/B as shown below. Turn switch to different poistions and check voltages as shown below.

1. Switch position 1, set to 12.5 Volts
2. Switch position 2, set to 13.5 Volts
3. **Switch position 3, set to 14.5 Volts
4. Switch position 4, set to 15.5 Volts

* When testing without VRC101-31, you will see the default voltage listed above.
** Note: When diagram depicts VRC101-31 set at set point #3, meter indicates 14.5 Volts.

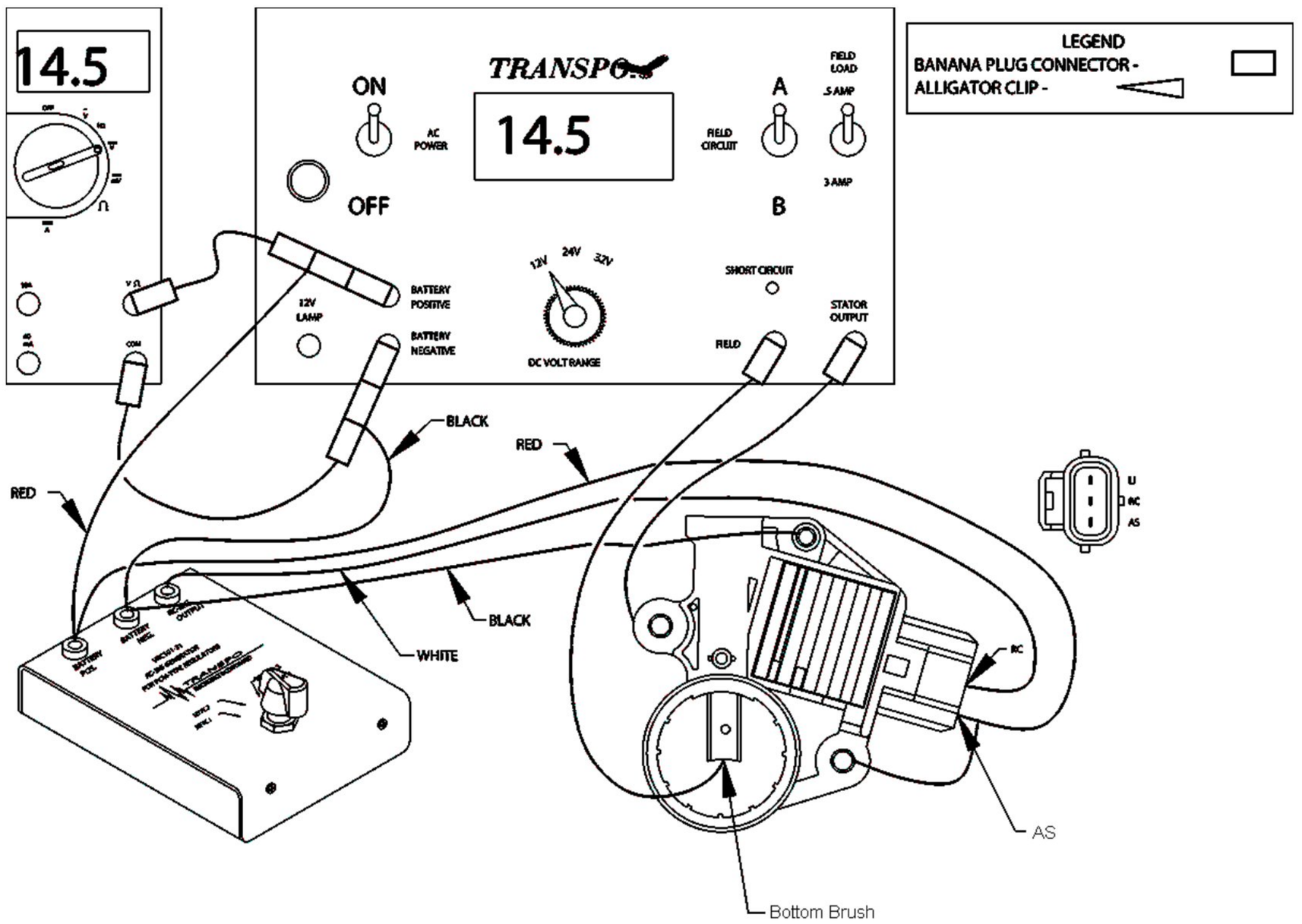

TRANSPO TESTER INSTRUCTIONS

for FORD type regulators

PART NO.	FLD	VOLT	SET POINT	PART NO.	FLD	VOLT	SET POINT
F797	**A**	**12**	***13.9**				

1. POWER OFF: Set "Voltage Range" and "FLD" switches to desired setting. Connect the voltage regulator as indicated in the diagram below.

2. POWER ON: Field lamp should blink and meter will indicate approximately the set point voltage indicated in the above table.

3. ADDITIONAL TEST: * Devault voltage test only for full-function testing --a special adapter box is needed.

1. Switch position 1, set point 12.5 Volts
2. Switch position 2, set point 13.5 Volts
3. Switch position 3, set point 14.5 Volts
4. Switch position 4, set point 15.5 Volts

Note: Set Point 13.9 Default voltage test only. For full-function testing a special adapter box is needed.

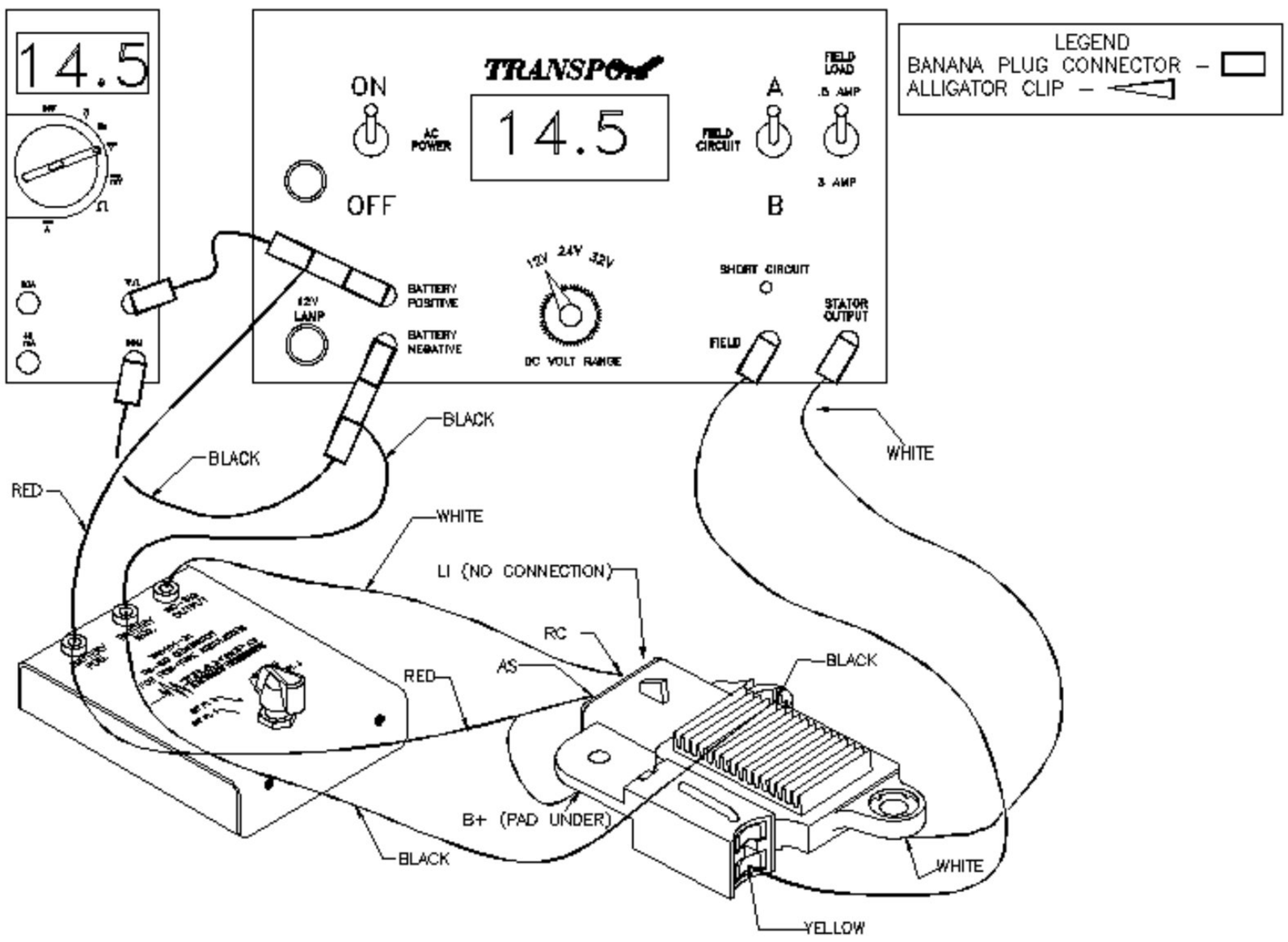

TRANSPO TESTER INSTRUCTIONS

for HARLEY type regulators

PART NO.	FLD	VOLT	SET POINT	PART NO.	FLD	VOLT	SET POINT
H0478	**A**	**12**	**15.1**				
H0482	**A**	**12**	**15.1**				

1. POWER OFF: Set "Voltage Range" and "FLD" switches to desired setting. Connect the voltage regulator as indicated in the diagram below.

2. POWER ON: Field lamp should blink and meter will indicate approximately the set point voltage indicated in the above table.

3. ADDITIONAL TEST:

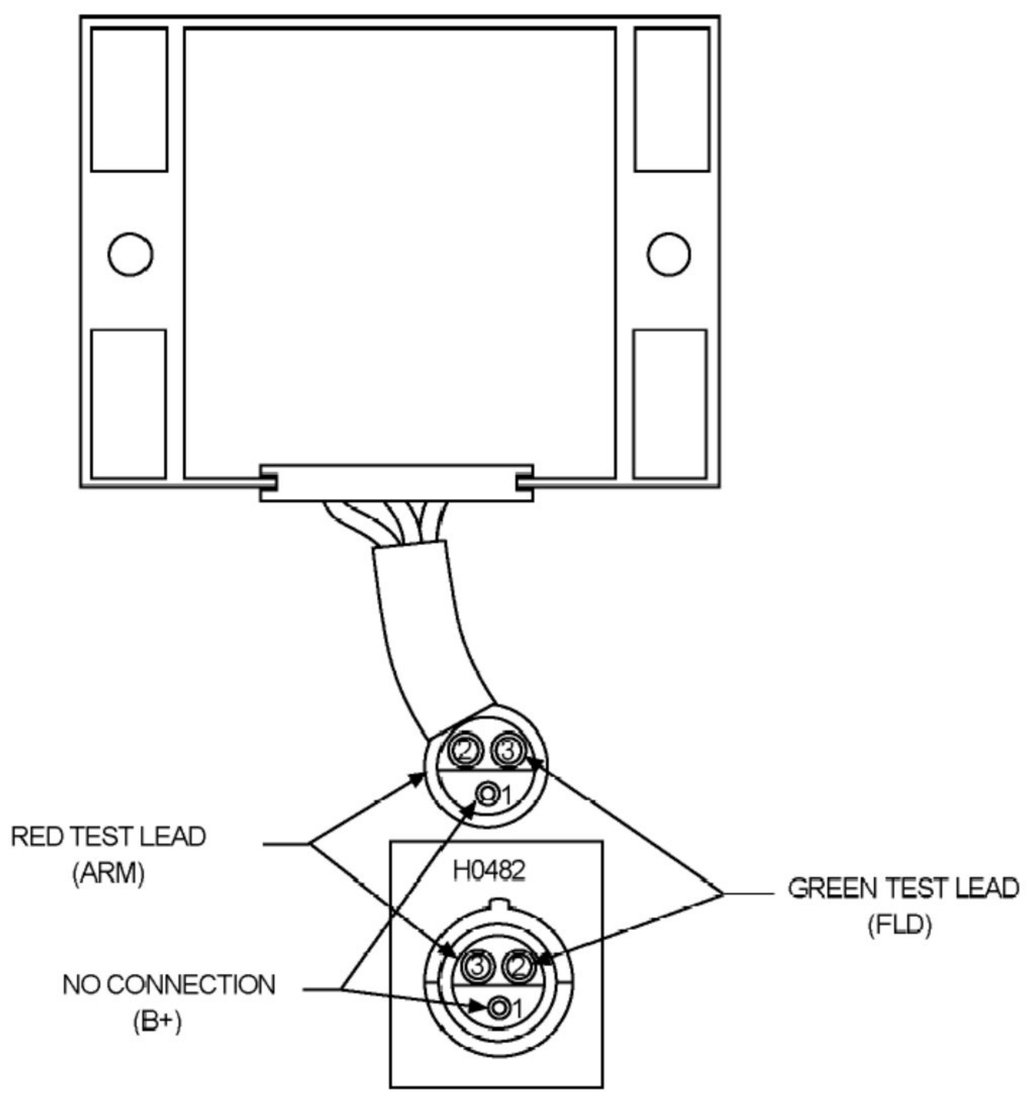

TRANSPO TESTER INSTRUCTIONS

for HARLEY type regulators

PART NO.	FLD	VOLT	SET POINT	PART NO.	FLD	VOLT	SET POINT
H606	**A**	**6**	**7.5**				
H614	**A**	**12**	**15.1**				

1. POWER OFF: Set "Voltage Range" and "FLD" switches to desired setting. Connect the voltage regulator as indicated in the diagram below.

2. POWER ON: Field lamp should blink and meter will indicate approximately the set point voltage indicated in the above table.

3. ADDITIONAL TEST:

NOTE: Transpo's standard voltage regulator tester offers 12, 24 and 32 volts. However, we also offer testers with additional 6 and 8 volt ranges.

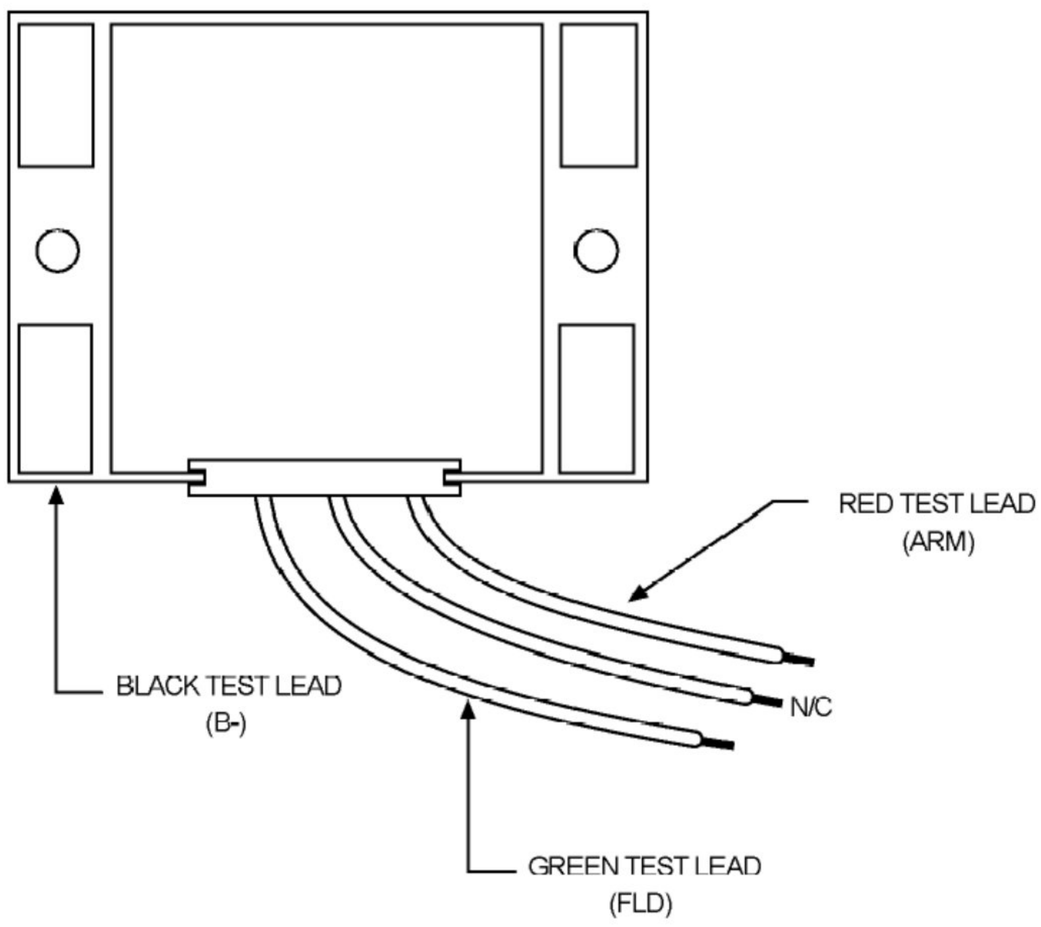

TRANSPO TESTER INSTRUCTIONS

for HITACHI type regulators

PART NO.	FLD	VOLT	SET POINT	PART NO.	FLD	VOLT	SET POINT
IH605	**B**	**12**	**14.2**				

1. POWER OFF: Set "Voltage Range" and "FLD" switches to desired setting. Connect the voltage regulator as indicated in the diagram below.

2. POWER ON: Field lamp should blink and meter will indicate approximately the set point voltage indicated in the above table.

3. ADDITIONAL TEST: Remove red test lead from the terminal marked "STA". Warning light will turn on and meter should set point voltage.

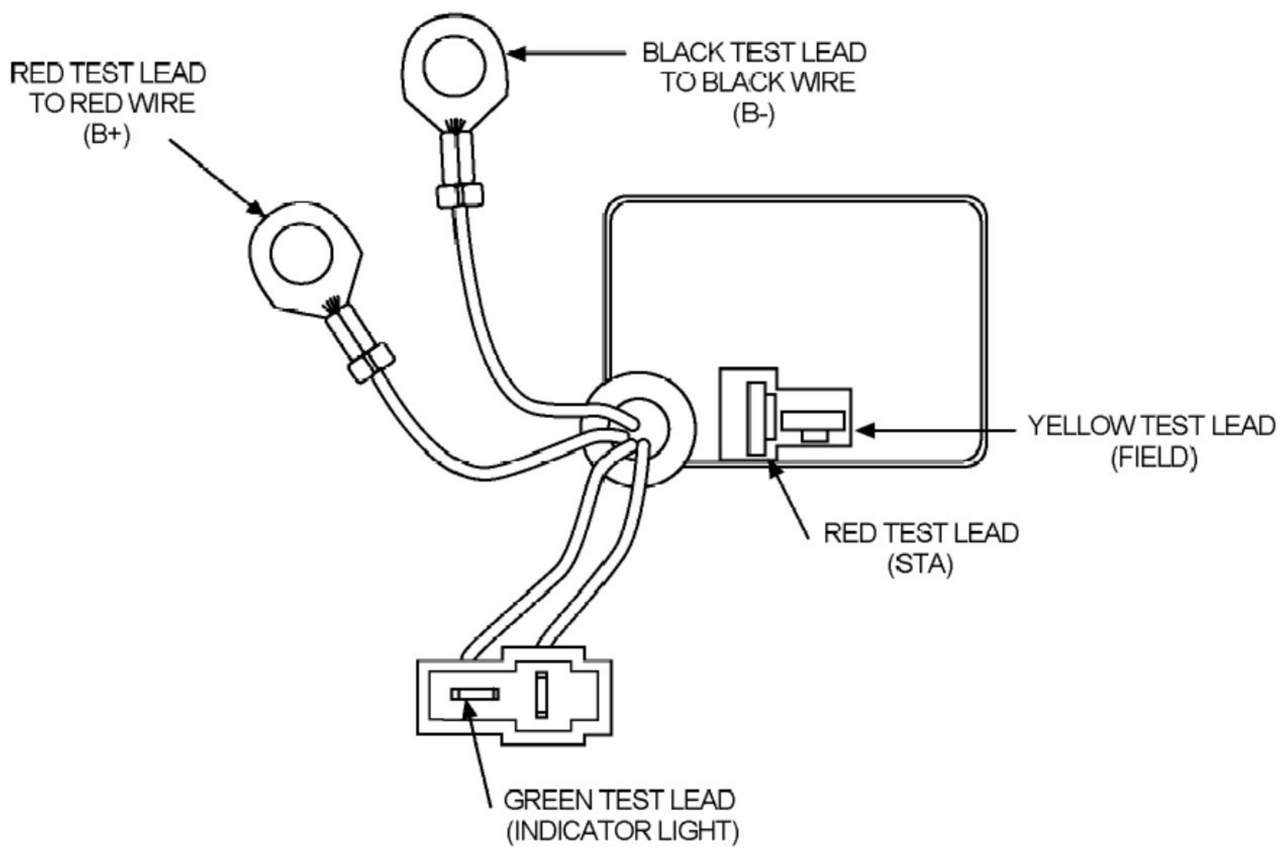

TRANSPO TESTER INSTRUCTIONS

for HITACHI type regulators

PART NO.	FLD	VOLT	SET POINT	PART NO.	FLD	VOLT	SET POINT
IH209	**A**	**12**	**14.7**	**IH212**	**A**	**12**	**14.3**
IH210	**A**	**12**	**14.3**	**IH213**	**A**	**12**	**14.3**
IH210HD	**A**	**12**	**14.2**				
IH211	**A**	**12**	**14.7**				

1. POWER OFF: Set "Voltage Range" and "FLD" switches to desired setting. Connect the voltage regulator as indicated in the diagram below.

2. POWER ON: Field lamp should blink and meter will indicate approximately the set point voltage indicated in the above table.

3. ADDITIONAL TEST:

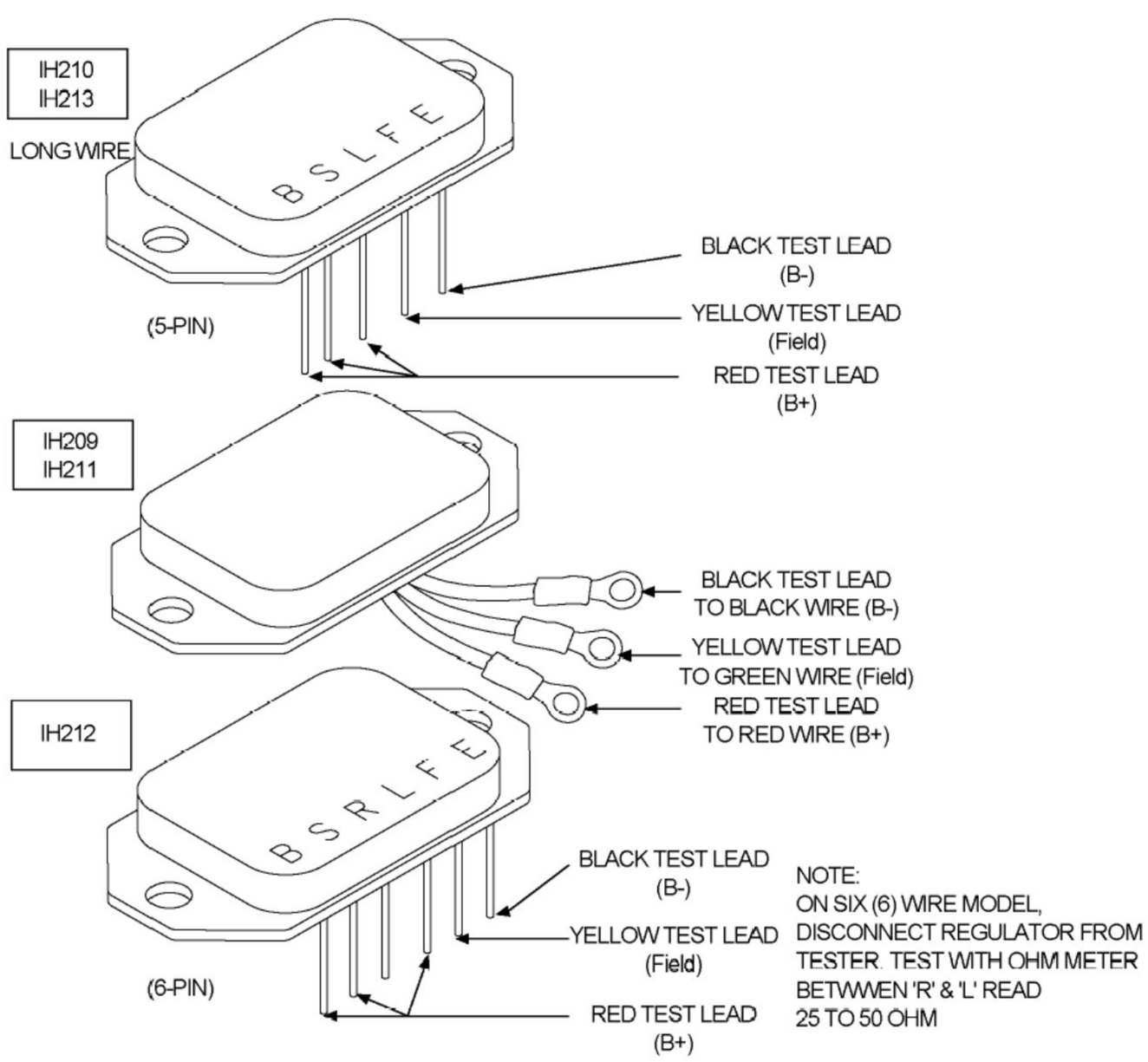

TRANSPO TESTER INSTRUCTIONS

for HITACHI type regulators

PART NO.	FLD	VOLT	SET POINT	PART NO.	FLD	VOLT	SET POINT
IH201	**A**	**12**	**14.3**				
IH202	**A**	**12**	**14.3**				
IH203	**A**	**12**	**14.3**				

1. POWER OFF: Set "Voltage Range" and "FLD" switches to desired setting. Connect the voltage regulator as indicated in the diagram below.

2. POWER ON: Field lamp should blink and meter will indicate approximately the set point voltage indicated in the above table.

3. ADDITIONAL TEST:

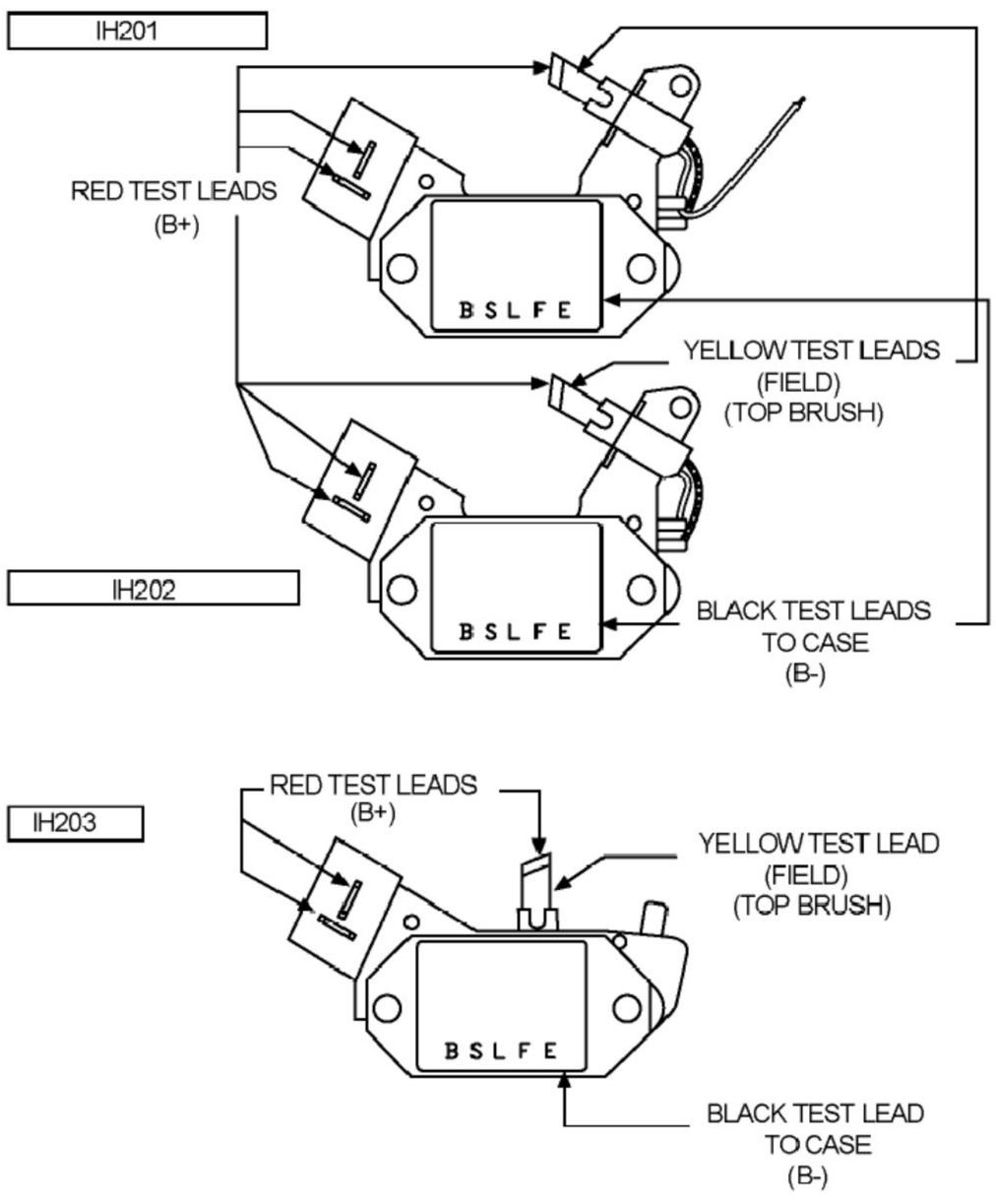

TRANSPO TESTER INSTRUCTIONS

for HITACHI type regulators

PART NO.	FLD	VOLT	SET POINT	PART NO.	FLD	VOLT	SET POINT
IH214	**A**	**12**	**14.4**				
IH215	**A**	**12**	**14.2**				
IH707	**A**	**24**	**28.5**				

1. POWER OFF: Set "Voltage Range" and "FLD" switches to desired setting. Connect the voltage regulator as indicated in the diagram below.

2. POWER ON: Field lamp should blink and meter will indicate approximately the set point voltage indicated in the above table.

3. ADDITIONAL TEST:

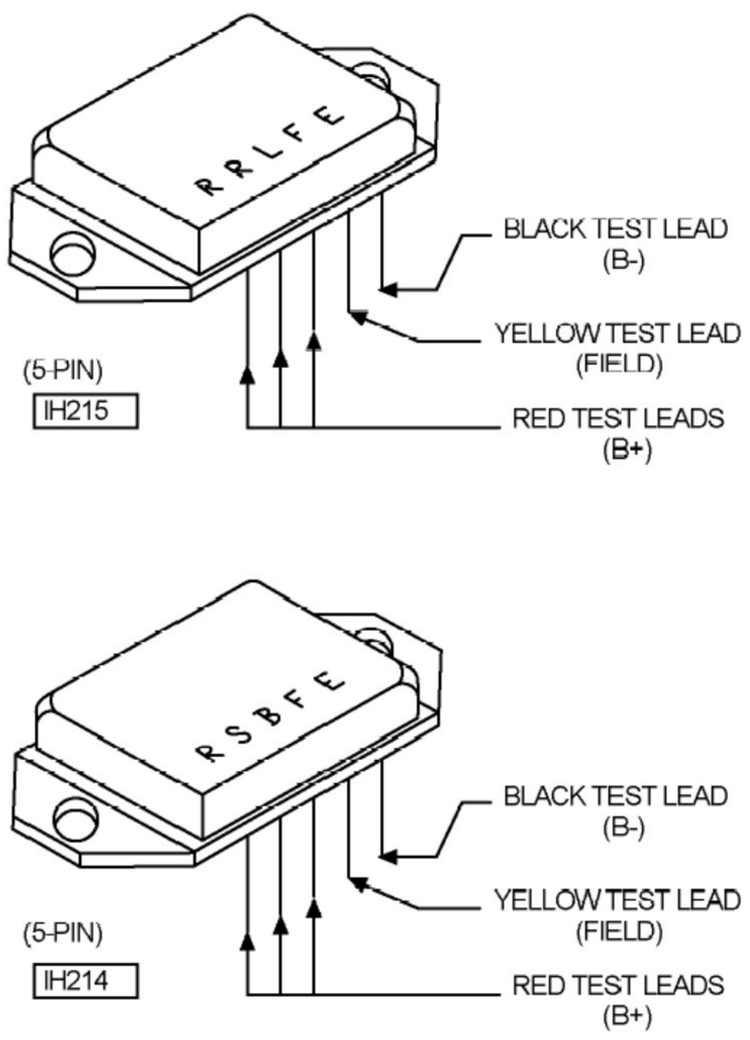

TRANSPO TESTER INSTRUCTIONS

for HITACHI type regulators

PART NO.	FLD	VOLT	SET POINT	PART NO.	FLD	VOLT	SET POINT
IH811	**B**	**12**	**14.3**				
IH814	**B**	**12**	**14.3**				
IH820	**B**	**12**	**14.3**				

1. POWER OFF: Set "Voltage Range" and "FLD" switches to desired setting. Connect the voltage regulator as indicated in the diagram below.

2. POWER ON: Field lamp should blink and meter will indicate approximately the set point voltage indicated in the above table.

3. ADDITIONAL TEST: Remove test lead from terminal marked "STA" Indicator light should turn on and the meter will still indicate the set point voltage.

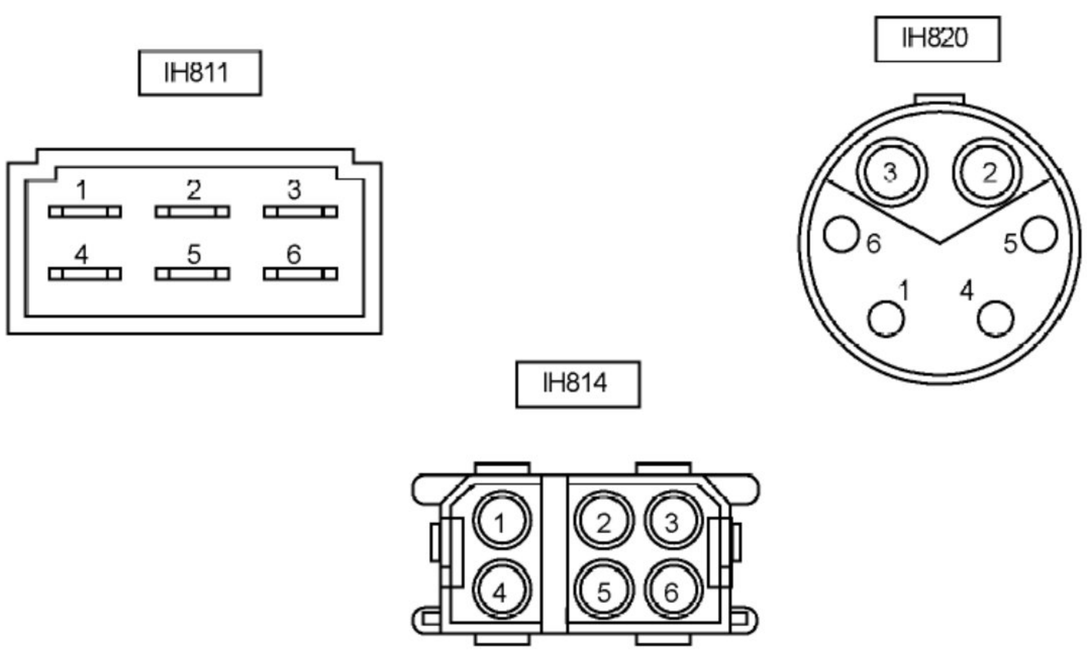

* NOTES:
1 - RED TEST LEAD (STA)
2 - RED TEST LEAD (B+)
3 - GREEN TEST LEAD (I.L.)
4 - BLACK TEST LEAD (B-)
5 - YELLOW TEST LEAD (FLD)
6 - RED TEST LEAD (IGN)

TRANSPO TESTER INSTRUCTIONS

for HITACHI type regulators

PART NO.	FLD	VOLT	SET POINT	PART NO.	FLD	VOLT	SET POINT
IH237	**A**	**12**	**14.6**				
IH238	**A**	**12**	**14.6**				
IH239	**A**	**12**	**14.6**				

1. POWER OFF: Set "Voltage Range" and "FLD" switches to desired setting. Connect the voltage regulator as indicated in the diagram below.

2. POWER ON: Field lamp should blink and meter will indicate approximately the set point voltage indicated in the above table.

3. ADDITIONAL TEST: Remove red test lead from terminal marked "S". Field lamp should still blink and the meter will indicate approximately 15.5V.

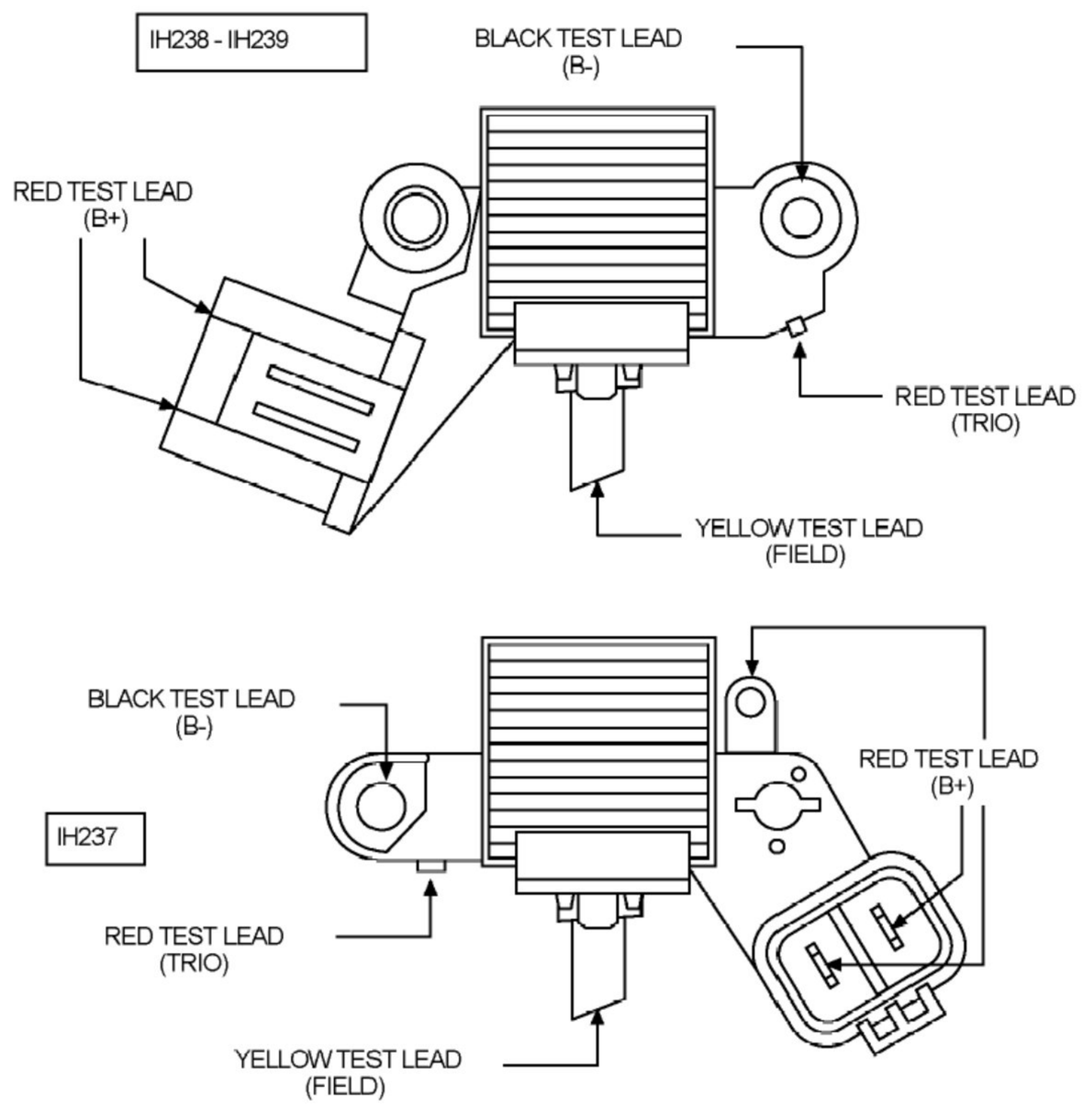

TRANSPO TESTER INSTRUCTIONS

for HITACHI type regulators

PART NO.	FLD	VOLT	SET POINT	PART NO.	FLD	VOLT	SET POINT
IH833	**B**	**12**	**14.3**				

1. POWER OFF: Set "Voltage Range" and "FLD" switches to desired setting. Connect the voltage regulator as indicated in the diagram below.

2. POWER ON: Field lamp should blink and meter will indicate approximately the set point voltage indicated in the above table.

3. ADDITIONAL TEST: Remove test lead from terminal marked "STA". Indicator light should turn on and the meter will still indicate the set point voltage.

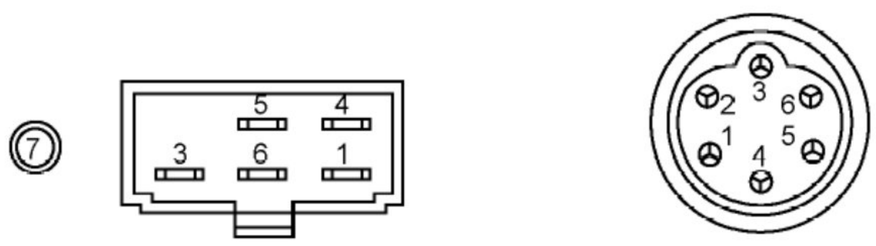

IH815

IH816

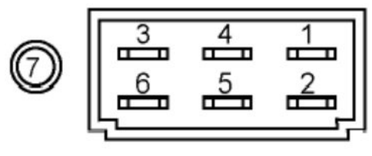

IH830

NOTES:
1 - RED TEST LEAD (STA)
2 - RED TEST LEAD (B+)
3 - GREEN TEST LEAD (I.L.)
4 - BLACK TEST LEAD (B-)
5 - YELLOW TEST LEAD (FLD)
6 - RED TEST LEAD (IGN)
7 - NO CONNECTION

TRANSPO TESTER INSTRUCTIONS

for HITACHI type regulators

PART NO.	FLD	VOLT	SET POINT	PART NO.	FLD	VOLT	SET POINT
IH815	**B**	**12**	**14.3**				
IH816	**B**	**12**	**14.3**				
IH830	**B**	**12**	**14.3**				

1. POWER OFF: Set "Voltage Range" and "FLD" switches to desired setting. Connect the voltage regulator as indicated in the diagram below.

2. POWER ON: Field lamp should blink and meter will indicate approximately the set point voltage indicated in the above table.

3. ADDITIONAL TEST: Remove test lead from terminal marked "STA" Indicator light should turn on and the meter will still indicate the set point voltage.

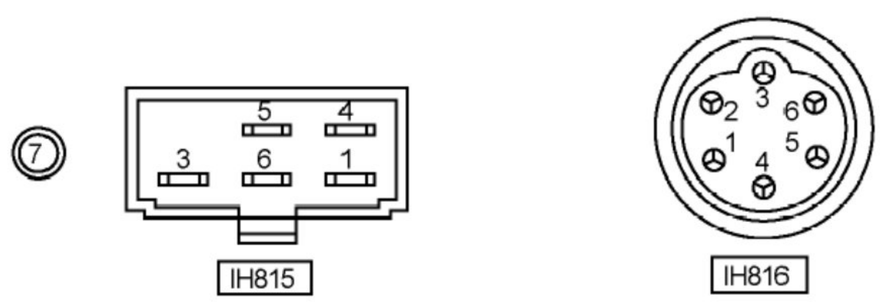

NOTES:
1 - RED TEST LEAD (STA)
2 - RED TEST LEAD (B+)
3 - GREEN TEST LEAD (I.L.)
4 - BLACK TEST LEAD (B-)
5 - YELLOW TEST LEAD (FLD)
6 - RED TEST LEAD (IGN)
7 - NO CONNECTION

TRANSPO TESTER INSTRUCTIONS

for HITACHI type regulators

PART NO.	FLD	VOLT	SET POINT	PART NO.	FLD	VOLT	SET POINT
IH240	**A**	**12**	**14.6**				

1. POWER OFF: Set "Voltage Range" and "FLD" switches to desired setting. Connect the voltage regulator as indicated in the diagram below.

2. POWER ON: Field lamp should blink and meter will indicate approximately the set point voltage indicated in the above table.

3. ADDITIONAL TEST: Remove red test lead from terminal marked "S" Field lamp should still blink and the meter will indicate approximately 15.5V.

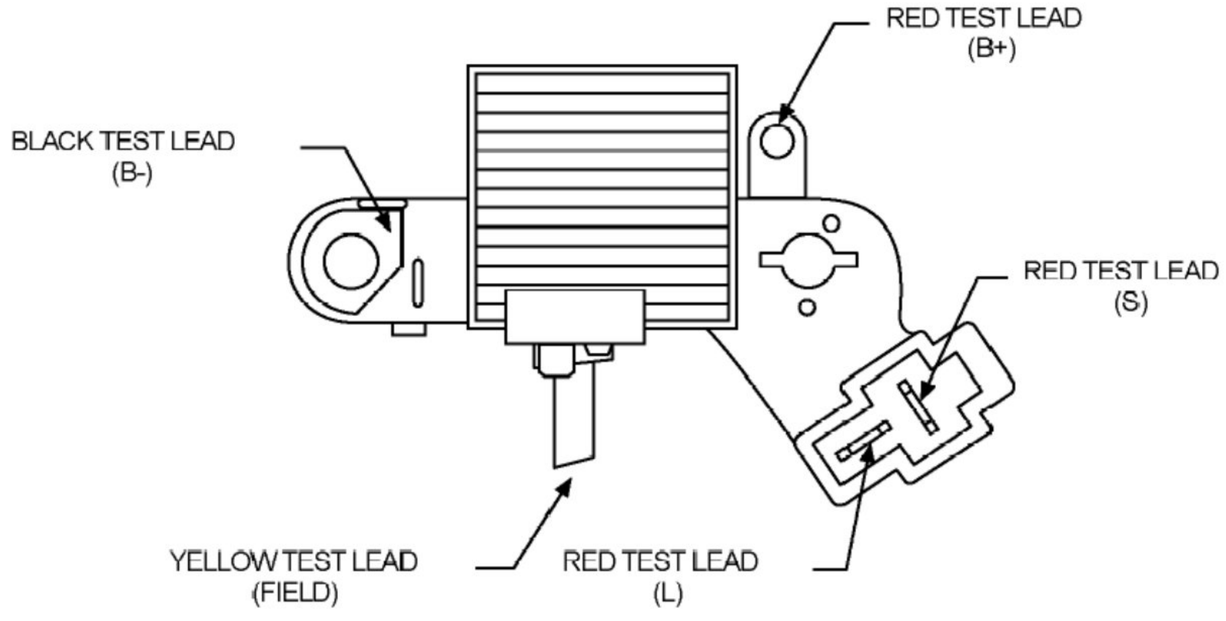

TRANSPO TESTER INSTRUCTIONS

for HITACHI type regulators

PART NO.	FLD	VOLT	SET POINT	PART NO.	FLD	VOLT	SET POINT
IH245	**A**	**12**	**14.6**				

1. POWER OFF: Set "Voltage Range" and "FLD" switches to desired setting. Connect the voltage regulator as indicated in the diagram below.

2. POWER ON: Field lamp should blink and meter will indicate approximately the set point voltage indicated in the above table.

3. ADDITIONAL TEST: Remove red test lead from terminal "S" Field lamp should still blink and the meter will indicate approximately 15.5 V.

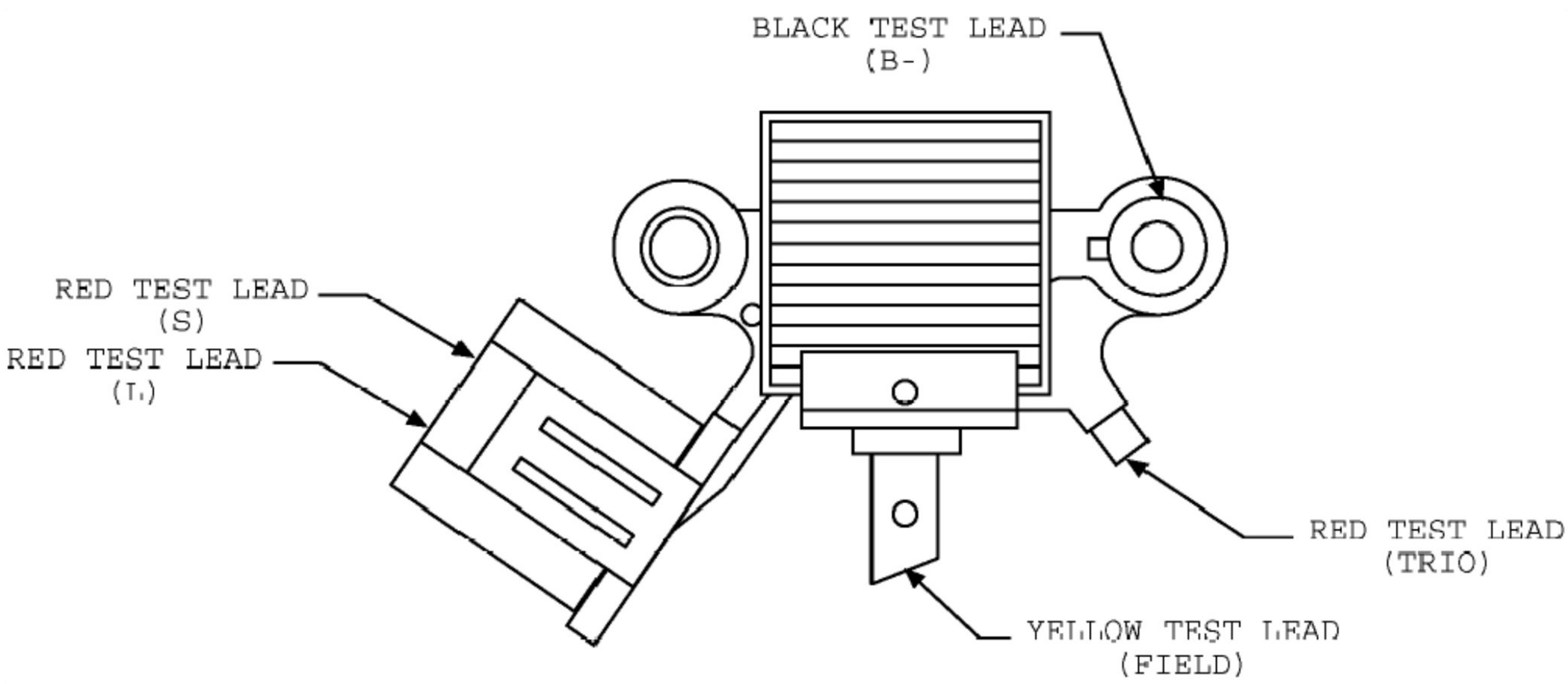

TRANSPO TESTER INSTRUCTIONS

for HITACHI type regulators

PART NO.	FLD	VOLT	SET POINT	PART NO.	FLD	VOLT	SET POINT
IH241	**A**	**12**	**14.6**				
IH244	**A**	**12**	**14.6**				

1. POWER OFF: Set "Voltage Range" and "FLD" switches to desired setting. Connect the voltage regulator as indicated in the diagram below.

2. POWER ON: Field lamp should blink and meter will indicate approximately the set point voltage indicated in the above table.

3. ADDITIONAL TEST: Remove red test lead from terminal marked "S". Field lamp should still blink and the meter will indicate approximately 15.5V.

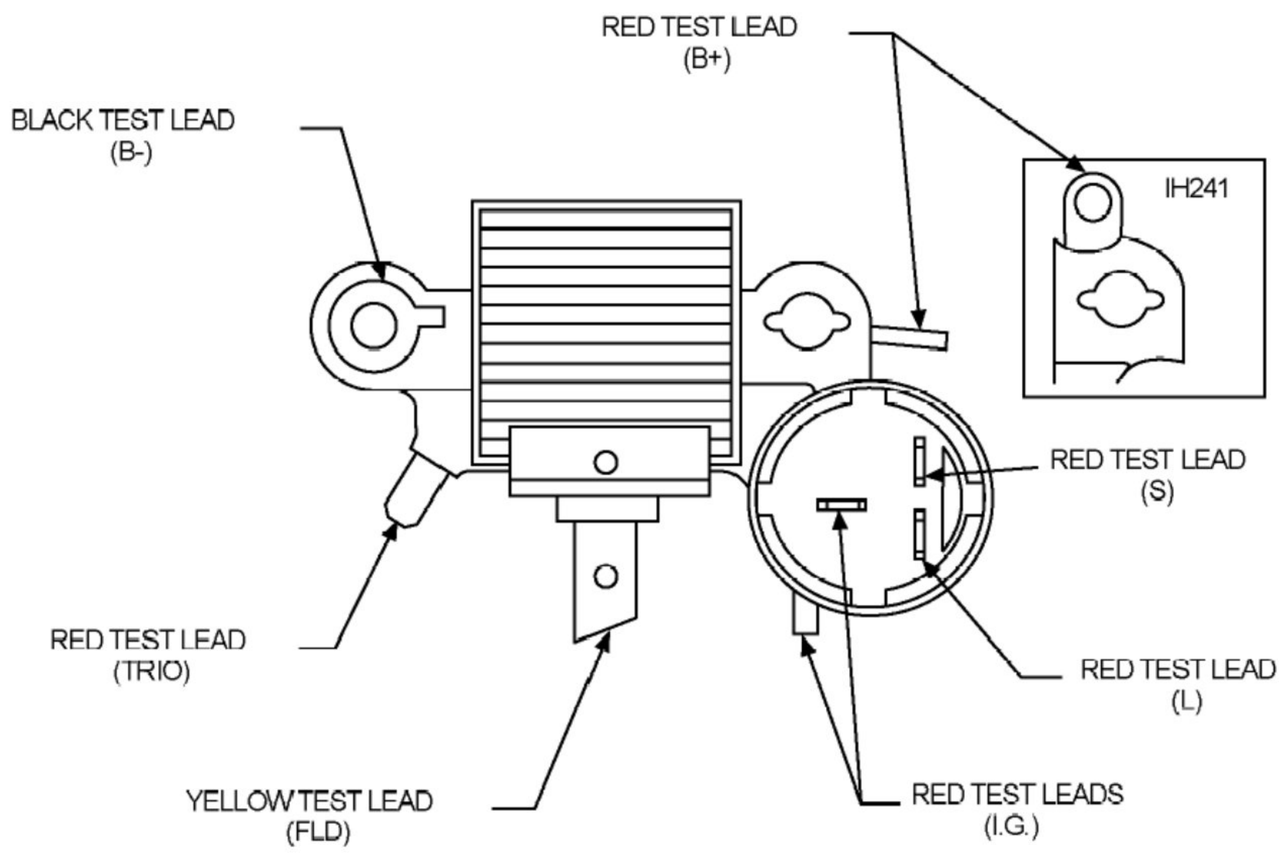

TRANSPO TESTER INSTRUCTIONS

for HITACHI type regulators

PART NO.	FLD	VOLT	SET POINT	PART NO.	FLD	VOLT	SET POINT
IH243	**A**	**12**	**14.6**				
IH246	**A**	**12**	**14.6**				

1. POWER OFF: Set "Voltage Range" and "FLD" switches to desired setting. Connect the voltage regulator as indicated in the diagram below.

2. POWER ON: Field lamp should blink and meter will indicate approximately the set point voltage indicated in the above table.

3. ADDITIONAL TEST: Remove red test lead from terminal marked "S". Field lamp should still blink and the meter will indicate approximately 15.5V.

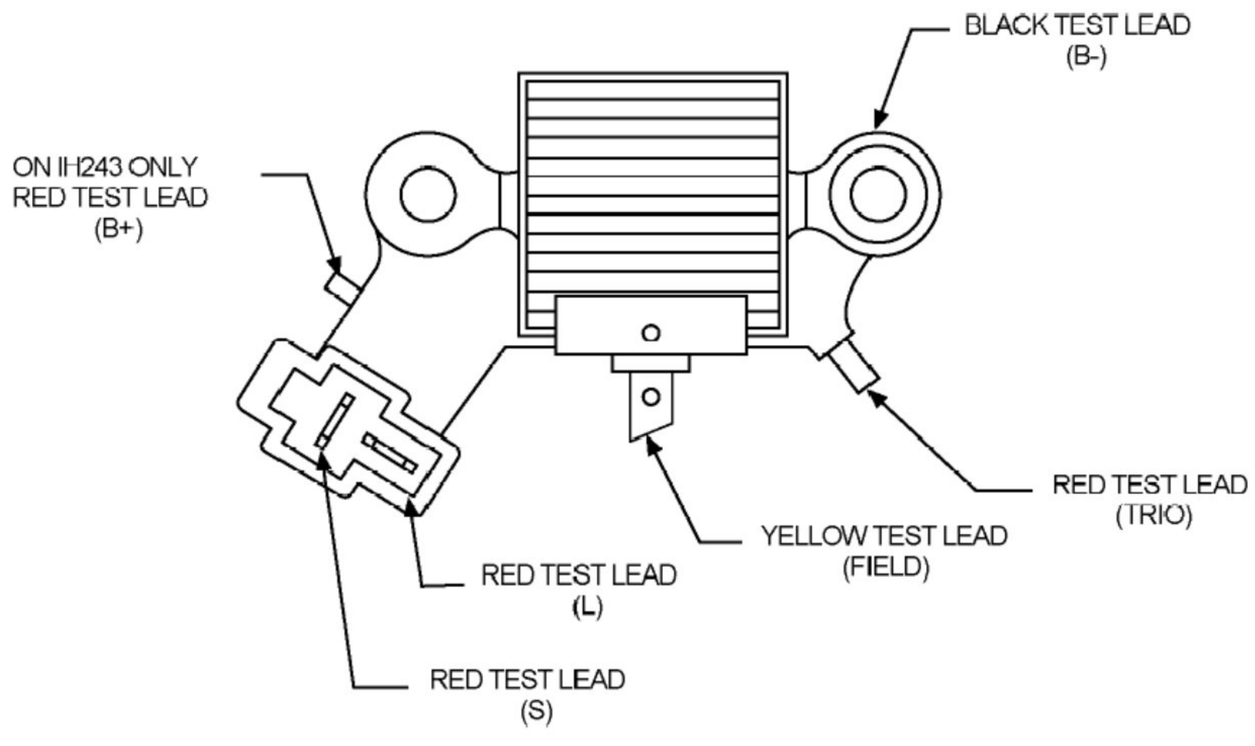

TRANSPO TESTER INSTRUCTIONS

for HITACHI type regulators

PART NO.	FLD	VOLT	SET POINT	PART NO.	FLD	VOLT	SET POINT
IH242	**A**	**12**	**14.6**				

1. POWER OFF: Set "Voltage Range" and "FLD" switches to desired setting. Connect the voltage regulator as indicated in the diagram below.

2. POWER ON: Field lamp should blink and meter will indicate approximately the set point voltage indicated in the above table.

3. ADDITIONAL TEST: Remove red test lead from terminal marked "S". Field lamp should still blink and the meter will indicate approximately 15.5V.

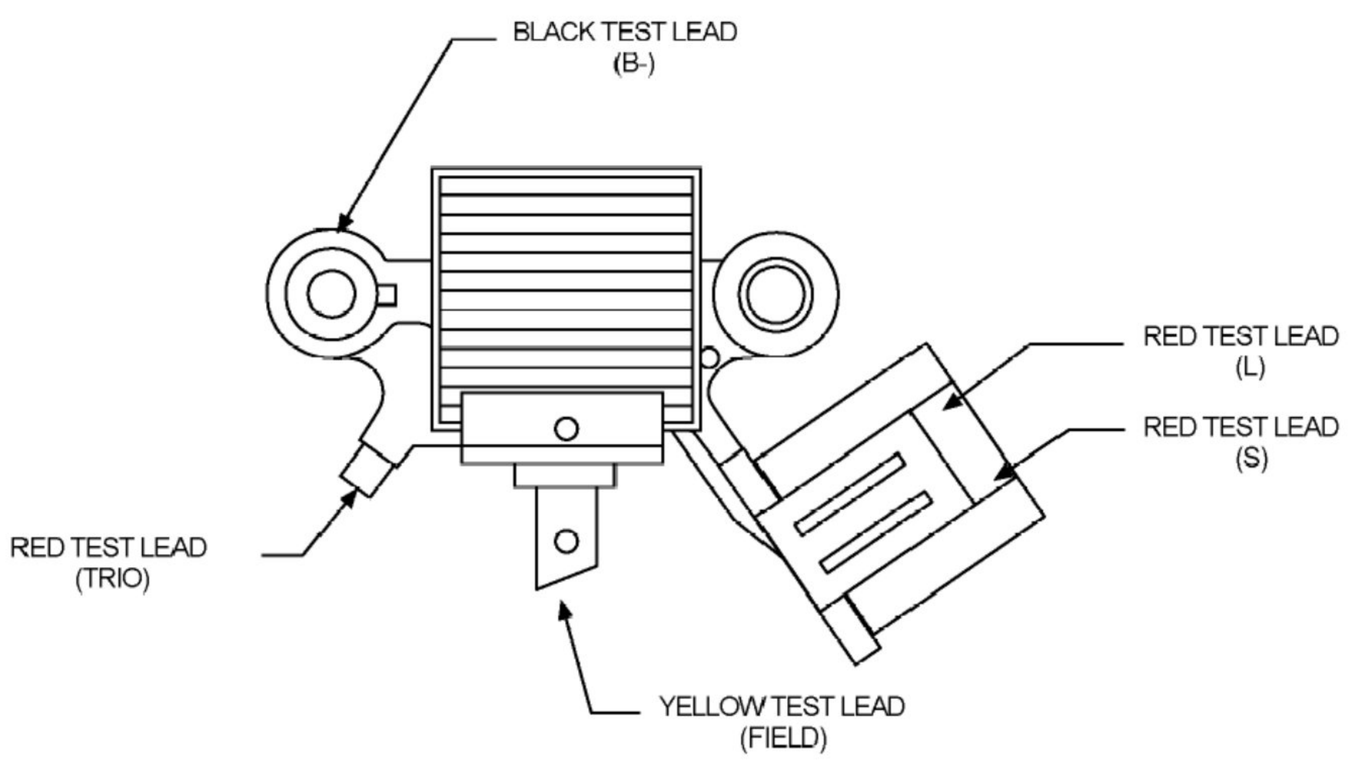

TRANSPO TESTER INSTRUCTIONS

for HITACHI type regulators

PART NO.	FLD	VOLT	SET POINT	PART NO.	FLD	VOLT	SET POINT
IH247	**A**	**12**	**14.4**				

1. POWER OFF: Set "Voltage Range" and "FLD" switches to desired setting. Connect the voltage regulator as indicated in the diagram below.

2. POWER ON: Field lamp should blink and meter will indicate approximately the set point voltage indicated in the above table.

3. ADDITIONAL TEST: Remove white test lead from terminal marked "STA". Indicator light should turn on, field lamp will remain on and meter will indicate approximately 12V. Remove red test lead from terminal marked "IG". Field lamp should turn off.

Using VRC1000: To check for over Voltage, push the "Over Voltage" switch and the "Lamp Indicator" will turn on between 16.0V and 17.1V.

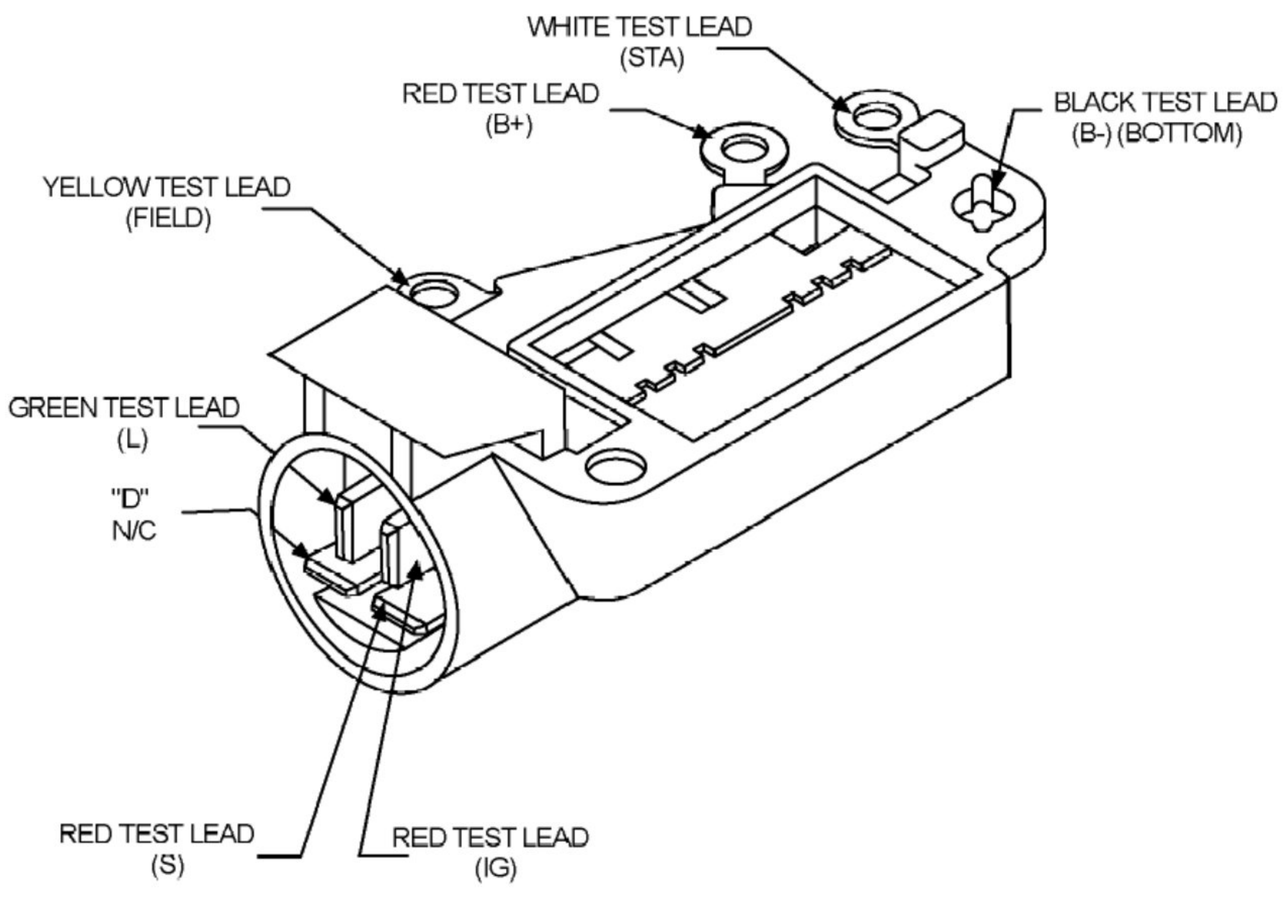

TRANSPO TESTER INSTRUCTIONS

for HITACHI type regulators

PART NO.	FLD	VOLT	SET POINT	PART NO.	FLD	VOLT	SET POINT
IH248	**A**	**12**	**14.4**				

1. POWER OFF: Set "Voltage Range" and "FLD" switches to desired setting. Connect the voltage regulator as indicated in the diagram below.

2. POWER ON: Field lamp should blink and meter will indicate approximately the set point voltage indicated in the above table.

3. ADDITIONAL TEST: Remove red test lead from terminal marked "S". Field lamp should still blink and the meter will indicate approximately 15.5V.

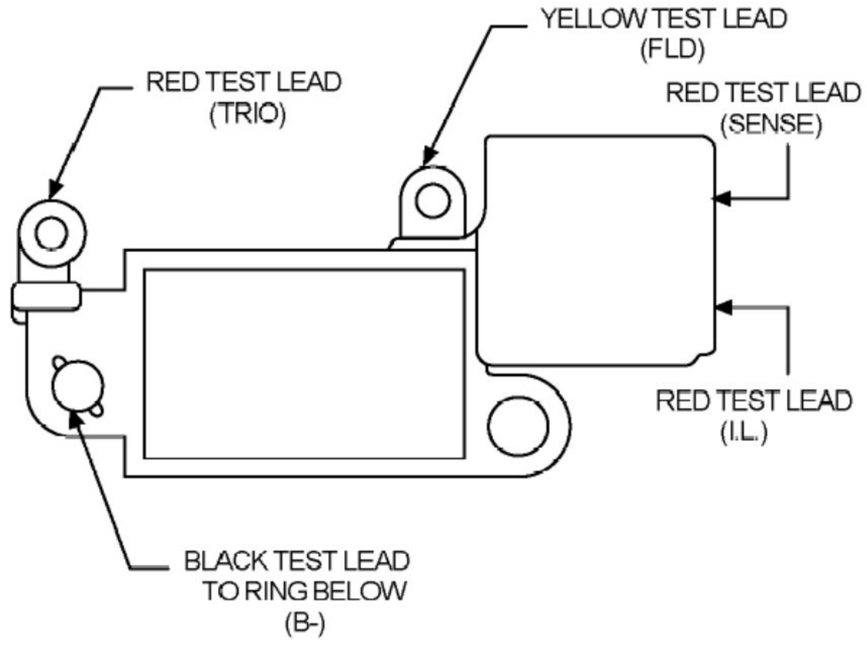

TRANSPO TESTER INSTRUCTIONS

for HITACHI type regulators

PART NO.	FLD	VOLT	SET POINT	PART NO.	FLD	VOLT	SET POINT
IH832	**B**	**12**	**14.3**				

1. POWER OFF: Set "Voltage Range" and "FLD" switches to desired setting. Connect the voltage regulator as indicated in the diagram below.

2. POWER ON: Field lamp should blink and meter will indicate approximately the set point voltage indicated in the above table.

3. ADDITIONAL TEST: Remove black test lead from terminal marked "STA". Indicator lamp should turn on and the meter will still indicate the set point voltage.

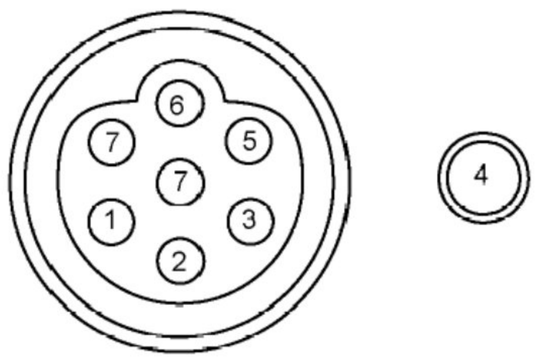

NOTES:
1 - RED TEST LEAD (IGN)
2 - BLACK TEST LEAD (STA)
3 - YELLOW TEST LEAD (FIELD)
4 - BLACK TEST LEAD (B-)
5 - GREEN TEST LEAD (I.L.)
6 - RED TEST LEAD (B+)
7 - NO CONNECTION

TRANSPO TESTER INSTRUCTIONS

for HITACHI type regulators

PART NO.	FLD	VOLT	SET POINT	PART NO.	FLD	VOLT	SET POINT
IH717	**A**	**12**	**14.3**				

1. POWER OFF: Set "Voltage Range" and "FLD" switches to desired setting. Connect the voltage regulator as indicated in the diagram below.

2. POWER ON: Field lamp should blink and meter will indicate approximately the set point voltage indicated in the above table.

3. ADDITIONAL TEST:

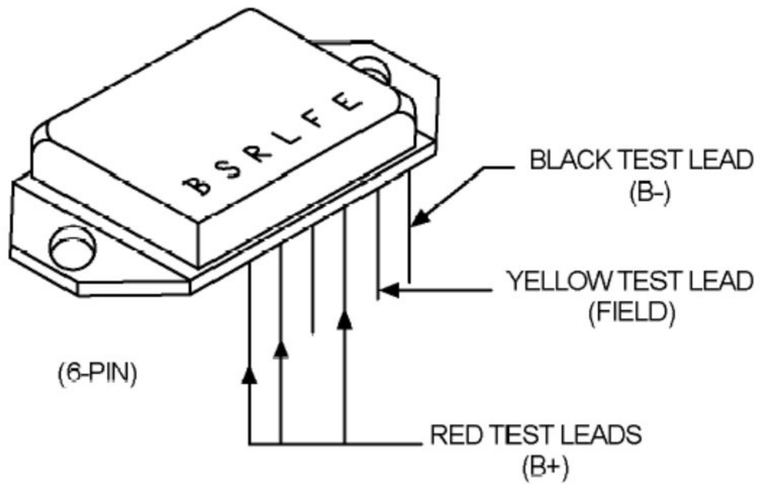

TRANSPO TESTER INSTRUCTIONS

for HITACHI type regulators

PART NO.	FLD	VOLT	SET POINT	PART NO.	FLD	VOLT	SET POINT
IH250	**A**	**12**	**14.6**				

1. POWER OFF: Set "Voltage Range" and "FLD" switches to desired setting. Connect the voltage regulator as indicated in the diagram below.

2. POWER ON: Field lamp should blink and meter will indicate approximately the set point voltage indicated in the above table.

3. ADDITIONAL TEST: Remove red test lead from terminal marked "S". Field lamp should still blink and the meter will indicate approximately 1 volt higher than set point.

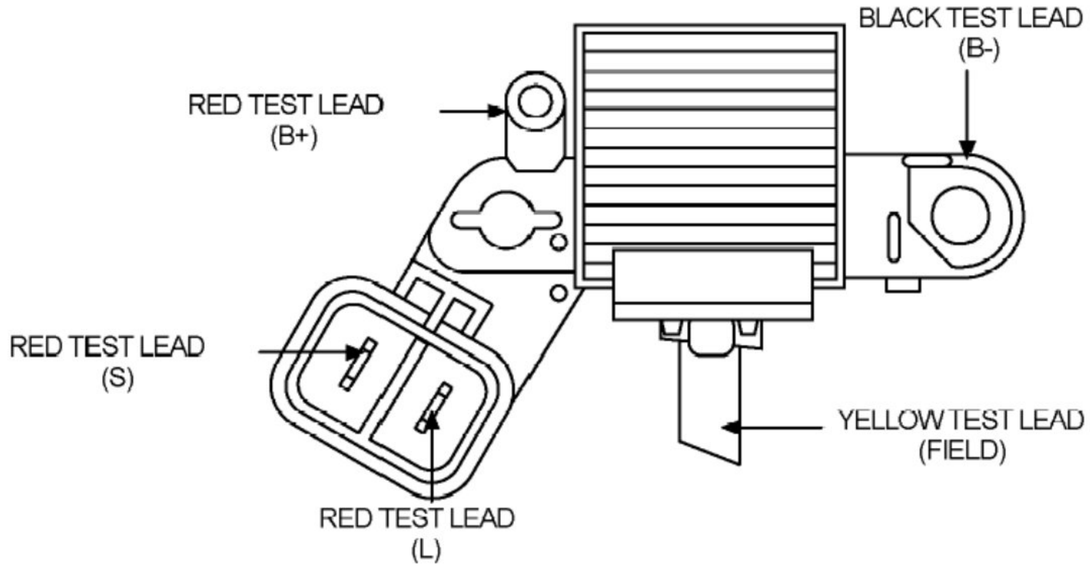

TRANSPO TESTER INSTRUCTIONS

for HITACHI type regulators

PART NO.	FLD	VOLT	SET POINT	PART NO.	FLD	VOLT	SET POINT
IH708	**A**	**24**	**28.7**				

1. POWER OFF: Set "Voltage Range" and "FLD" switches to desired setting. Connect the voltage regulator as indicated in the diagram below.

2. POWER ON: Field lamp should blink and meter will indicate approximately the set point voltage indicated in the above table.

3. ADDITIONAL TEST: Connect a red test lead to the terminal marked "C". The field lamp should still blink and the meter will indicate approximately 26.3 V.

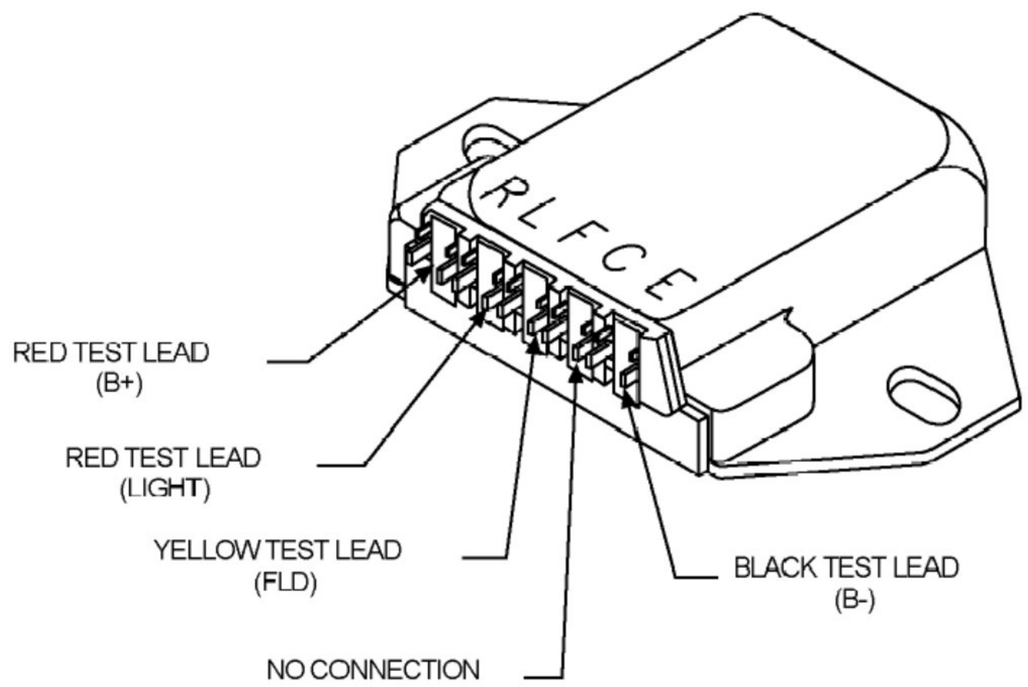

TRANSPO TESTER INSTRUCTIONS

for HITACHI type regulators

PART NO.	FLD	VOLT	SET POINT	PART NO.	FLD	VOLT	SET POINT
IH760	**A**	**12**	**14.3**				

1. POWER OFF: Set "Voltage Range" and "FLD" switches to desired setting. Connect the voltage regulator as indicated in the diagram below.

2. POWER ON: Field lamp should blink and meter will indicate approximately the set point voltage indicated in the above table.

3. ADDITIONAL TEST: Remove red test lead from terminal marked "S". Filed lamp should still blink and the meter will indicate approximately 15.5 volts.

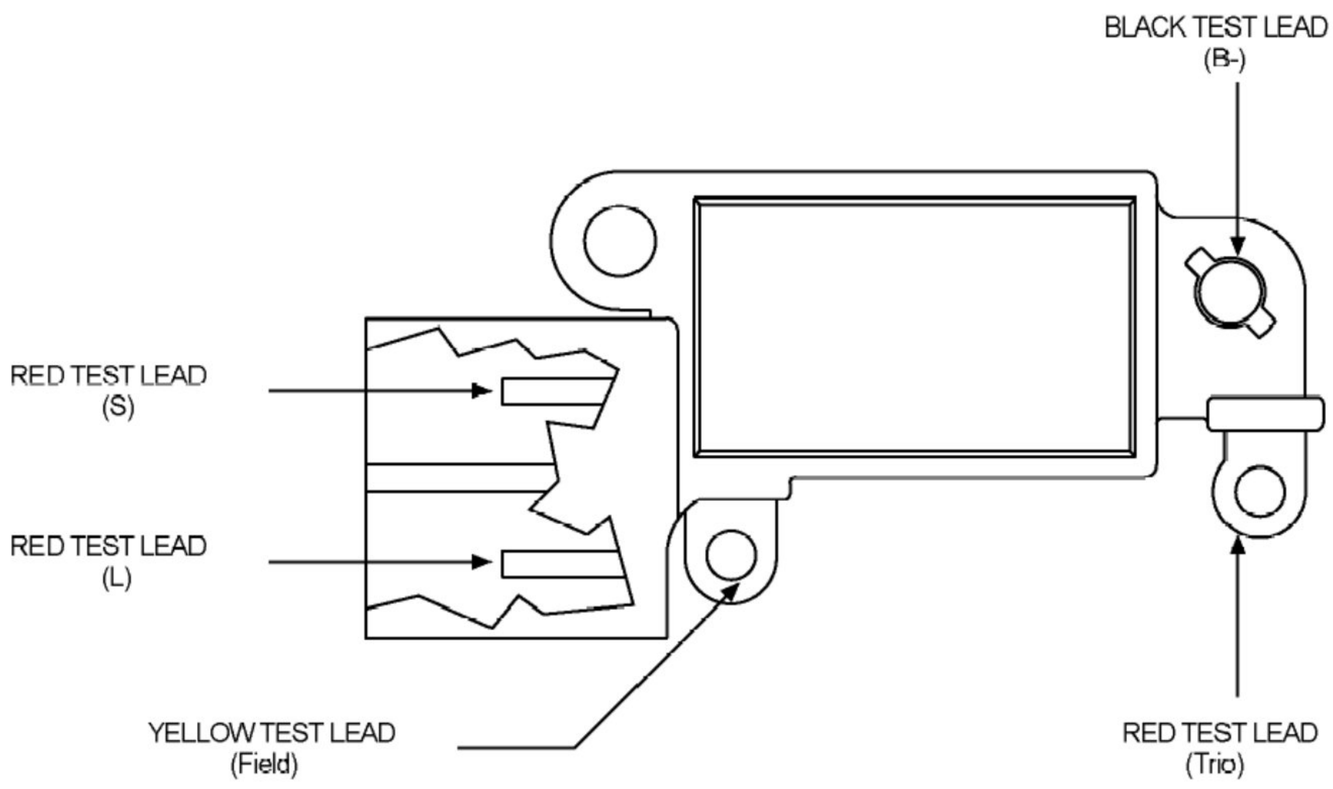

TRANSPO TESTER INSTRUCTIONS

for HITACHI type regulators

PART NO.	FLD	VOLT	SET POINT	PART NO.	FLD	VOLT	SET POINT
IH761	**A**	**12**	**14.6**				

1. POWER OFF: Set "Voltage Range" and "FLD" switches to desired setting. Connect the voltage regulator as indicated in the diagram below.

2. POWER ON: Field lamp should blink and meter will indicate approximately the set point voltage indicated in the above table.

3. ADDITIONAL TEST: Remove white test lead from terminal marked "Stator". 12V lamp should illuminate and the meter will indicate approximately 12.0 V.

Using VRC1000: To check for over Voltage, push the "Over Voltage" switch and the "Lamp Indicator" will turn on between 16.0V and 17.1V.

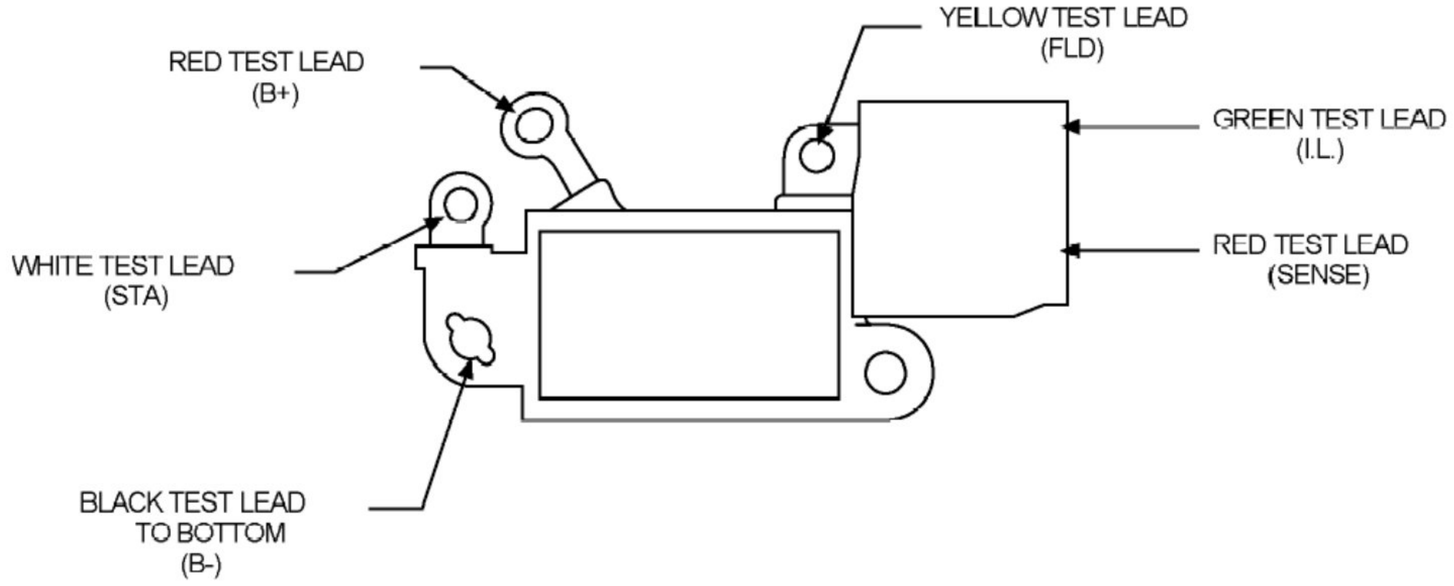

TRANSPO TESTER INSTRUCTIONS

for HITACHI type regulators

PART NO.	FLD	VOLT	SET POINT	PART NO.	FLD	VOLT	SET POINT
IH249	**A**	**12**	**14.6**				

1. POWER OFF: Set "Voltage Range" and "FLD" switches to desired setting. Connect the voltage regulator as indicated in the diagram below.

2. POWER ON: Field lamp should blink and meter will indicate approximately the set point voltage indicated in the above table.

3. ADDITIONAL TEST: Remove red test lead from terminal marked "S". Field lamp should blink and the meter will indicate approximately 15.5V.

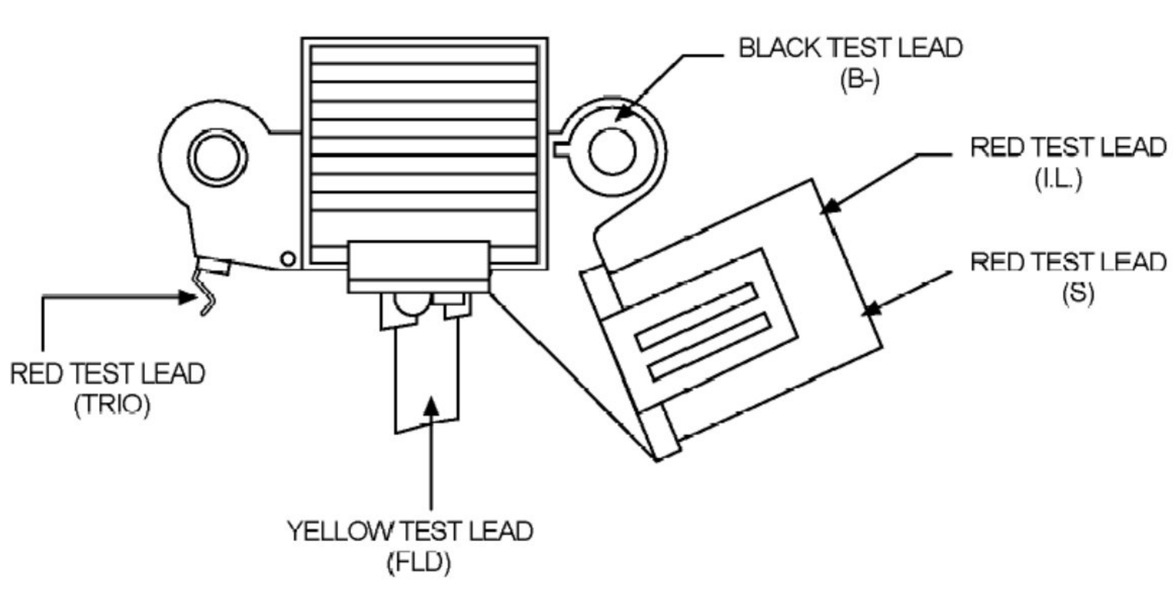

TRANSPO TESTER INSTRUCTIONS

for HITACHI type regulators

PART NO.	FLD	VOLT	SET POINT	PART NO.	FLD	VOLT	SET POINT
IH251	**A**	**12**	**14.3**				

1. POWER OFF: Set "Voltage Range" and "FLD" switches to desired setting. Connect the voltage regulator as indicated in the diagram below.

2. POWER ON: Field lamp should blink and meter will indicate approximately the set point voltage indicated in the above table.

3. ADDITIONAL TEST: Remove red test lead from terminal marked "S". Field lamp should blink and the meter will indicate approximately 15.5V.

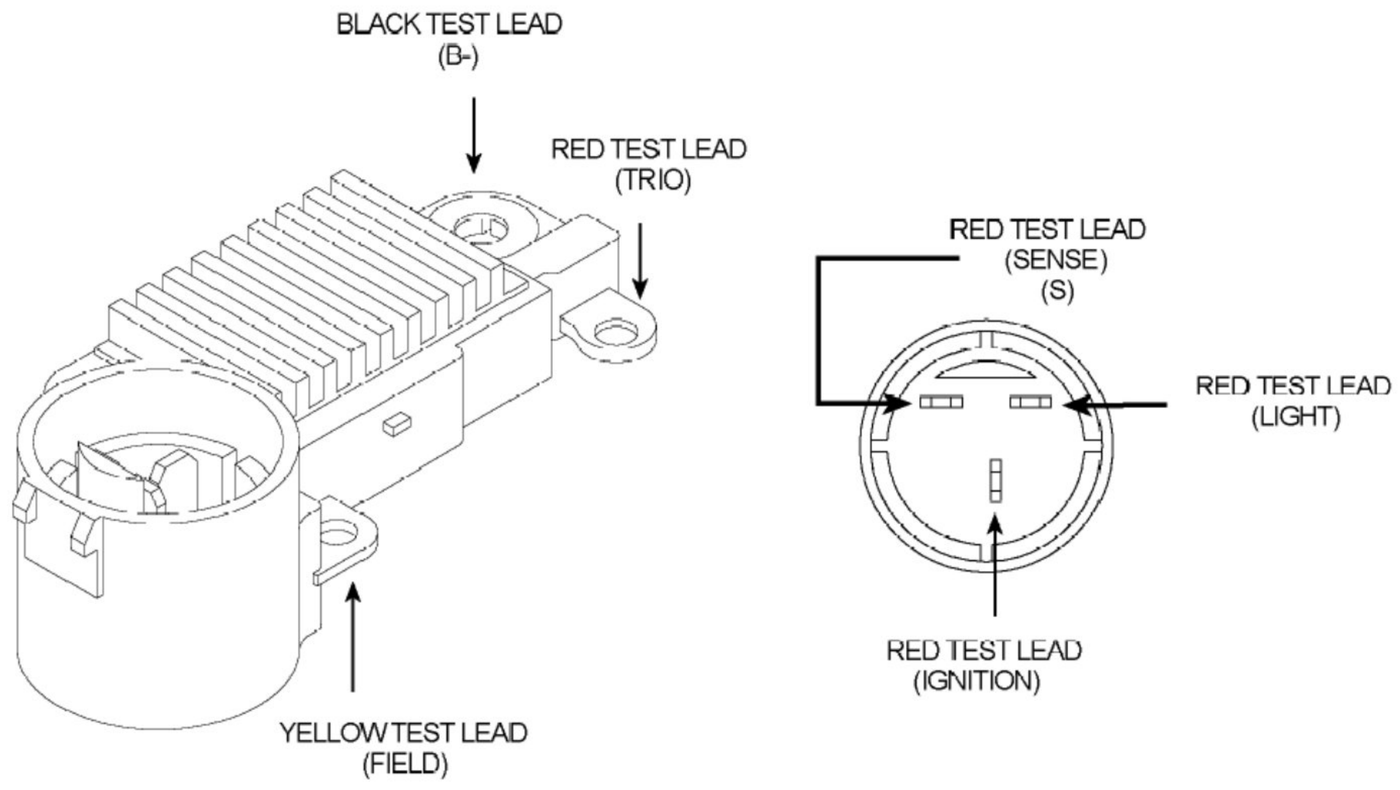

TRANSPO TESTER INSTRUCTIONS

for HITACHI type regulators

PART NO.	FLD	VOLT	SET POINT	PART NO.	FLD	VOLT	SET POINT
IH252	**A**	**12**	**14.3**				

1. POWER OFF: Set "Voltage Range" and "FLD" switches to desired setting. Connect the voltage regulator as indicated in the diagram below.

2. POWER ON: Field lamp should blink and meter will indicate approximately the set point voltage indicated in the above table.

3. ADDITIONAL TEST: Remove sense. Voltage goes to 15.6V and field light stays on.

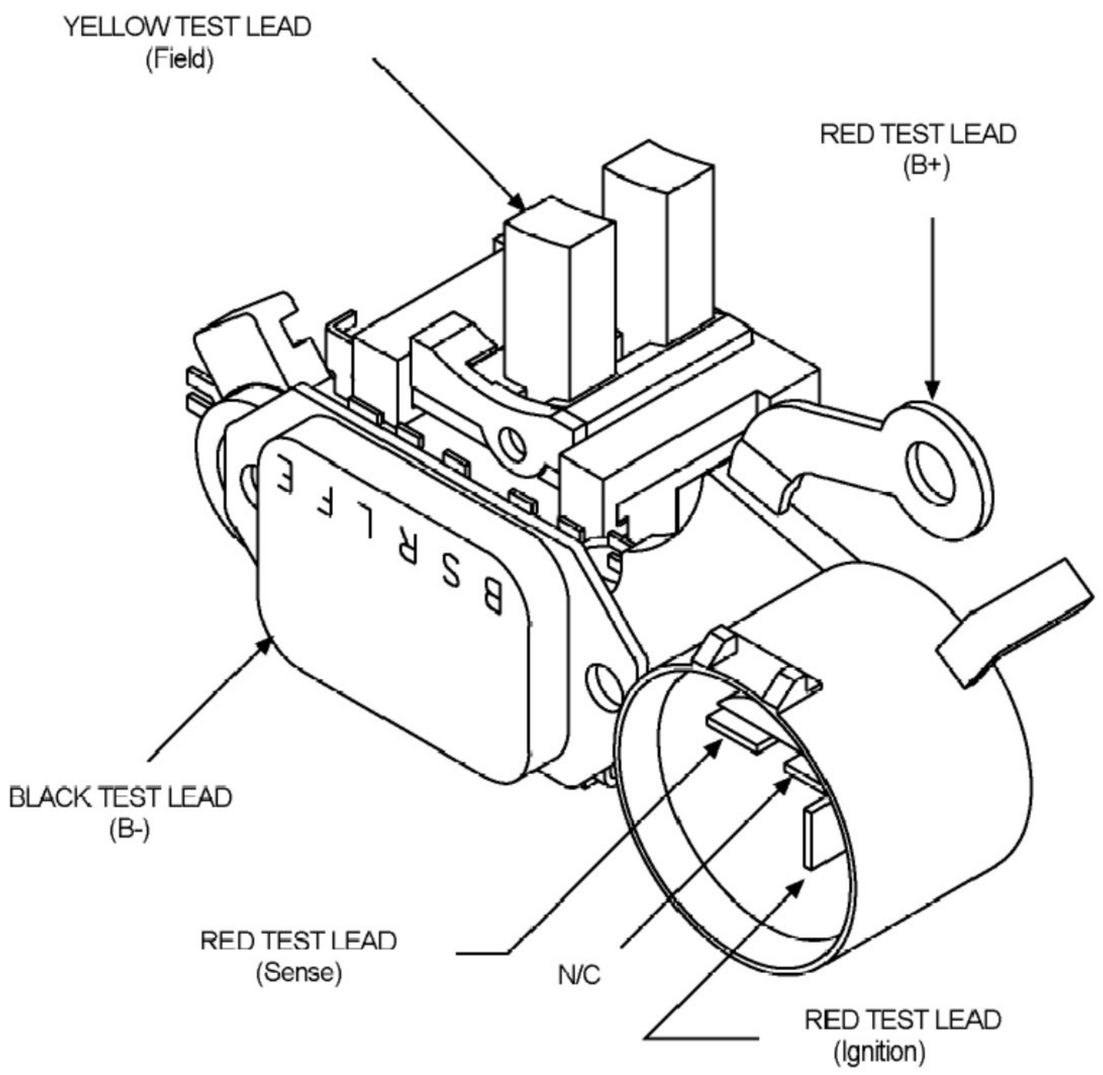

TRANSPO TESTER INSTRUCTIONS

for HITACHI type regulators

PART NO.	FLD	VOLT	SET POINT	PART NO.	FLD	VOLT	SET POINT
IH762	**A**	**12**	**14.4**				

1. POWER OFF: Set "Voltage Range" and "FLD" switches to desired setting. Connect the voltage regulator as indicated in the diagram below.

2. POWER ON: Field lamp should blink and meter will indicate approximately the set point voltage indicated in the above table.

3. ADDITIONAL TEST: Remove white test lead from terminal marked "STA". Field lamp will remain fully on and the meter should indicate 12V.

Using VRC1000: To check for over Voltage, push the "Over Voltage" switch and the "Lamp Indicator" will turn on between 16.0V and 17.1V.

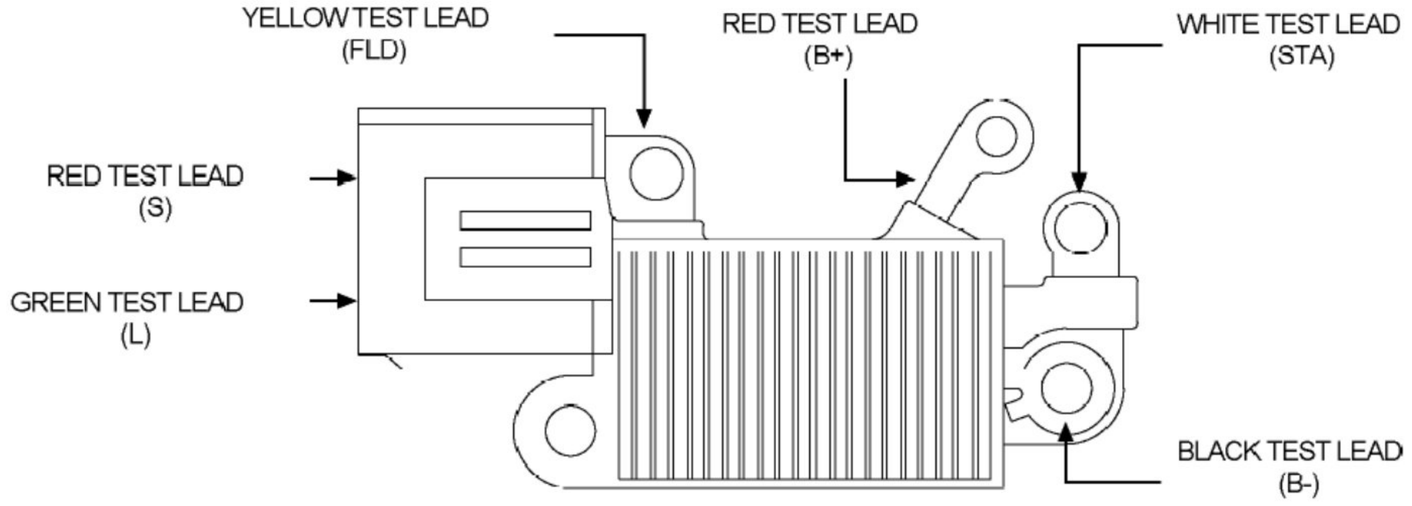

TRANSPO TESTER INSTRUCTIONS

for HITACHI type regulators

PART NO.	FLD	VOLT	SET POINT	PART NO.	FLD	VOLT	SET POINT
IH765	**A**	**12**	**14.3**				
IH767	**A**	**12**	**14.3**				

1. POWER OFF: Set "Voltage Range" and "FLD" switches to desired setting. Connect the voltage regulator as indicated in the diagram below.

2. POWER ON: Field lamp should blink and meter will indicate approximately the set point voltage indicated in the above table.

3. ADDITIONAL TEST: Remove white test lead from terminal marked "Stator". 12V lamp should illuminate and the meter will indicate approximately 12 volts.

Using VRC1000: To check for over Voltage, push the "Over Voltage" switch and the "Lamp Indicator" will turn on between 16.0V and 17.1V.

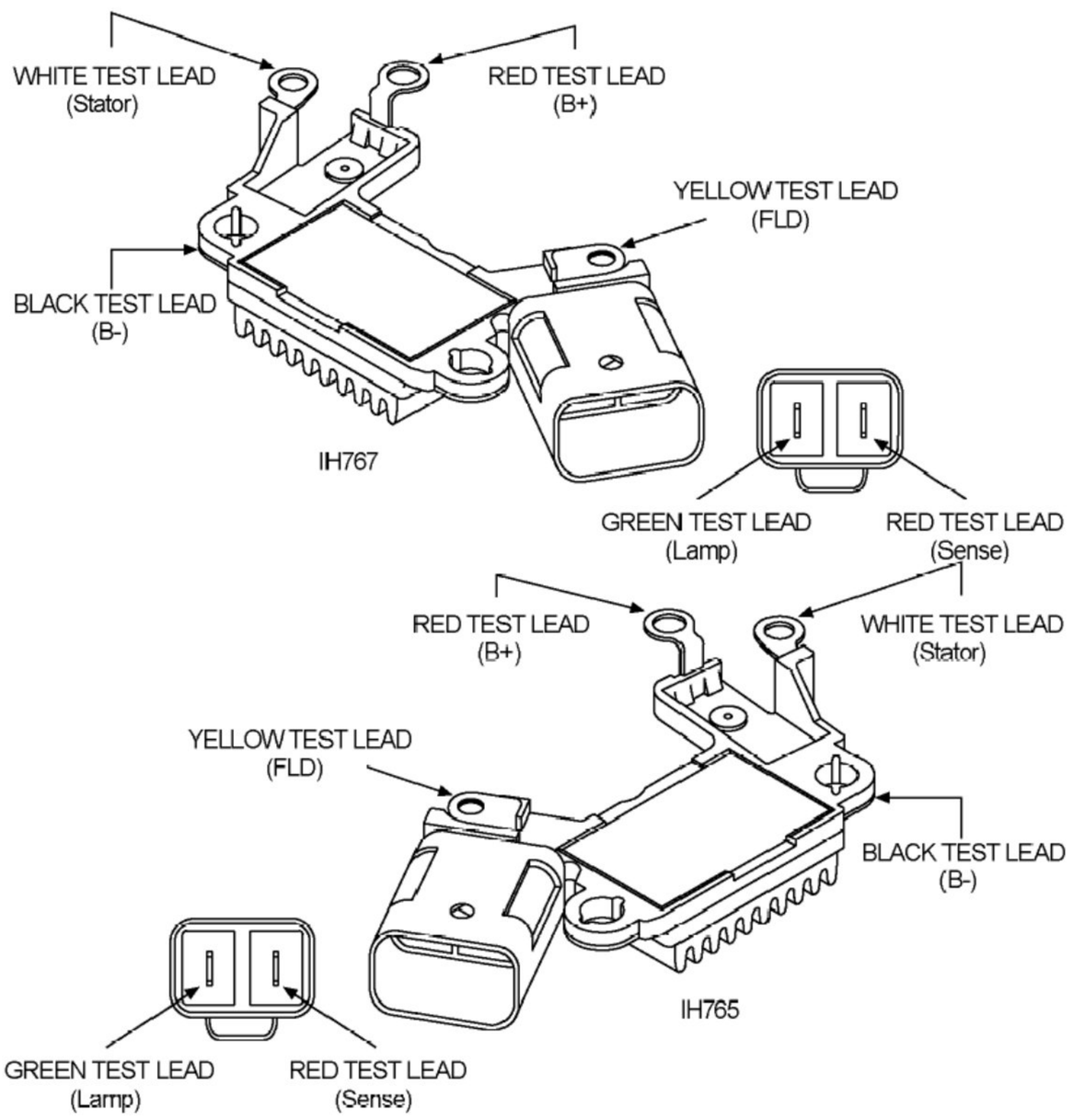

TRANSPO TESTER INSTRUCTIONS

for HITACHI type regulators

PART NO.	FLD	VOLT	SET POINT	PART NO.	FLD	VOLT	SET POINT
IH205	**A**	**12**	**14.4**				

1. POWER OFF: Set "Voltage Range" and "FLD" switches to desired setting. Connect the voltage regulator as indicated in the diagram below.

2. POWER ON: Field lamp should blink and meter will indicate approximately the set point voltage indicated in the above table.

3. ADDITIONAL TEST: Remove (Red) Sense lead, voltage should go to 15.5V.

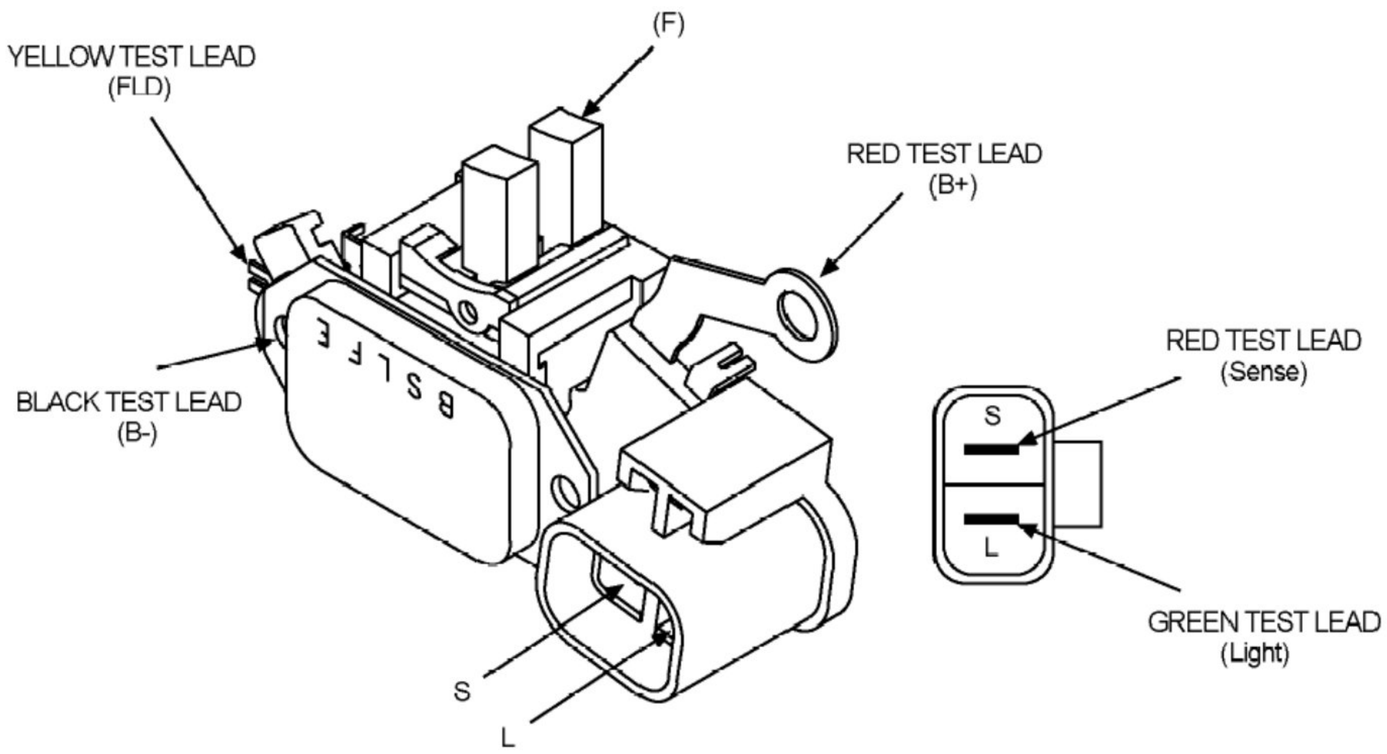

TRANSPO TESTER INSTRUCTIONS

for HITACHI type regulators

PART NO.	FLD	VOLT	SET POINT	PART NO.	FLD	VOLT	SET POINT
IH254	**A**	**12**	**14.5**				

1. POWER OFF: Set "Voltage Range" and "FLD" switches to desired setting. Connect the voltage regulator as indicated in the diagram below.

2. POWER ON: Field lamp should blink and meter will indicate approximately the set point voltage indicated in the above table.

3. ADDITIONAL TEST: Remove (Red) lead from sense , Field lamp will stay on, voltage will rise between 15.5V and 15.9V.

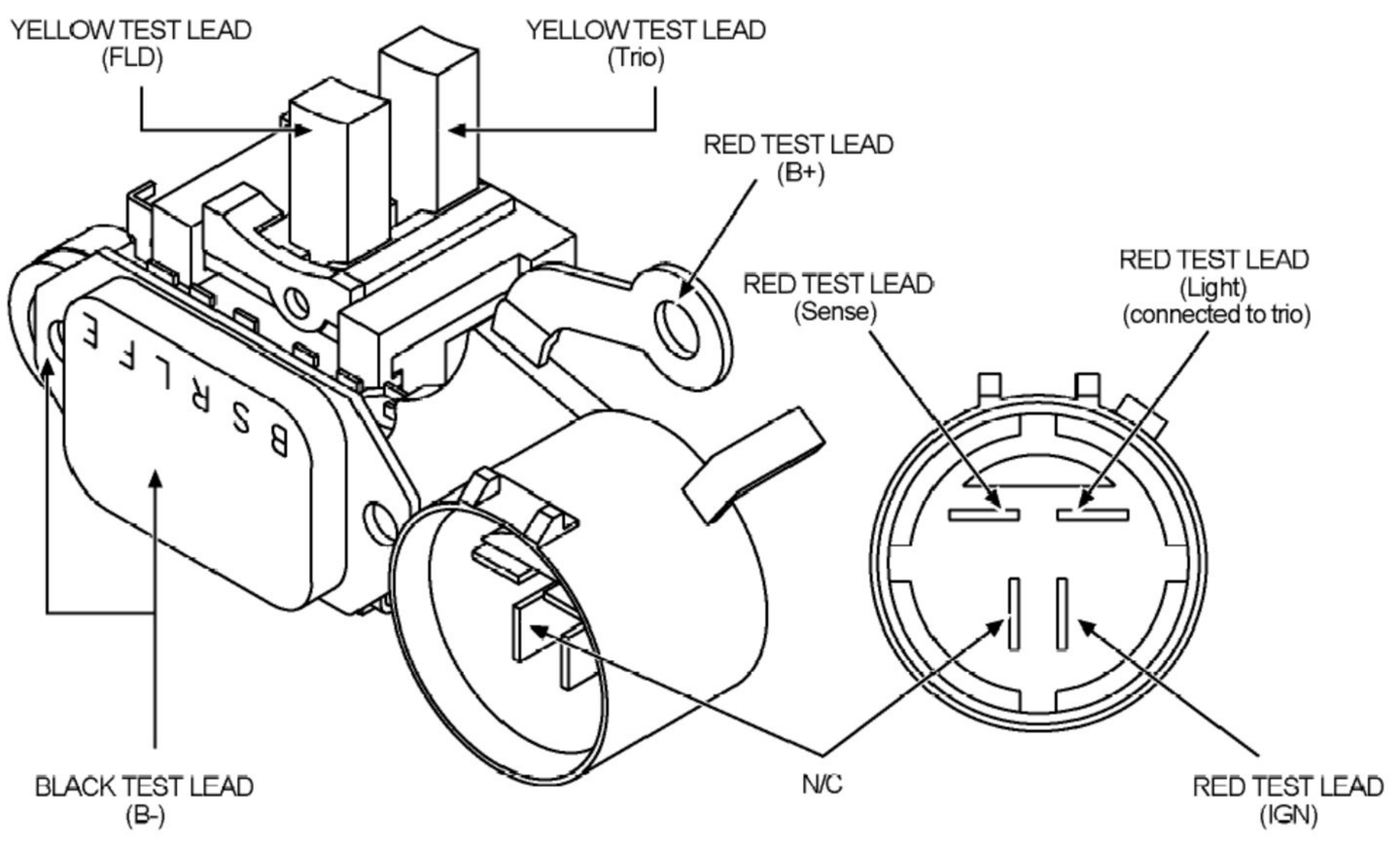

TRANSPO TESTER INSTRUCTIONS

for HITACHI type regulators

PART NO.	FLD	VOLT	SET POINT	PART NO.	FLD	VOLT	SET POINT
IH766	**A**	**12**	**14.3**				

1. POWER OFF: Set "Voltage Range" and "FLD" switches to desired setting. Connect the voltage regulator as indicated in the diagram below.

2. POWER ON: Field lamp should blink and meter will indicate approximately the set point voltage indicated in the above table.

3. ADDITIONAL TEST: Disconnect "S", Voltage stays the same , 12V lamp comes on and field lamp continues to be on and field lamp continues to be on.

Using VRC1000: To check for over Voltage, push the "Over Voltage" switch and the "Lamp Indicator" will turn on between 16.0V and 17.1V.

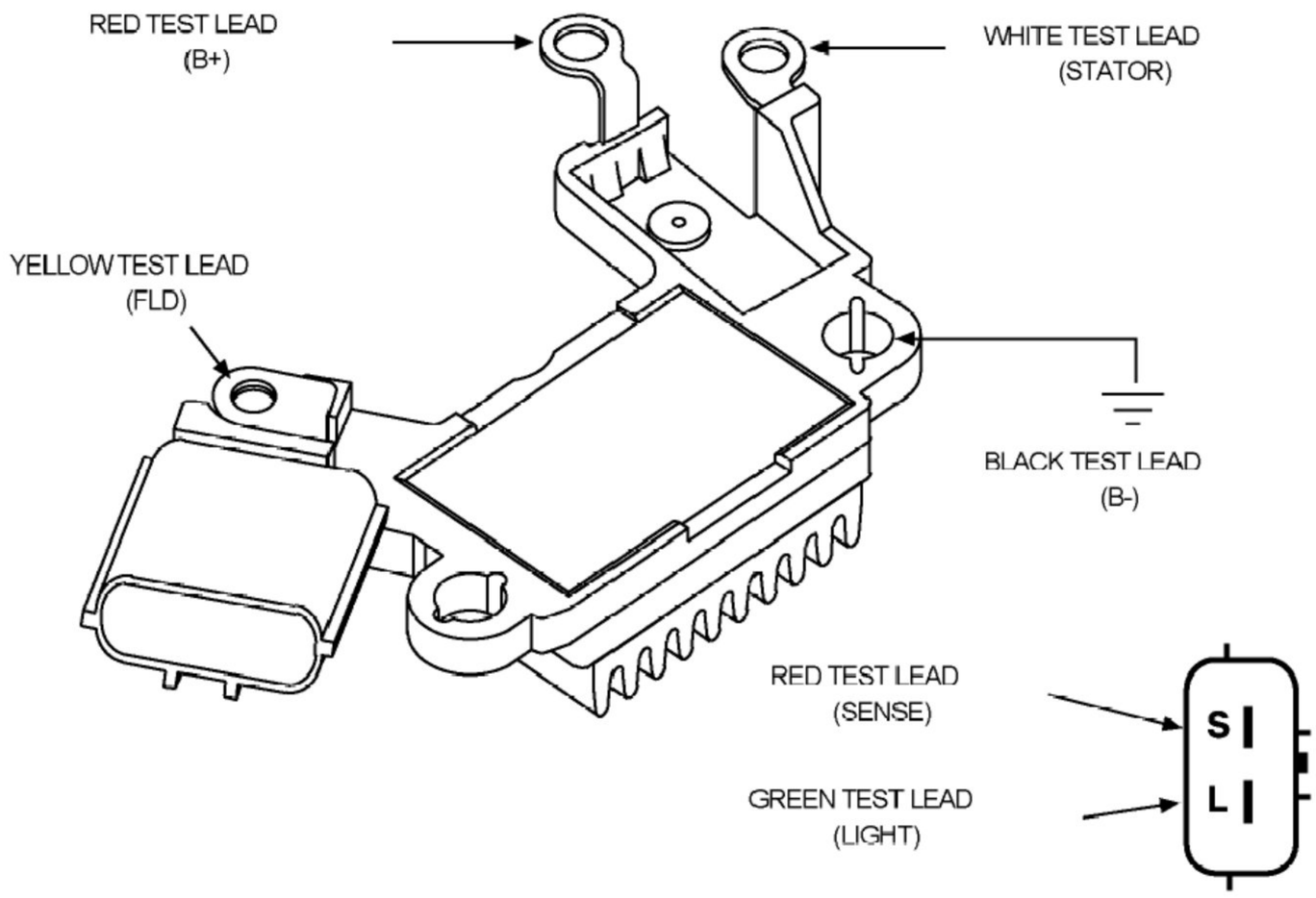

TRANSPO TESTER INSTRUCTIONS

for HITACHI type regulators

PART NO.	FLD	VOLT	SET POINT	PART NO.	FLD	VOLT	SET POINT
IH770	**A**	**12**	**14.3**				

1. POWER OFF: Set "Voltage Range" and "FLD" switches to desired setting. Connect the voltage regulator as indicated in the diagram below.

2. POWER ON: Field lamp should blink and meter will indicate approximately the set point voltage indicated in the above table.

3. ADDITIONAL TEST: Disconnect "S", voltage goes to approximately 15.2V Field lamp stays on.

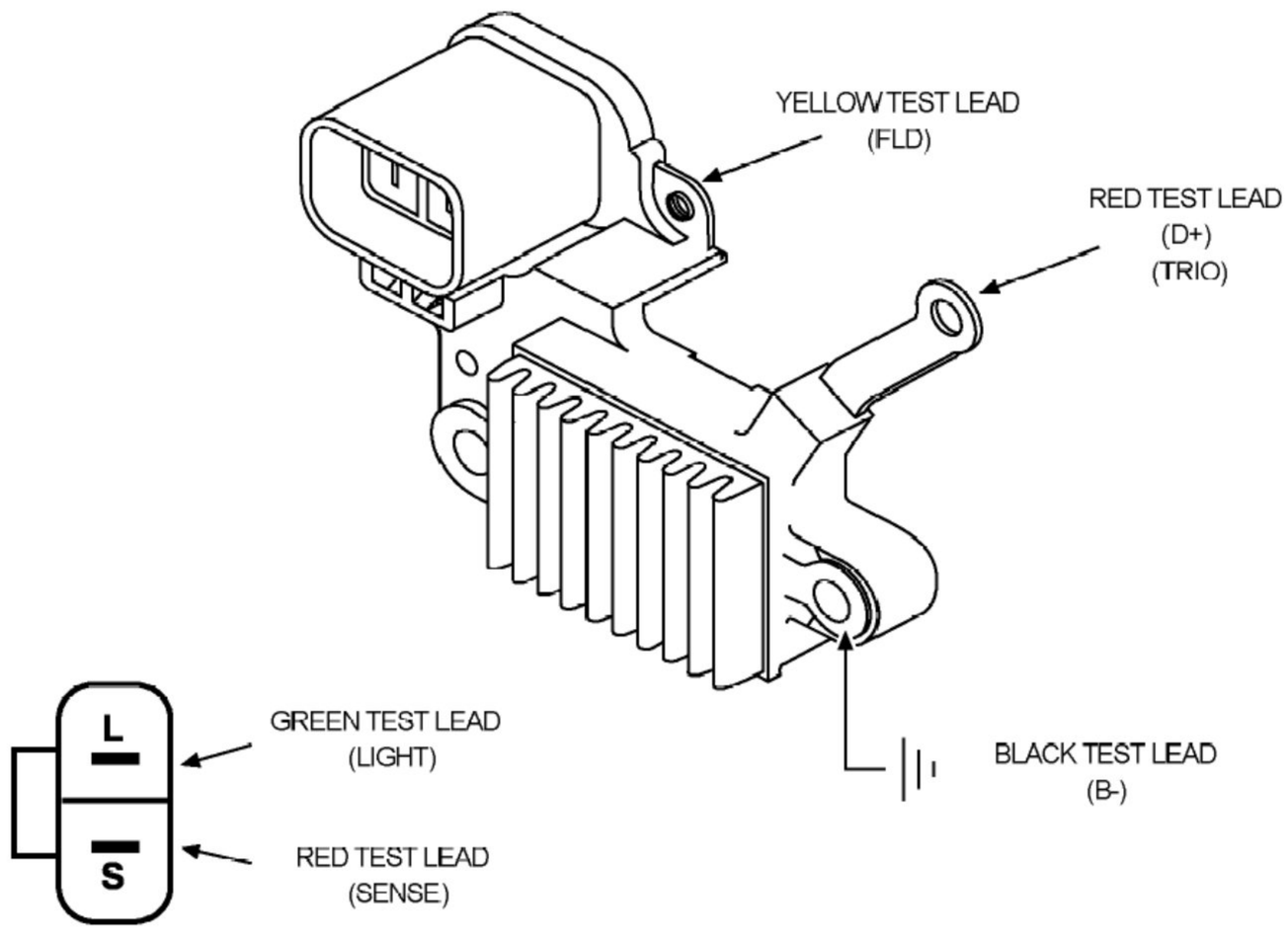

TRANSPO TESTER INSTRUCTIONS

for HITACHI type regulators

PART NO.	FLD	VOLT	SET POINT	PART NO.	FLD	VOLT	SET POINT
IH776	**A**	**12**	**14.2**				

1. POWER OFF: Set "Voltage Range" and "FLD" switches to desired setting. Connect the voltage regulator as indicated in the diagram below.

2. POWER ON: Field lamp should blink and meter will indicate approximately the set point voltage indicated in the above table.

3. ADDITIONAL TEST: Remove white lead from stator, field circuit lamp will stay on. 12V lamp will come on and voltage will drop to 12V.

Using VRC1000: To check for over Voltage, push the "Over Voltage" switch and the "Lamp Indicator" will turn on between 16.0V and 17.1V.

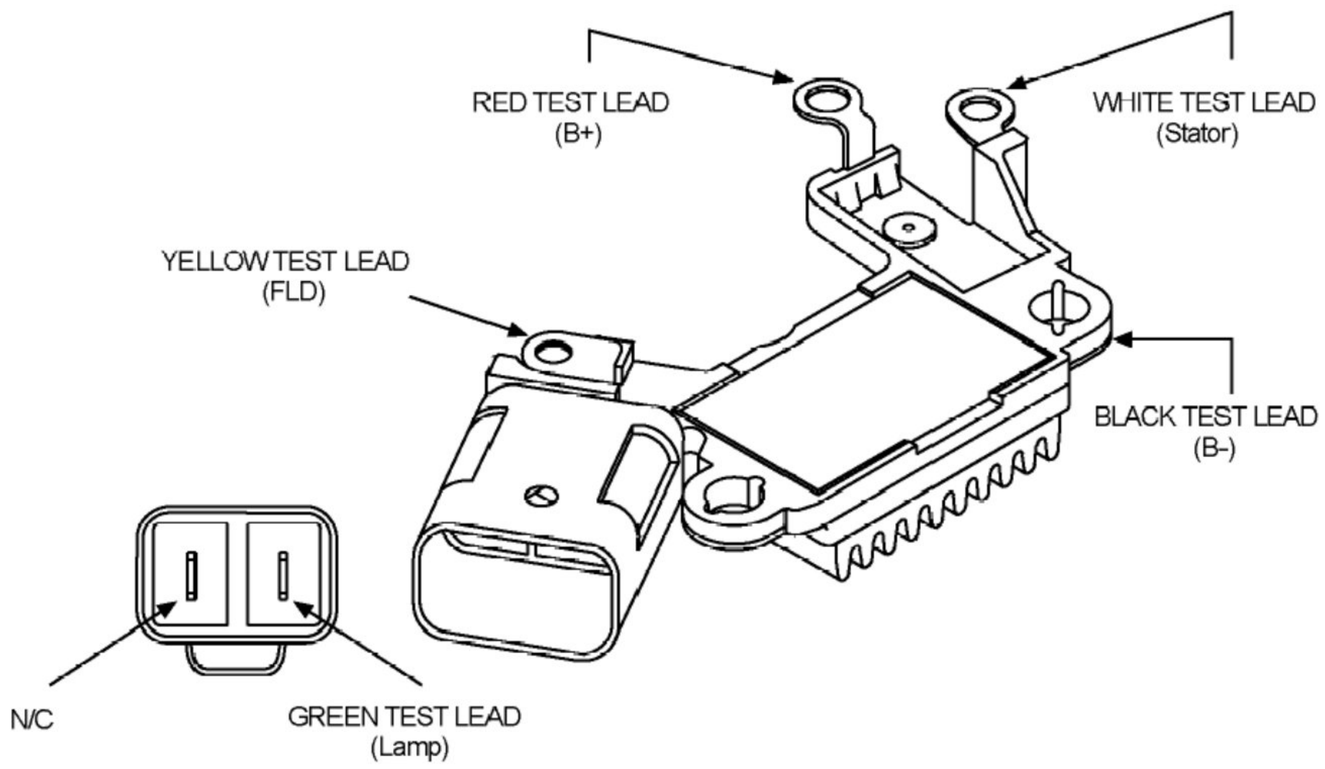

TRANSPO TESTER INSTRUCTIONS

for HITACHI type regulators

PART NO.	FLD	VOLT	SET POINT	PART NO.	FLD	VOLT	SET POINT
IH782	**A**	**12**	**14.3**				

1. POWER OFF: Set "Voltage Range" and "FLD" switches to desired setting. Connect the voltage regulator as indicated in the diagram below.

2. POWER ON: Field lamp should blink and meter will indicate approximately the set point voltage indicated in the above table.

3. ADDITIONAL TEST: Disconnect (white) lead from stator, voltage drops to 12V and lamp comes on. Disconnect (Red) lead from sense, lamp comes on and rises to 15.5V.

Using VRC1000: To check for over Voltage, push the "Over Voltage" switch and the "Lamp Indicator" will turn on between 16.0V and 17.1V.

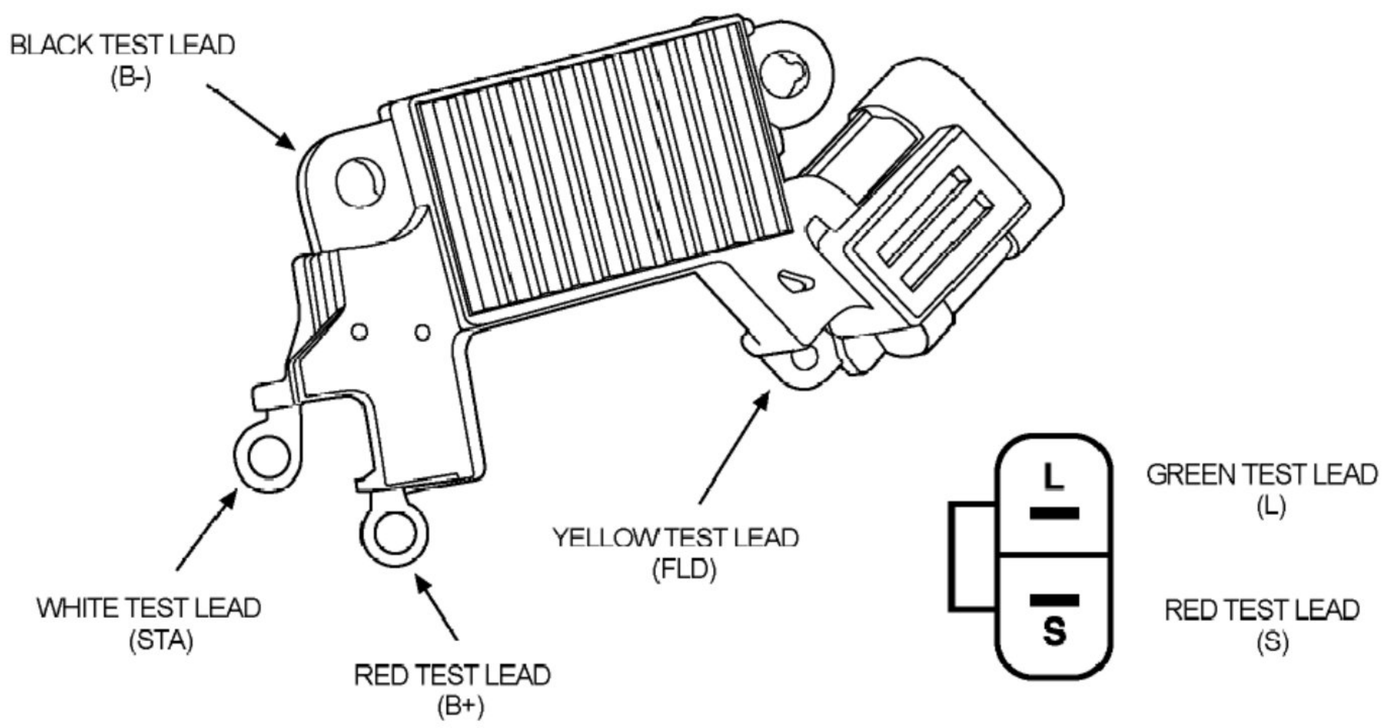

TRANSPO TESTER INSTRUCTIONS

for HITACHI type regulators

PART NO.	FLD	VOLT	SET POINT	PART NO.	FLD	VOLT	SET POINT
IH763	**A**	**12**	**14.2**				

1. POWER OFF: Set "Voltage Range" and "FLD" switches to desired setting. Connect the voltage regulator as indicated in the diagram below.

2. POWER ON: Field lamp should blink and meter will indicate approximately the set point voltage indicated in the above table.

3. ADDITIONAL TEST: Remove red lead from terminal marked "S" and voltage will rise to approximately 15.5V. Remove stator and lamp comes on and voltage drops to 12V.

Using VRC1000: To check for over Voltage, push the "Over Voltage" switch and the "Lamp Indicator" will turn on between 16.0V and 17.1V.

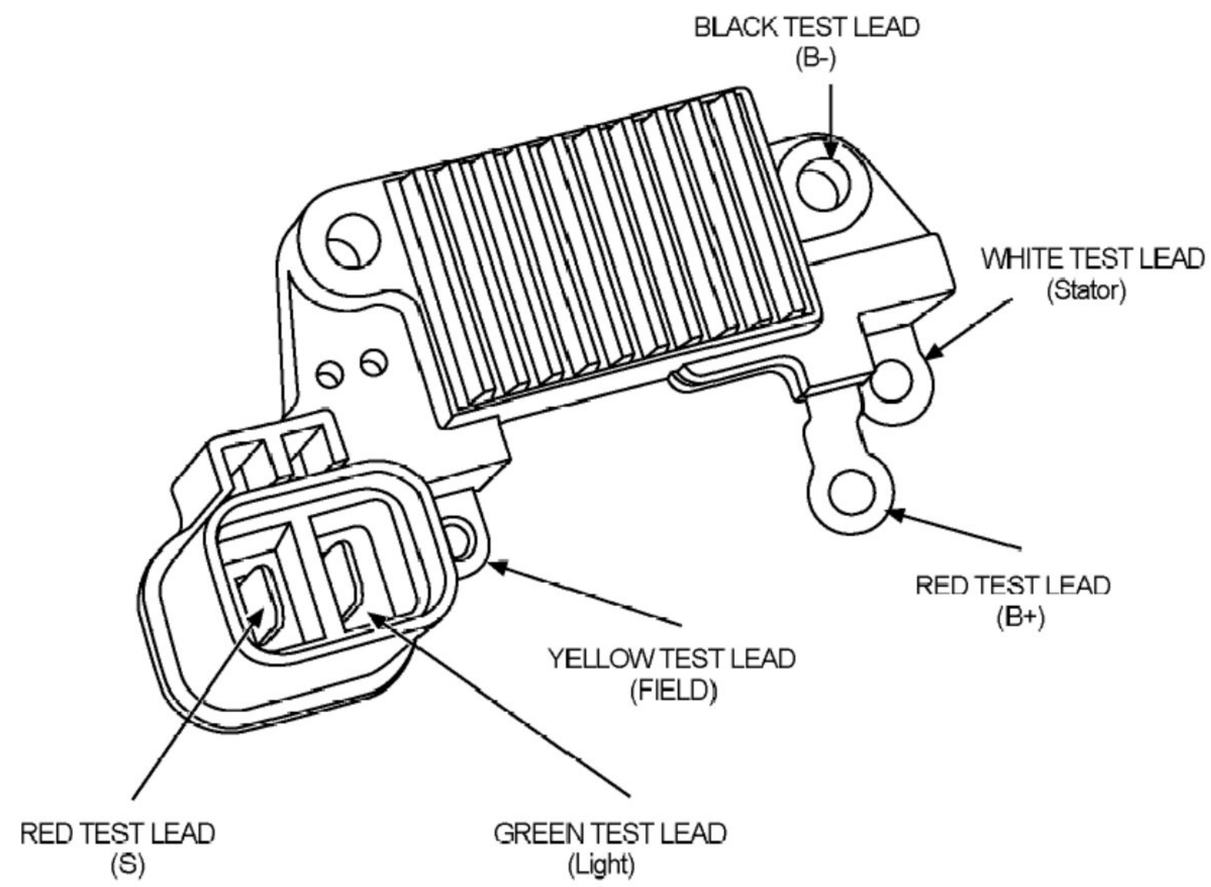

TRANSPO TESTER INSTRUCTIONS

for HITACHI type regulators

PART NO.	FLD	VOLT	SET POINT	PART NO.	FLD	VOLT	SET POINT
IH772	**A**	**12**	**14.3**				

1. POWER OFF: Set "Voltage Range" and "FLD" switches to desired setting. Connect the voltage regulator as indicated in the diagram below.

2. POWER ON: Field lamp should blink and meter will indicate approximately the set point voltage indicated in the above table.

3. ADDITIONAL TEST: Remove stator and lamp comes on. Apply ground to "C" Terminal and voltage will drop to 12.5 volts.

Using VRC1000: To check for over Voltage, push the "Over Voltage" switch and the "Lamp Indicator" will turn on between 16.0V and 17.1V. Push the choke drive and the "Choke Drive Indicator Lamp" will turn on, if present.

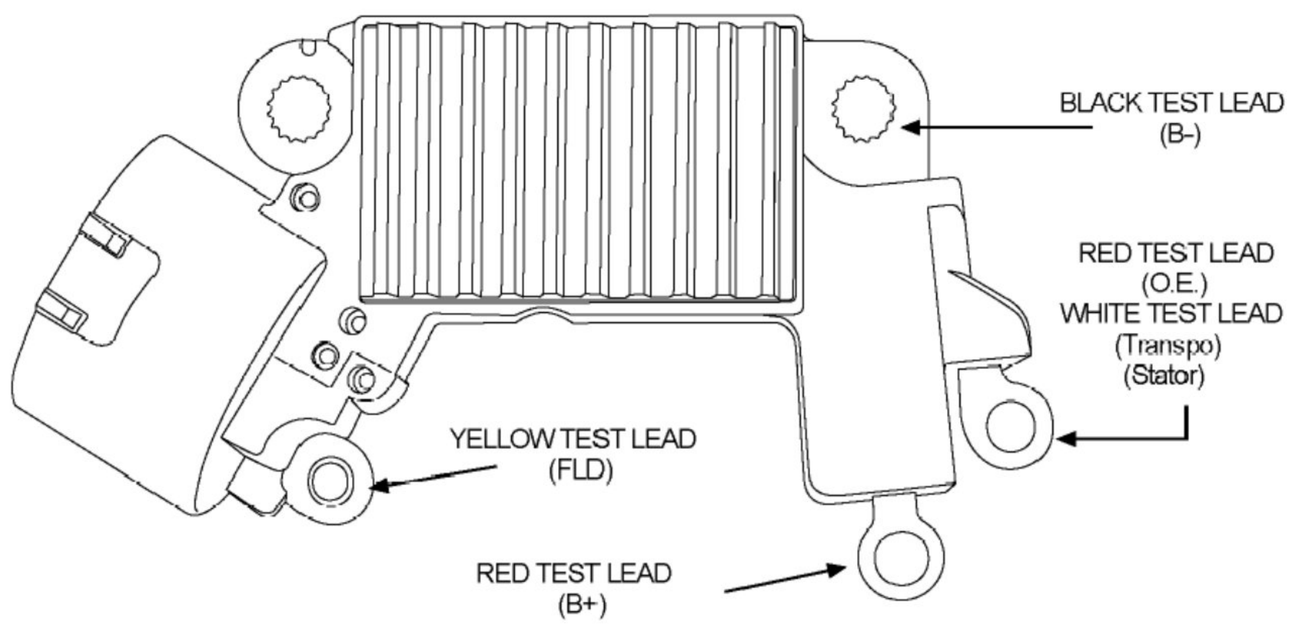

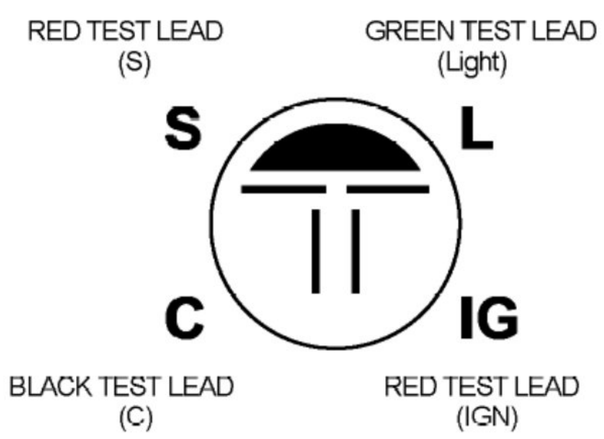

TRANSPO TESTER INSTRUCTIONS

for HITACHI type regulators

PART NO.	FLD	VOLT	SET POINT	PART NO.	FLD	VOLT	SET POINT
IH258	**A**	**12**	**14.4**				

1. POWER OFF: Set "Voltage Range" and "FLD" switches to desired setting. Connect the voltage regulator as indicated in the diagram below.

2. POWER ON: Field lamp should blink and meter will indicate approximately the set point voltage indicated in the above table.

3. ADDITIONAL TEST:

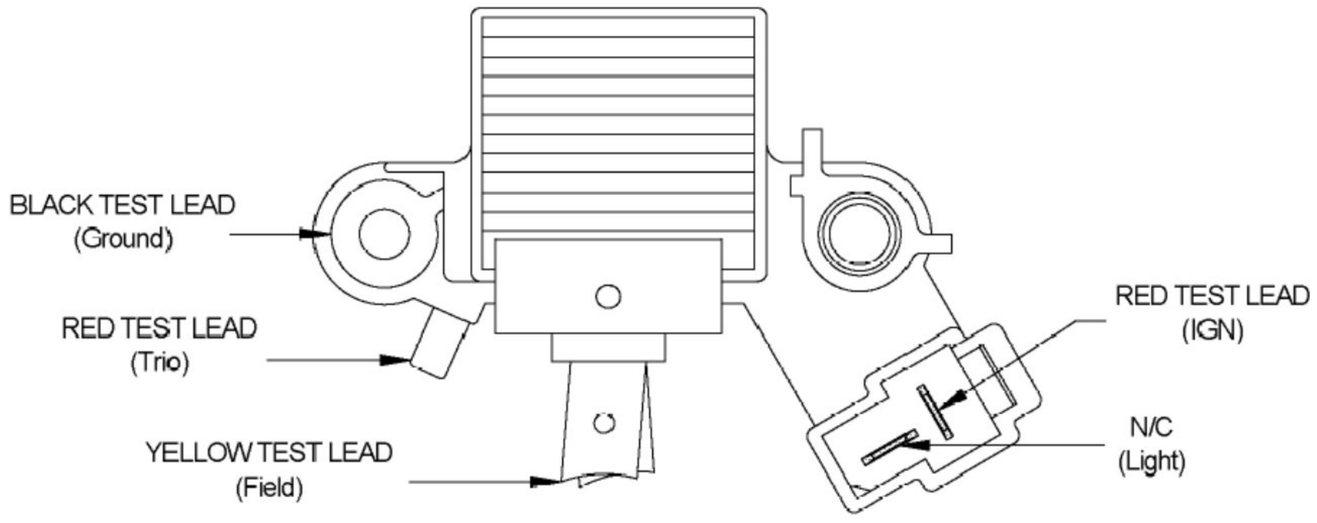

TRANSPO TESTER INSTRUCTIONS

for HITACHI type regulators

PART NO.	FLD	VOLT	SET POINT	PART NO.	FLD	VOLT	SET POINT
IH769	**A**	**12**	**14.4**				

1. POWER OFF: Set "Voltage Range" and "FLD" switches to desired setting. Connect the voltage regulator as indicated in the diagram below.

2. POWER ON: Field lamp should blink and meter will indicate approximately the set point voltage indicated in the above table.

3. ADDITIONAL TEST: Remove white lead from stator; 12 volt lamp will come on and voltage will read 12.0 volts. Field lamp will be on.

Using VRC1000: To check for over Voltage, push the "Over Voltage" switch and the "Lamp Indicator" will turn on between 16.0V and 17.1V.

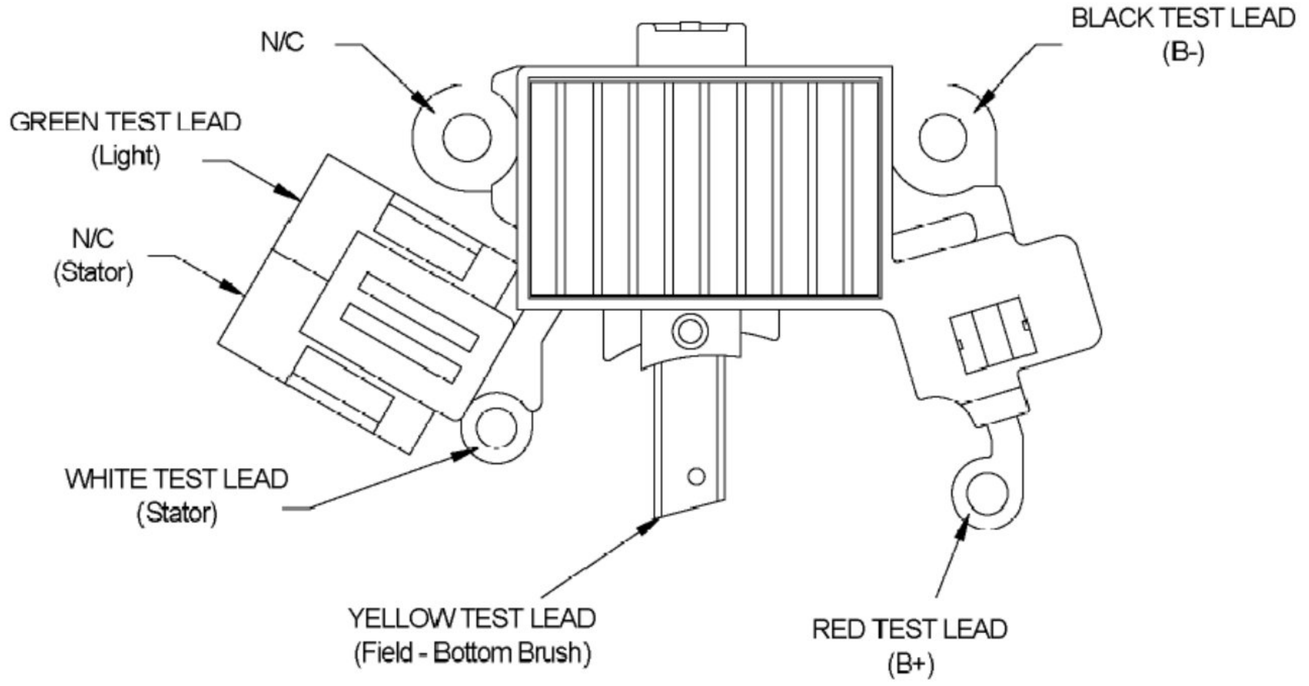

TRANSPO TESTER INSTRUCTIONS

for HITACHI type regulators

PART NO.	FLD	VOLT	SET POINT	PART NO.	FLD	VOLT	SET POINT
IH744	**A**	**12.0**	**14.4**				

1. POWER OFF: Set "Voltage Range" and "FLD" switches to desired setting. Connect the voltage regulator as indicated in the diagram below.

2. POWER ON: Field lamp should blink and meter will indicate approximately the set point voltage indicated in the above table.

3. ADDITIONAL TEST: Remove sense lead and voltage rises to approximately 15.5 volts, reconnect sense lead. Remove white test lead from stator, 12 volt lamp comes on, voltage drops to 12 volts and field LED stays on (soft start).

Using VRC1000: To check for over Voltage, push the "Over Voltage" switch and the "Lamp Indicator" will turn on between 16.0V and 17.1V.

NEEDS TO BE RE-TESTED
FOR PROPER TEST LEAD CALL OUTS.

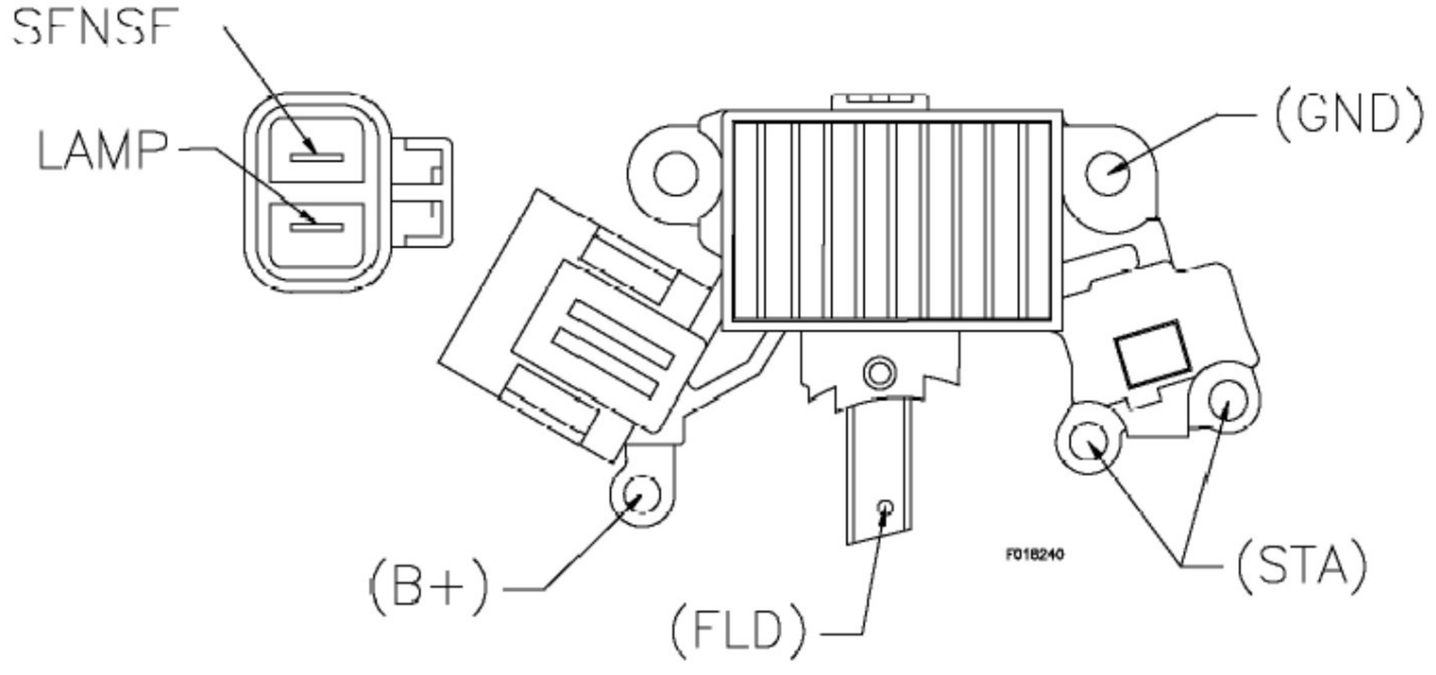

TRANSPO TESTER INSTRUCTIONS

for HITACHI type regulators

PART NO.	FLD	VOLT	SET POINT	PART NO.	FLD	VOLT	SET POINT
IH738	**A**	**12**	**14.5**				

1. POWER OFF: Set "Voltage Range" and "FLD" switches to desired setting. Connect the voltage regulator as indicated in the diagram below.

2. POWER ON: Field lamp should blink and meter will indicate approximately the set point voltage indicated in the above table.

3. ADDITIONAL TEST: Remove sense lead and voltage rises to approximately 15.5 volts, reconnect sense lead. Remove white test lead from stator, 12 volt lamp comes on, voltage drops to 12 volts and field LED stays on (soft start).

Using VRC1000: To check for over Voltage, push the "Over Voltage" switch and the "Lamp Indicator" will turn on between 16.0V and 17.1V.

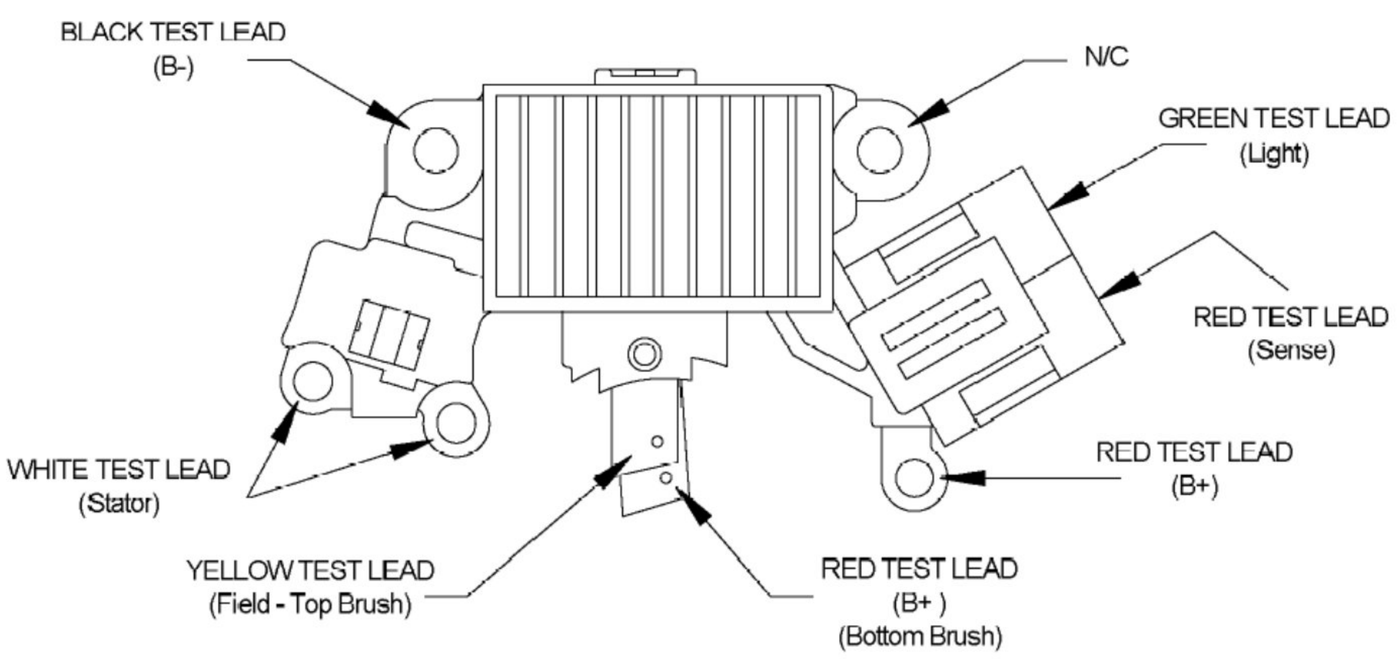

TRANSPO TESTER INSTRUCTIONS

for HITACHI type regulators

PART NO.	FLD	VOLT	SET POINT	PART NO.	FLD	VOLT	SET POINT
IH774	**A**	**12**	**14.4**				

1. POWER OFF: Set "Voltage Range" and "FLD" switches to desired setting. Connect the voltage regulator as indicated in the diagram below.

2. POWER ON: Field lamp should blink and meter will indicate approximately the set point voltage indicated in the above table.

3. ADDITIONAL TEST: Remove white lead from stator, field circuit lamp will stay on. 12V lamp will come on and voltage will drop to 12V.

Using VRC1000: To check for over Voltage, push the "Over Voltage" switch and the "Lamp Indicator" will turn on between 16.0V and 17.1V.

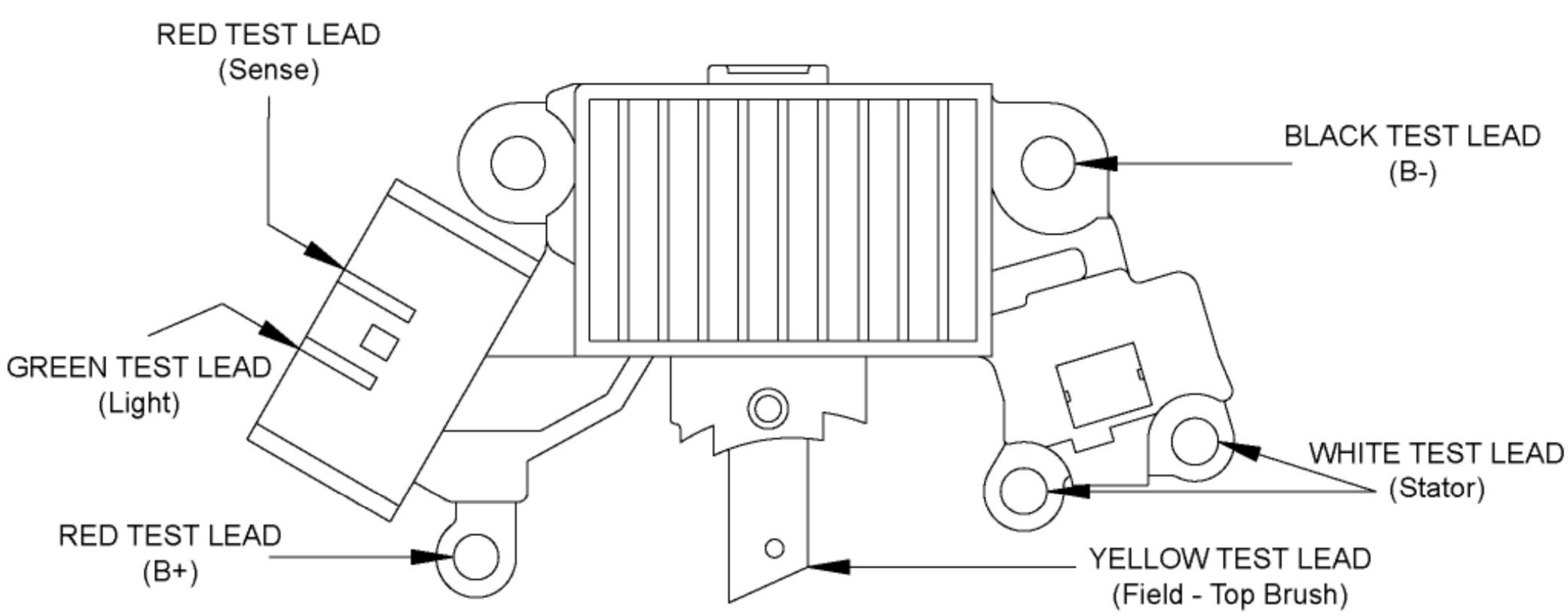

TRANSPO TESTER INSTRUCTIONS

for HITACHI type regulators

PART NO.	FLD	VOLT	SET POINT	PART NO.	FLD	VOLT	SET POINT
IH742	**A**	**12**	**14.3**				

1. POWER OFF: Set "Voltage Range" and "FLD" switches to desired setting. Connect the voltage regulator as indicated in the diagram below.

2. POWER ON: Field lamp should blink and meter will indicate approximately the set point voltage indicated in the above table.

3. ADDITIONAL TEST: Remove sense lead and voltage rises to approximately 15.5 volts, reconnect sense lead. Remove white test lead from stator, voltage remains the same and lamp comes on.
Using VRC1000: To check for over Voltage, push the "Over Voltage" switch and the "Lamp Indicator" will turn on between 16.0V and 17.1V.

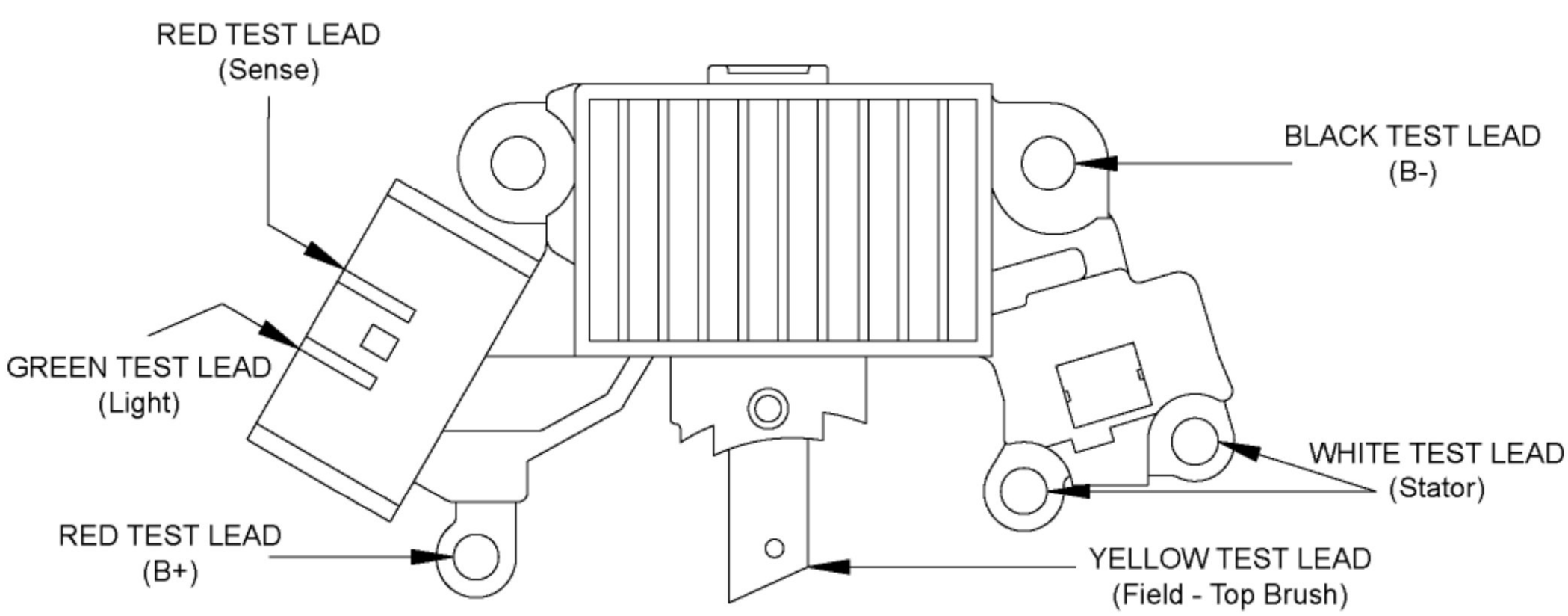

TRANSPO TESTER INSTRUCTIONS

for HITACHI type regulators

PART NO.	FLD	VOLT	SET POINT	PART NO.	FLD	VOLT	SET POINT
IH758	**A**	**12**	**14.4**				

1. POWER OFF: Set "Voltage Range" and "FLD" switches to desired setting. Connect the voltage regulator as indicated in the diagram below.

2. POWER ON: Field lamp should blink and meter will indicate approximately the set point voltage indicated in the above table.

3. ADDITIONAL TEST:

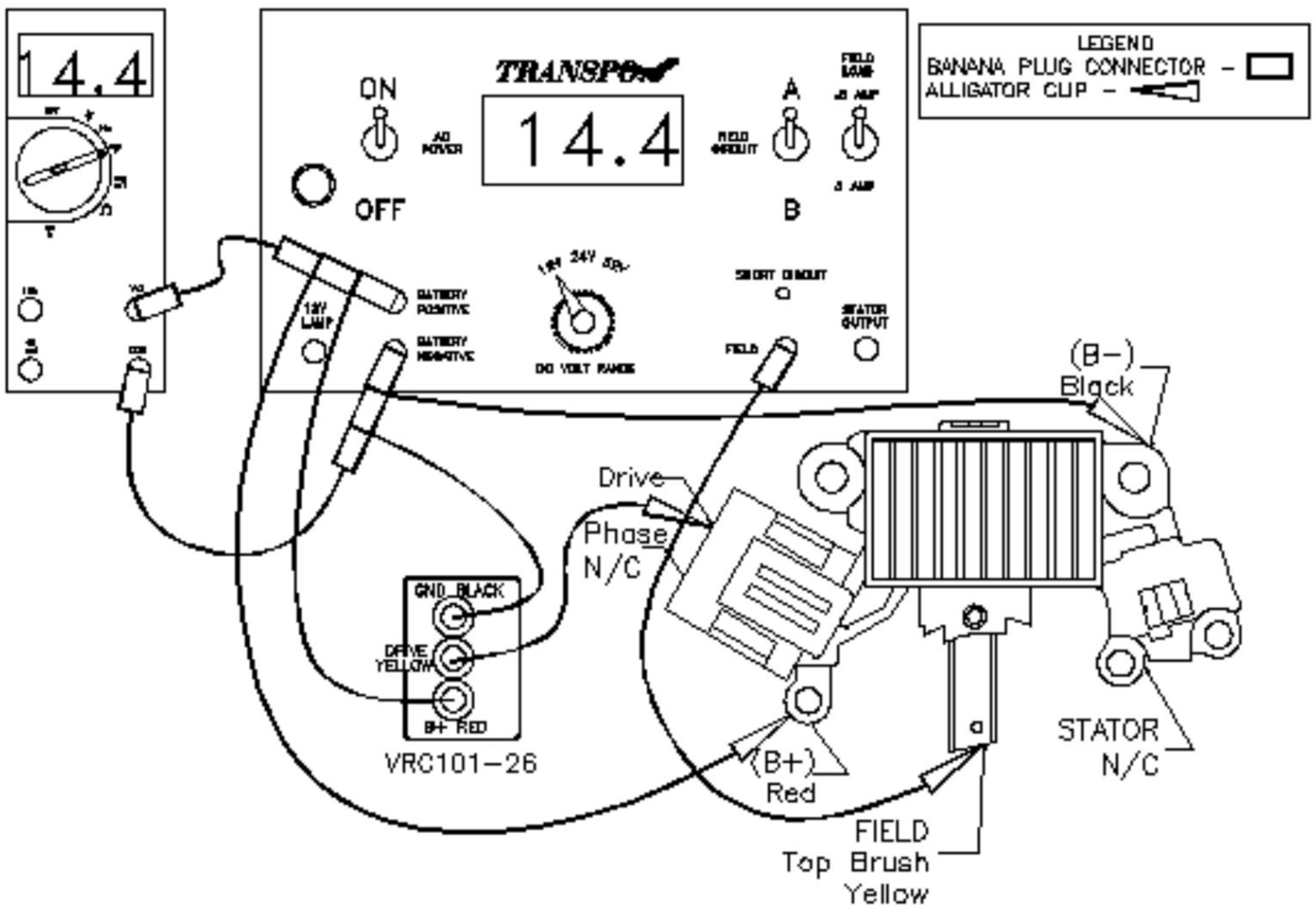

TRANSPO TESTER INSTRUCTIONS

for ISKRA type regulators

PART NO.	FLD	VOLT	SET POINT	PART NO.	FLD	VOLT	SET POINT
IK404	**A**	**24**	**28.0**				

1. POWER OFF: Set "Voltage Range" and "FLD" switches to desired setting. Connect the voltage regulator as indicated in the diagram below.

2. POWER ON: Field lamp should blink and meter will indicate approximately the set point voltage indicated in the above table.

3. ADDITIONAL TEST:

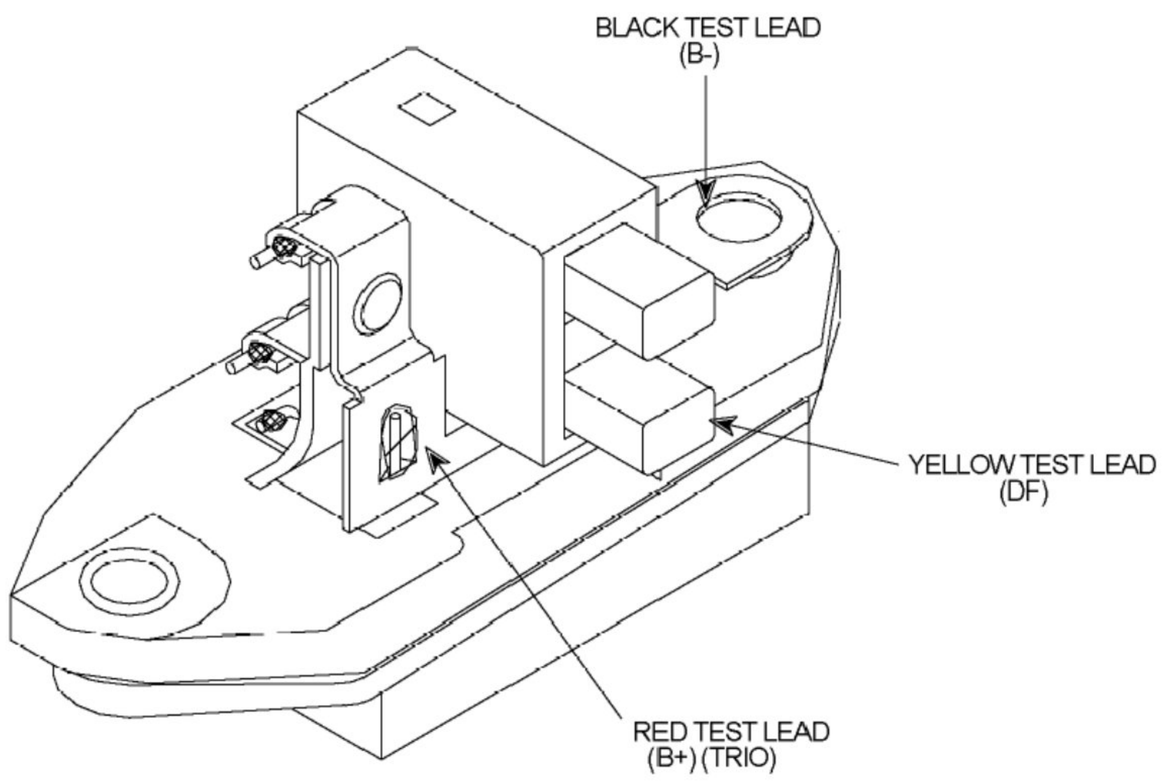

TRANSPO TESTER INSTRUCTIONS

for ISKRA type regulators

PART NO.	FLD	VOLT	SET POINT	PART NO.	FLD	VOLT	SET POINT
IK401	**A**	**12**	**14.4**				

1. POWER OFF: Set "Voltage Range" and "FLD" switches to desired setting. Connect the voltage regulator as indicated in the diagram below.

2. POWER ON: Field lamp should blink and meter will indicate approximately the set point voltage indicated in the above table.

3. ADDITIONAL TEST:

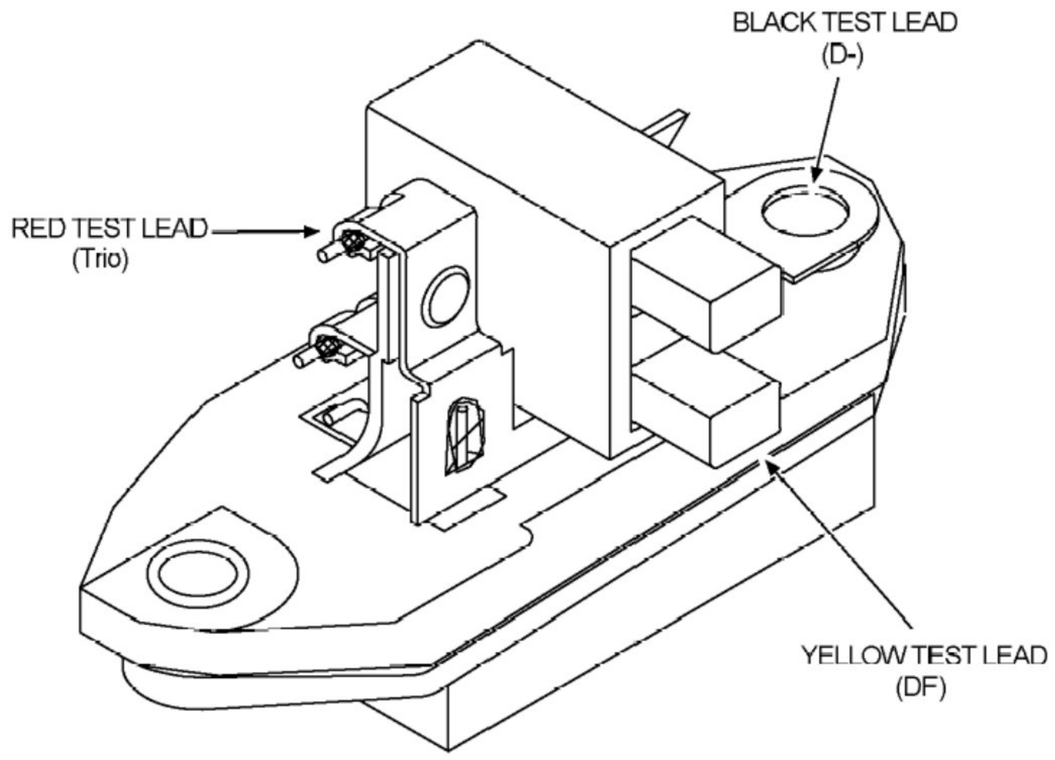

TRANSPO TESTER INSTRUCTIONS

for LADA type regulators

PART NO.	FLD	VOLT	SET POINT	PART NO.	FLD	VOLT	SET POINT
IR674	**A**	**12**	**14.6**				

1. POWER OFF: Set "Voltage Range" and "FLD" switches to desired setting. Connect the voltage regulator as indicated in the diagram below.

2. POWER ON: Field lamp should blink and meter will indicate approximately the set point voltage indicated in the above table.

3. ADDITIONAL TEST:

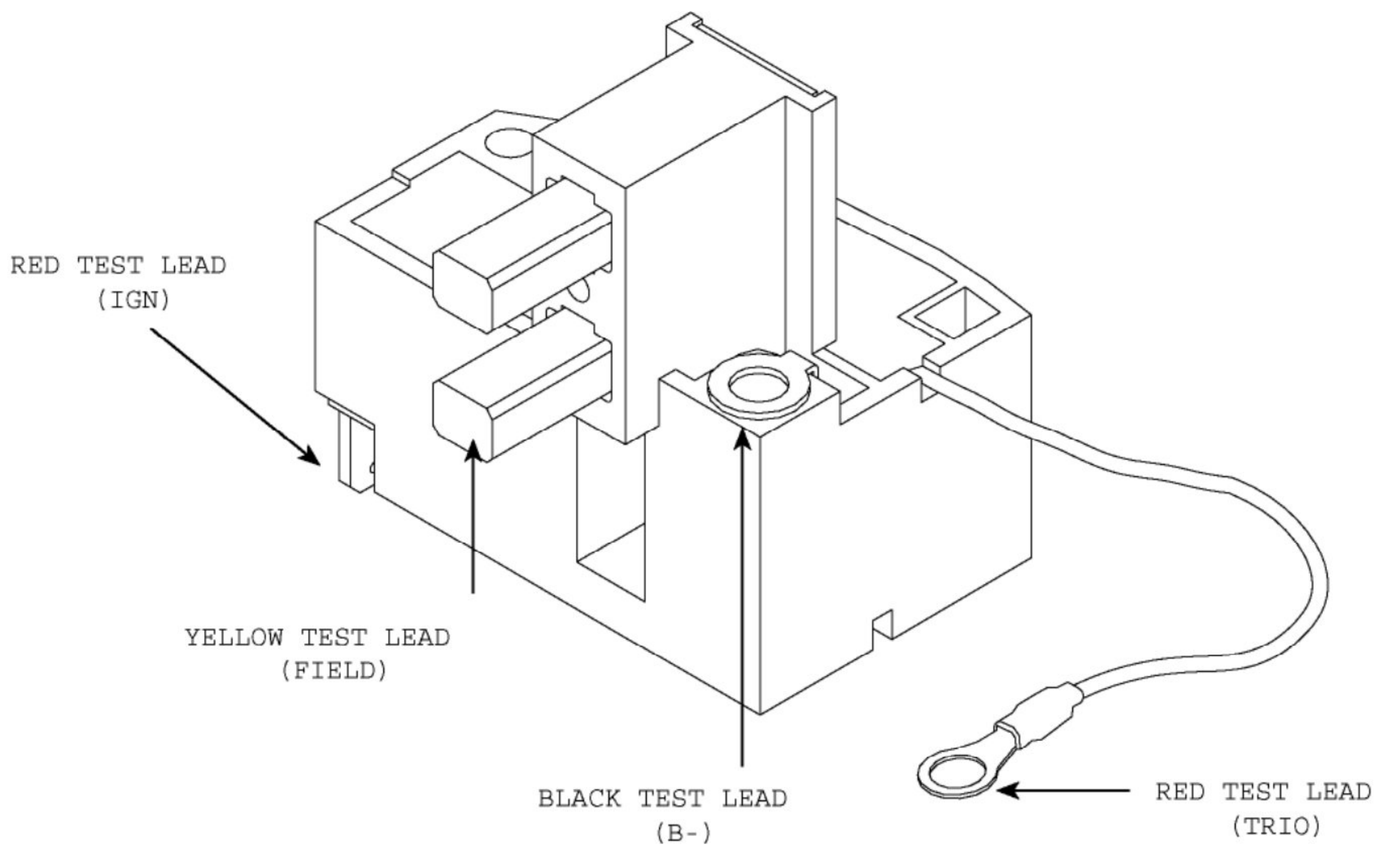

TRANSPO TESTER INSTRUCTIONS

for LEECE NEVILLE type regulators

PART NO.	FLD	VOLT	SET POINT	PART NO.	FLD	VOLT	SET POINT
L79000	**A**	**12**	**14.2**	**L79000S**	**A**	**12**	**14.2**
L79000HD	**A**	**12**	**14.2**	**L79000X**	**A**	**12**	**14.2**
L79000HDP	**A**	**12**	**14.2**	**L95019**	**A**	**12**	**14.2**
L79000LH	**A**	**12**	**14.2**	**L96852**	**A**	**24**	**27.5**

1. POWER OFF: Set "Voltage Range" and "FLD" switches to desired setting. Connect the voltage regulator as indicated in the diagram below.

2. POWER ON: Field lamp should blink and meter will indicate approximately the set point voltage indicated in the above table.

3. ADDITIONAL TEST: Remove red test lead from regulator wire marked "TRIO". Filed lamp should turn off and the meter will indicate low voltage.

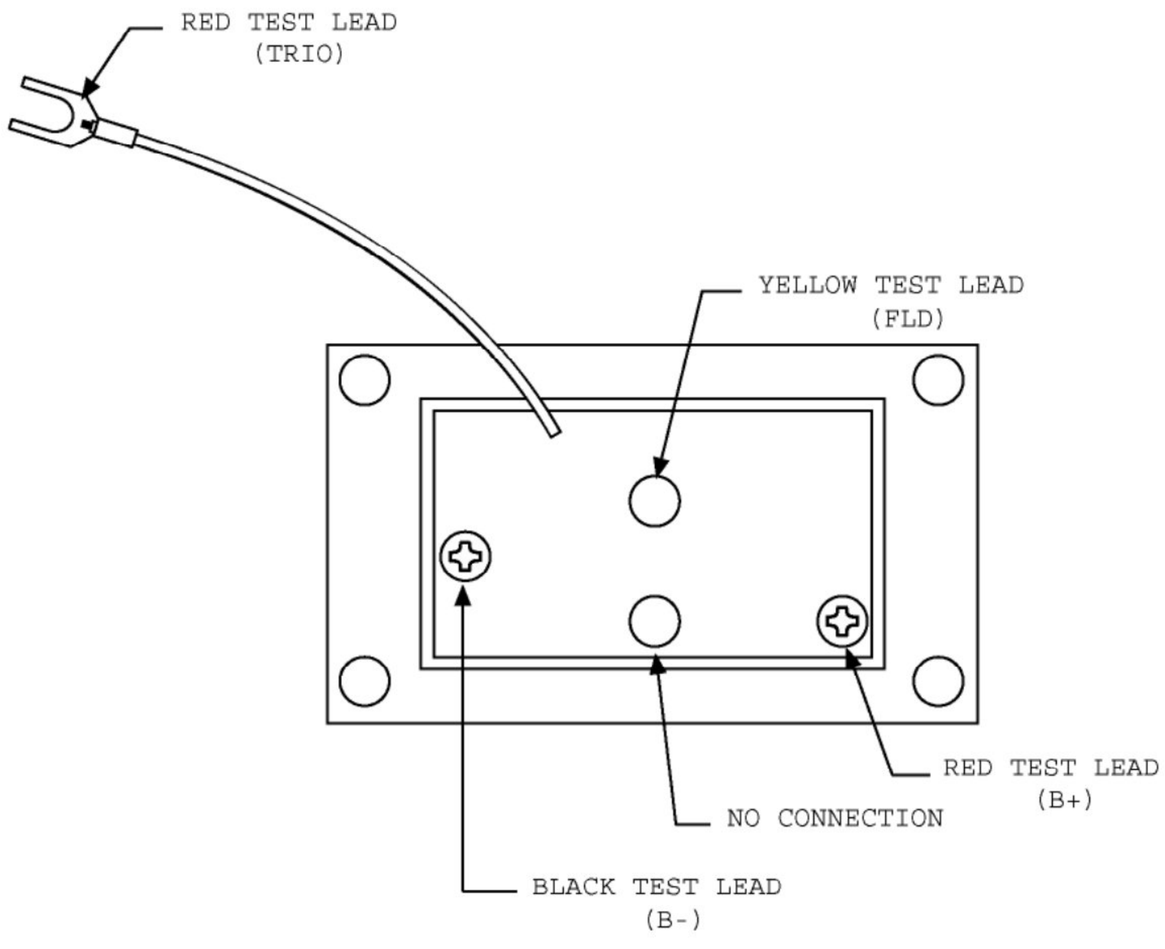

TRANSPO TESTER INSTRUCTIONS

for LEECE NEVILLE type regulators

PART NO.	FLD	VOLT	SET POINT	PART NO.	FLD	VOLT	SET POINT
L79350S	**A**	**24**	**27.5**				
L97050S	**A**	**32**	**37.5**				

1. POWER OFF: Set "Voltage Range" and "FLD" switches to desired setting. Connect the voltage regulator as indicated in the diagram below.

2. POWER ON: Field lamp should blink and meter will indicate approximately the set point voltage indicated in the above table.

3. ADDITIONAL TEST: Remove red test lead from regulator wire marked "TRIO". Filed lamp should turn off and the meter will indicate low voltage.

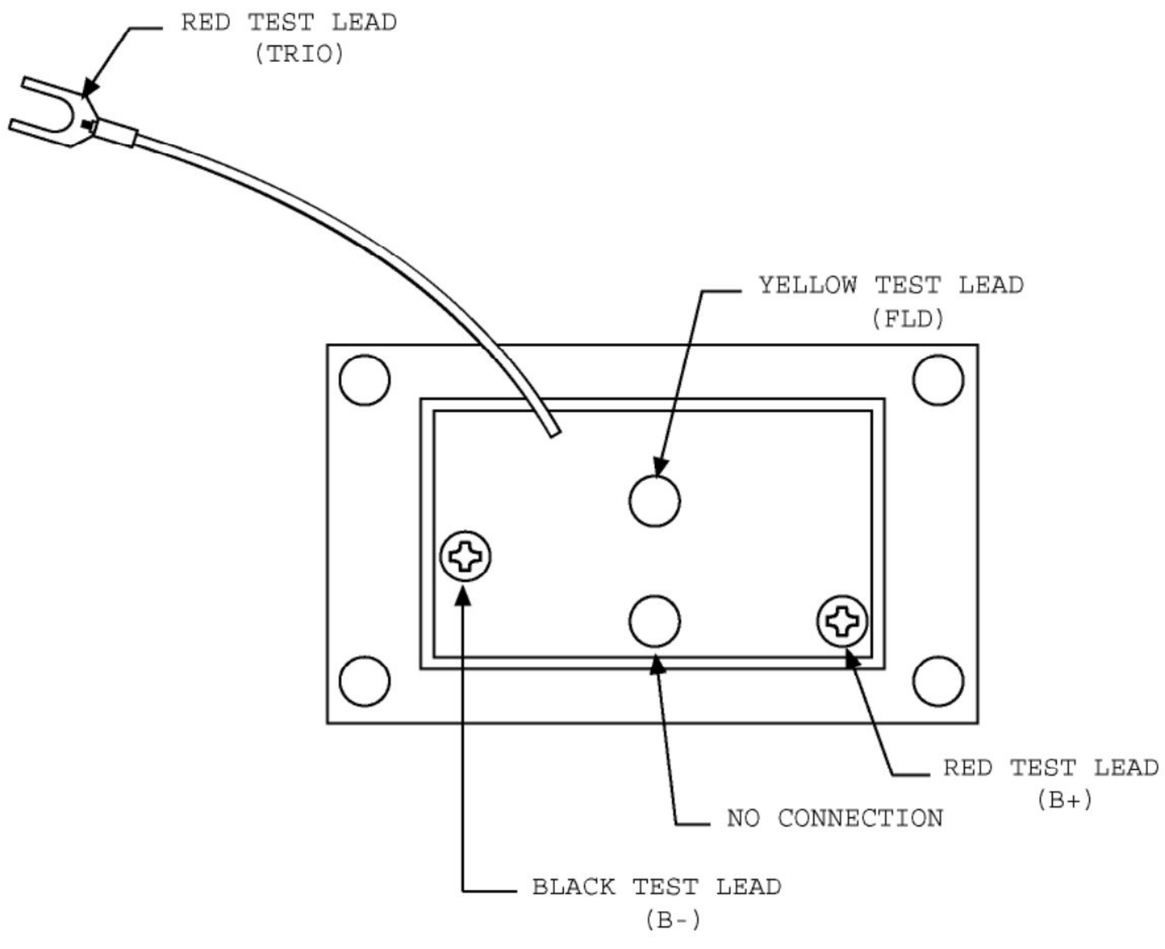

TRANSPO TESTER INSTRUCTIONS

for LEECE NEVILLE type regulators

PART NO.	FLD	VOLT	SET POINT	PART NO.	FLD	VOLT	SET POINT
L79000AC	**A**	**12**	**14.2**				
L96345AC	**A**	**12**	**14.2**				

1. POWER OFF: Set "Voltage Range" and "FLD" switches to desired setting. Connect the voltage regulator as indicated in the diagram below.

2. POWER ON: Field lamp should blink and meter will indicate approximately the set point voltage indicated in the above table.

3. ADDITIONAL TEST: Remove white test lead from regulator wire marked "Stator". Filed lamp should turn off and the meter will indicate low voltage.

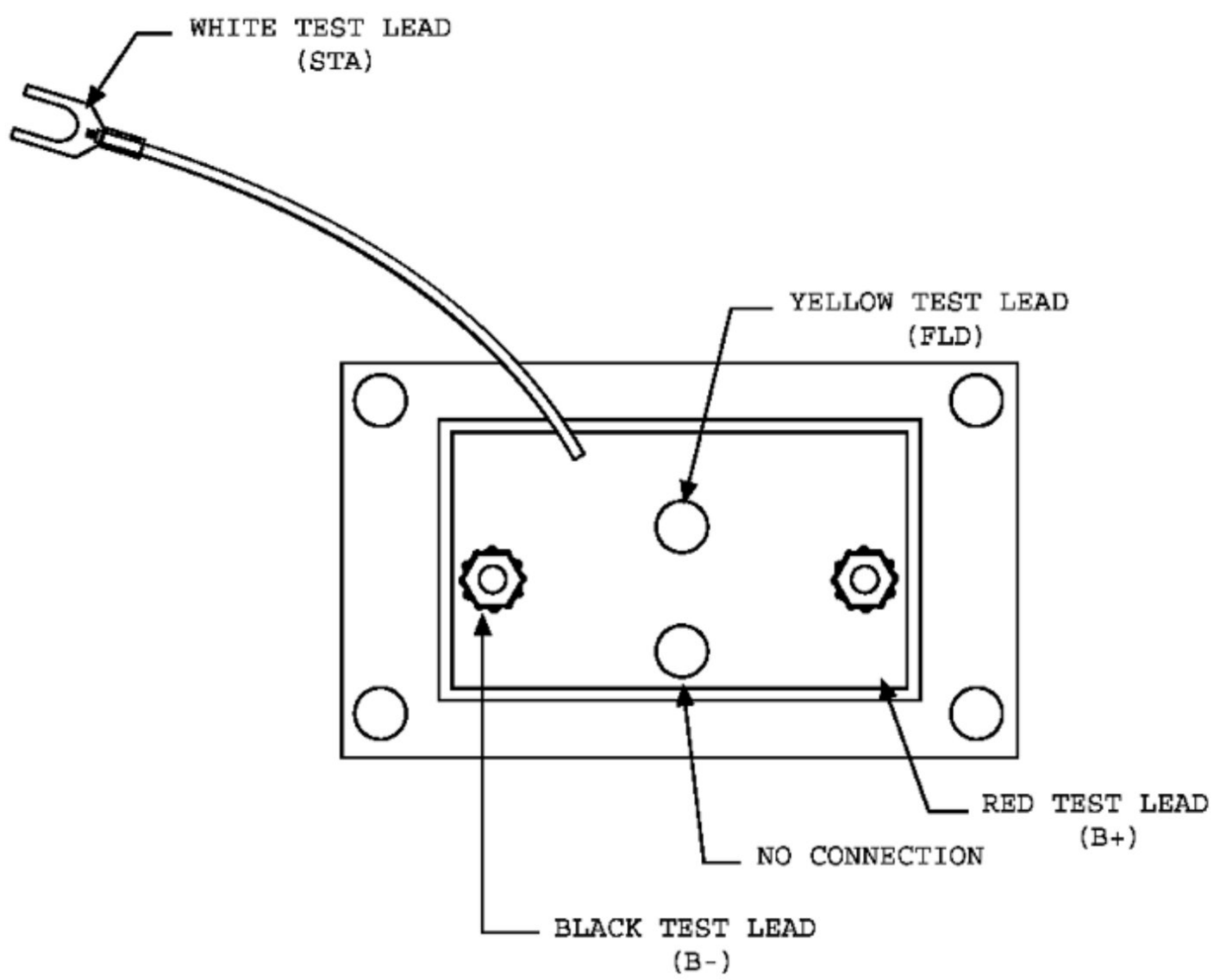

TRANSPO TESTER INSTRUCTIONS

for LEECE NEVILLE type regulators

PART NO.	FLD	VOLT	SET POINT	PART NO.	FLD	VOLT	SET POINT
L95300S	**A**	**24**	**28.0**				
L99500S	**A**	**12**	**14.2**				
L99825S	**A**	**24**	**28.0**				
L99850S	**A**	**32**	**37.5**				

1. POWER OFF: Set "Voltage Range" and "FLD" switches to desired setting. Connect the voltage regulator as indicated in the diagram below.

2. POWER ON: Field lamp should blink and meter will indicate approximately the set point voltage indicated in the above table.

3. ADDITIONAL TEST:

NOTE: Connect B+ to the three stator Terminals if no IGN terminal is used

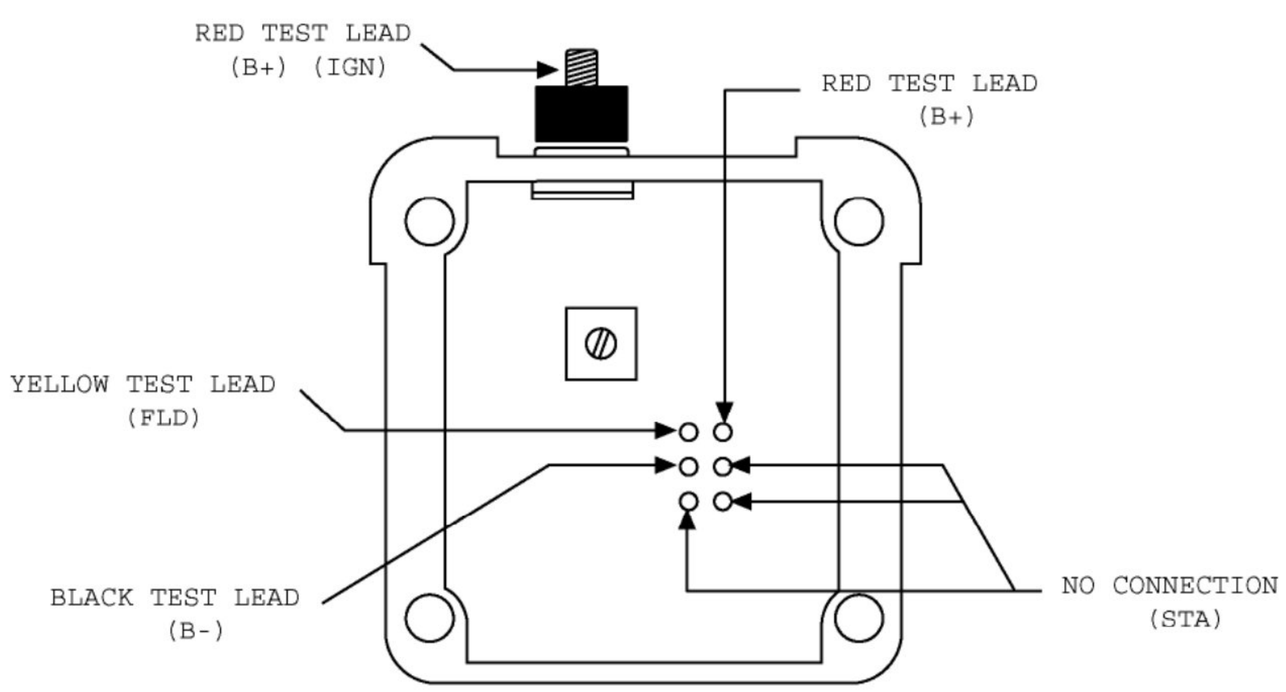

TRANSPO TESTER INSTRUCTIONS

for LEECE NEVILLE type regulators

PART NO.	FLD	VOLT	SET POINT	PART NO.	FLD	VOLT	SET POINT
L77973AC	**A**	**12**	**14.2**				
L97300AC	**A**	**12**	**14.2**				

1. POWER OFF: Set "Voltage Range" and "FLD" switches to desired setting. Connect the voltage regulator as indicated in the diagram below.

2. POWER ON: Field lamp should blink and meter will indicate approximately the set point voltage indicated in the above table.

3. ADDITIONAL TEST: Remove white test lead from the regulator's stud marked "Stator". Field lamp should turn off and the meter will indicate low voltage.

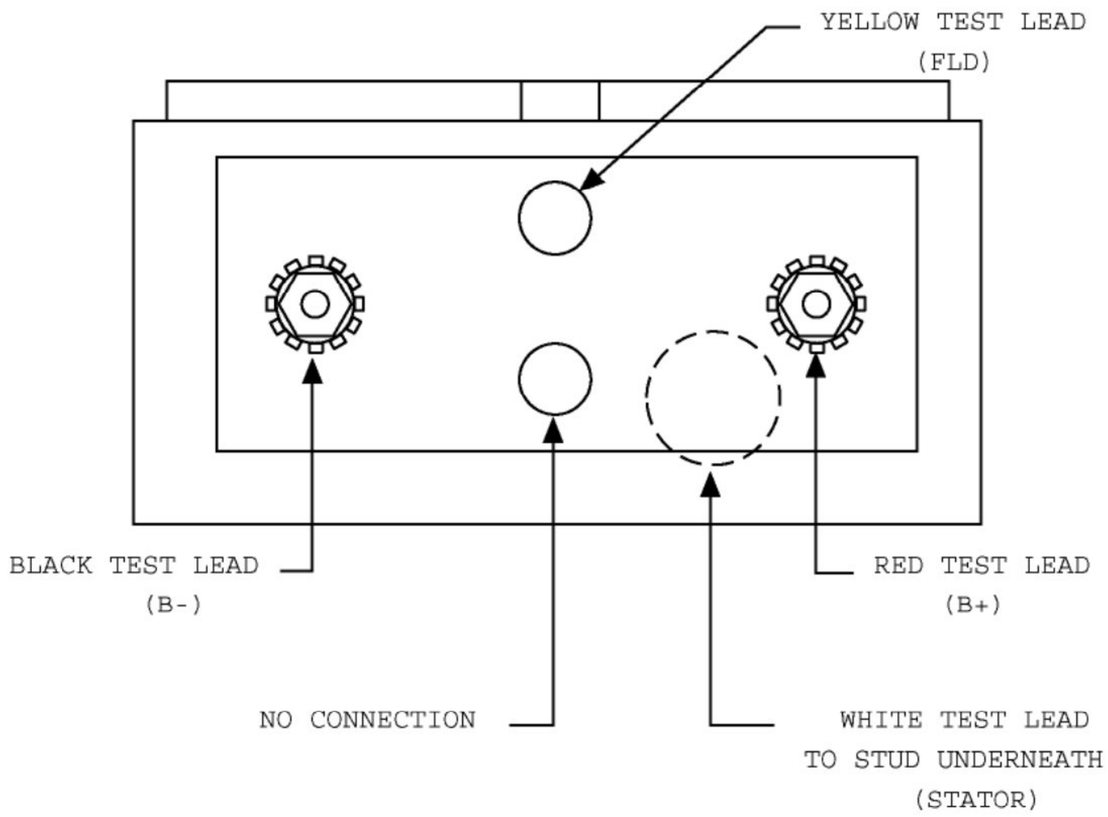

TRANSPO TESTER INSTRUCTIONS

for LEECE NEVILLE type regulators

PART NO.	FLD	VOLT	SET POINT	PART NO.	FLD	VOLT	SET POINT
L77973S	**A**	**12**	**14.2**				
L78855S	**A**	**24**	**27.5**				
L78935S	**A**	**32**	**37.5**				
L97300S	**A**	**12**	**14.2**				

1. POWER OFF: Set "Voltage Range" and "FLD" switches to desired setting. Connect the voltage regulator as indicated in the diagram below.

2. POWER ON: Field lamp should blink and meter will indicate approximately the set point voltage indicated in the above table.

3. ADDITIONAL TEST: Remove red test lead from regulator's stud marked "TRIO" or "IGN". Field lamp should turn off and the meter will indicate low voltage.

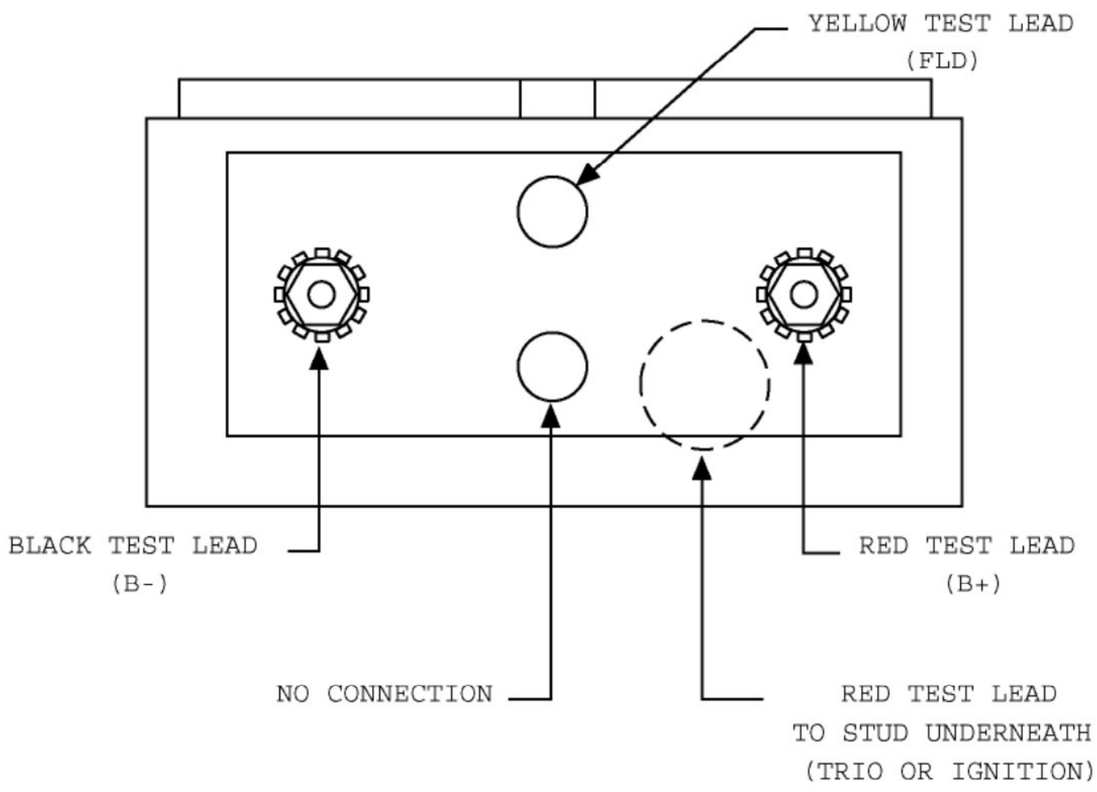

TRANSPO TESTER INSTRUCTIONS

for LEECE NEVILLE type regulators

PART NO.	FLD	VOLT	SET POINT	PART NO.	FLD	VOLT	SET POINT
L5022	**A**	**12**	**14.2**	**L5042HD**	**A**	**24**	**27.5**
L5042	**A**	**24**	**27.5**				
L5062	**A**	**32**	**37.5**				
L5078	**A**	**12**	**14.2**				

1. POWER OFF: Set "Voltage Range" and "FLD" switches to desired setting. Connect the voltage regulator as indicated in the diagram below.

2. POWER ON: Field lamp should blink and meter will indicate approximately the set point voltage indicated in the above table.

3. ADDITIONAL TEST:

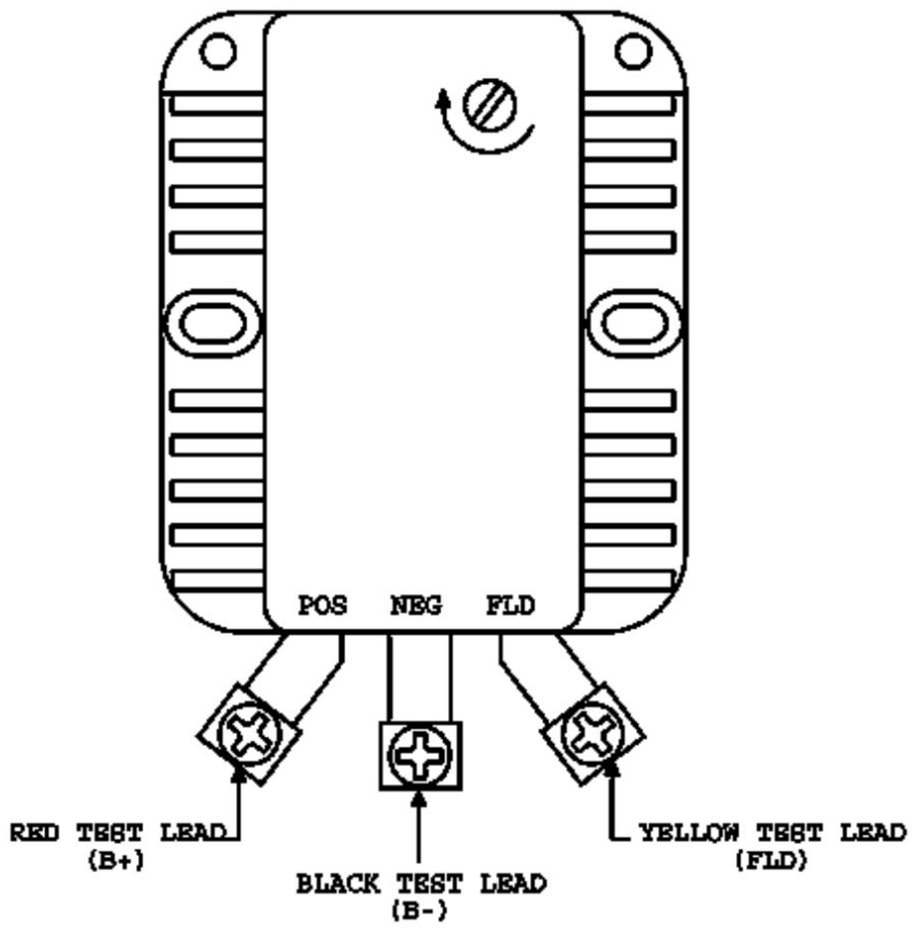

TRANSPO TESTER INSTRUCTIONS

for LEECE NEVILLE type regulators

PART NO.	FLD	VOLT	SET POINT	PART NO.	FLD	VOLT	SET POINT
L5016	**B**	**12**	**14.2**				
L5028	**B**	**12**	**14.2**				

1. POWER OFF: Set "Voltage Range" and "FLD" switches to desired setting. Connect the voltage regulator as indicated in the diagram below.

2. POWER ON: Field lamp should blink and meter will indicate approximately the set point voltage indicated in the above table.

3. ADDITIONAL TEST:

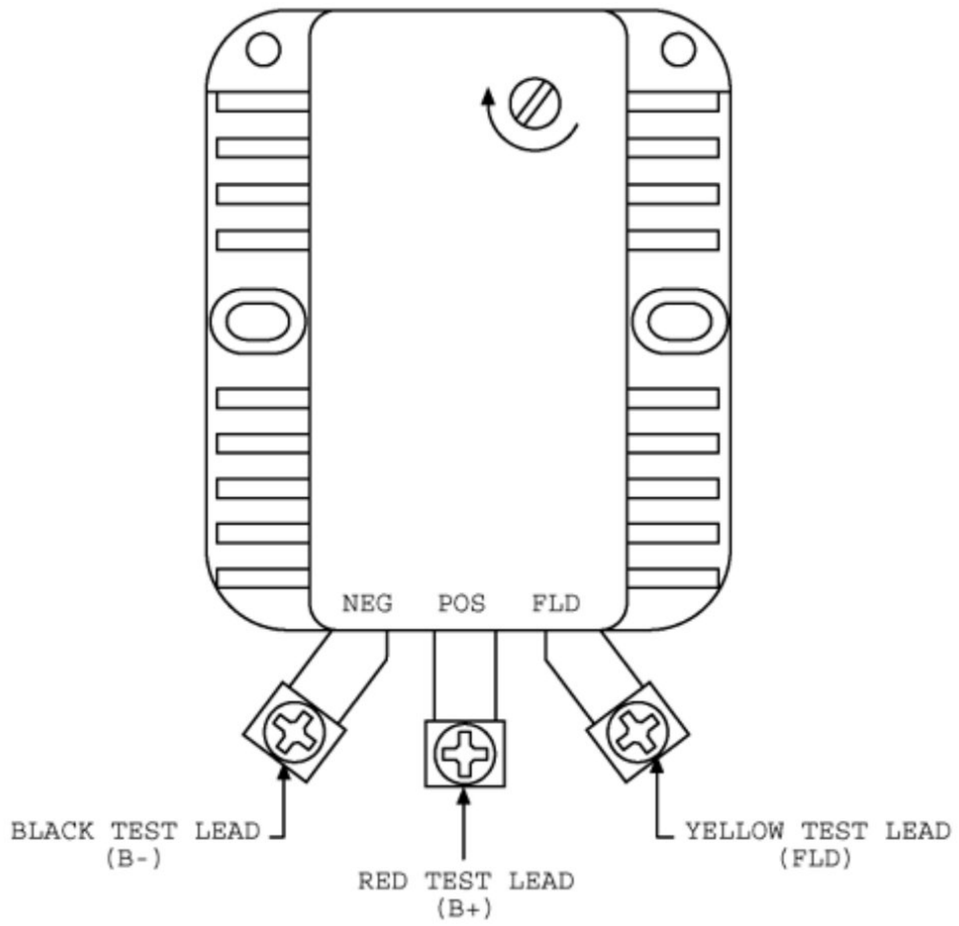

TRANSPO TESTER INSTRUCTIONS

for LEECE NEVILLE type regulators

PART NO.	FLD	VOLT	SET POINT	PART NO.	FLD	VOLT	SET POINT
L1666280	**A**	**12**	**13.8**				

1. POWER OFF: Set "Voltage Range" and "FLD" switches to desired setting. Connect the voltage regulator as indicated in the diagram below.

2. POWER ON: Field lamp should blink and meter will indicate approximately the set point voltage indicated in the above table.

3. ADDITIONAL TEST:

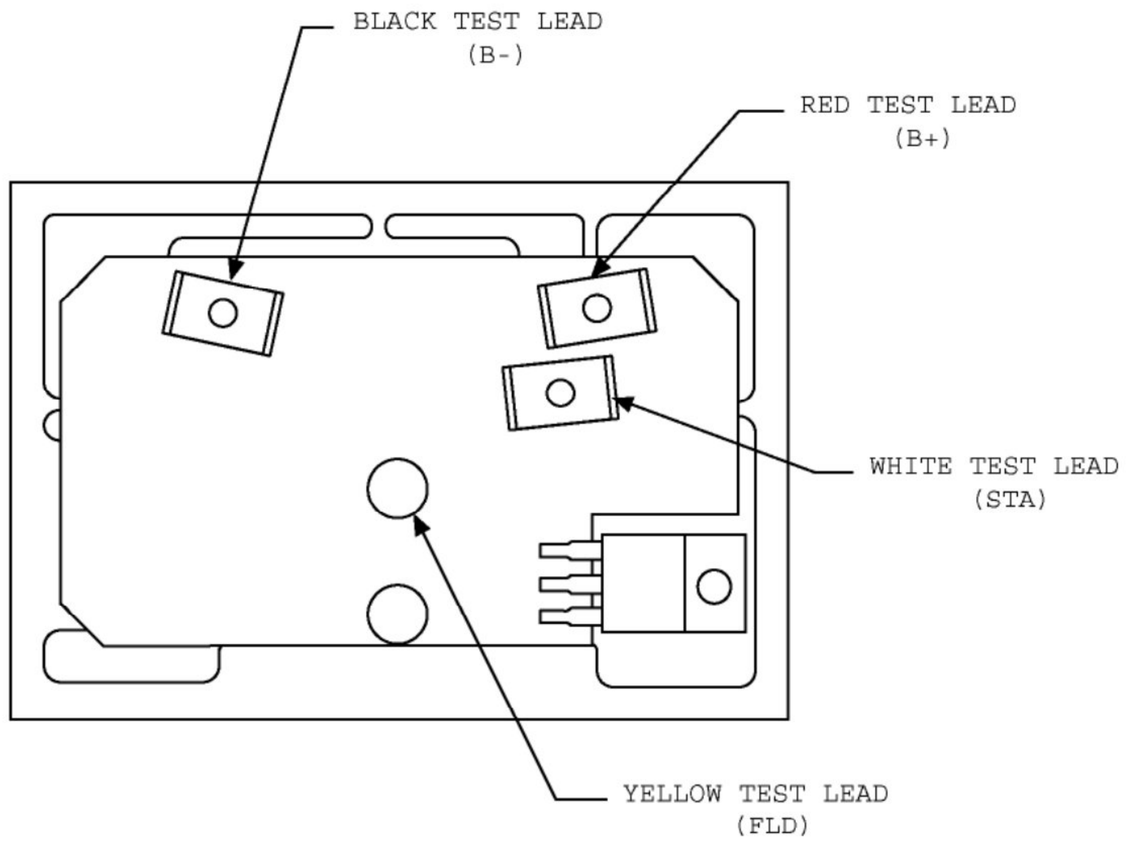

TRANSPO TESTER INSTRUCTIONS

for LEECE NEVILLE type regulators

PART NO.	FLD	VOLT	SET POINT	PART NO.	FLD	VOLT	SET POINT
L5003	**B**	**12**	**14.2**				

1. POWER OFF: Set "Voltage Range" and "FLD" switches to desired setting. Connect the voltage regulator as indicated in the diagram below.

2. POWER ON: Field lamp should blink and meter will indicate approximately the set point voltage indicated in the above table.

3. ADDITIONAL TEST:

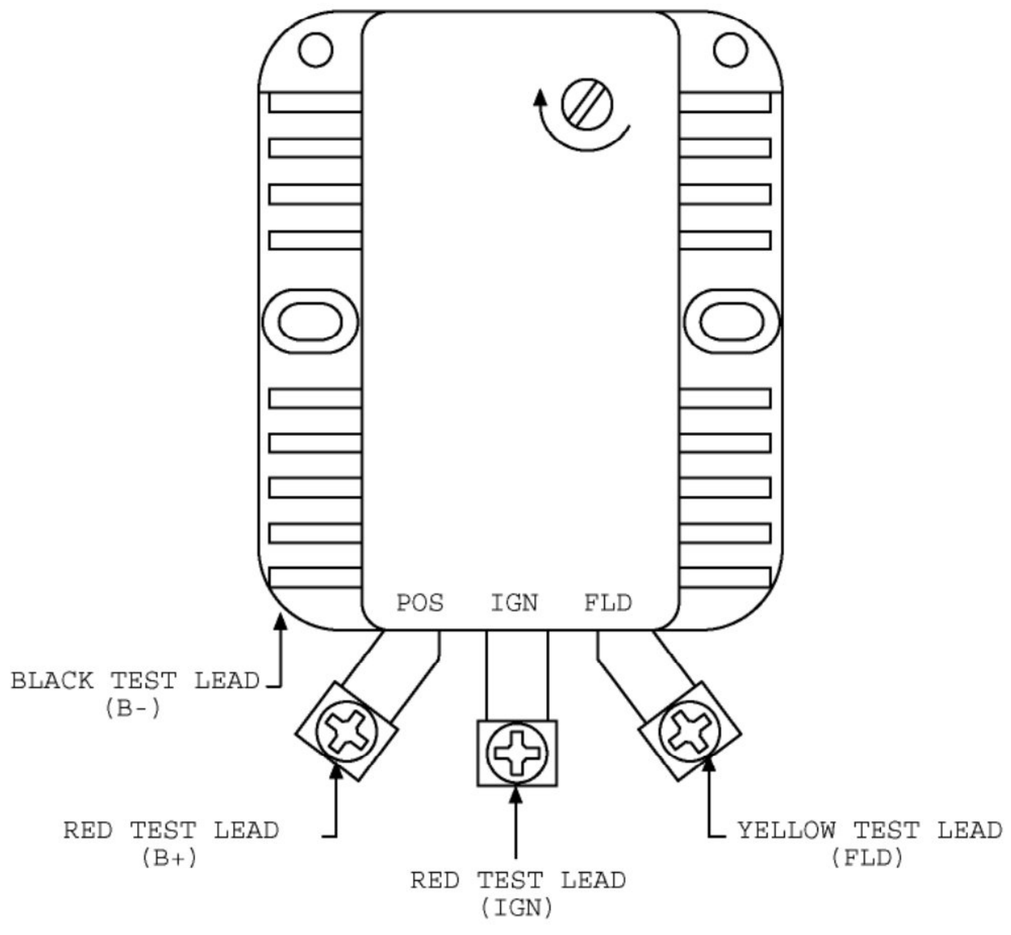

TRANSPO TESTER INSTRUCTIONS

for LEECE NEVILLE type regulators

PART NO.	FLD	VOLT	SET POINT	PART NO.	FLD	VOLT	SET POINT
L99920	**A**	**12**	**14.2**				

1. POWER OFF: Set "Voltage Range" and "FLD" switches to desired setting. Connect the voltage regulator as indicated in the diagram below.

2. POWER ON: Field lamp should blink and meter will indicate approximately the set point voltage indicated in the above table.

3. ADDITIONAL TEST: Remove white test lead from “Stator” terminal and regulator turns off.

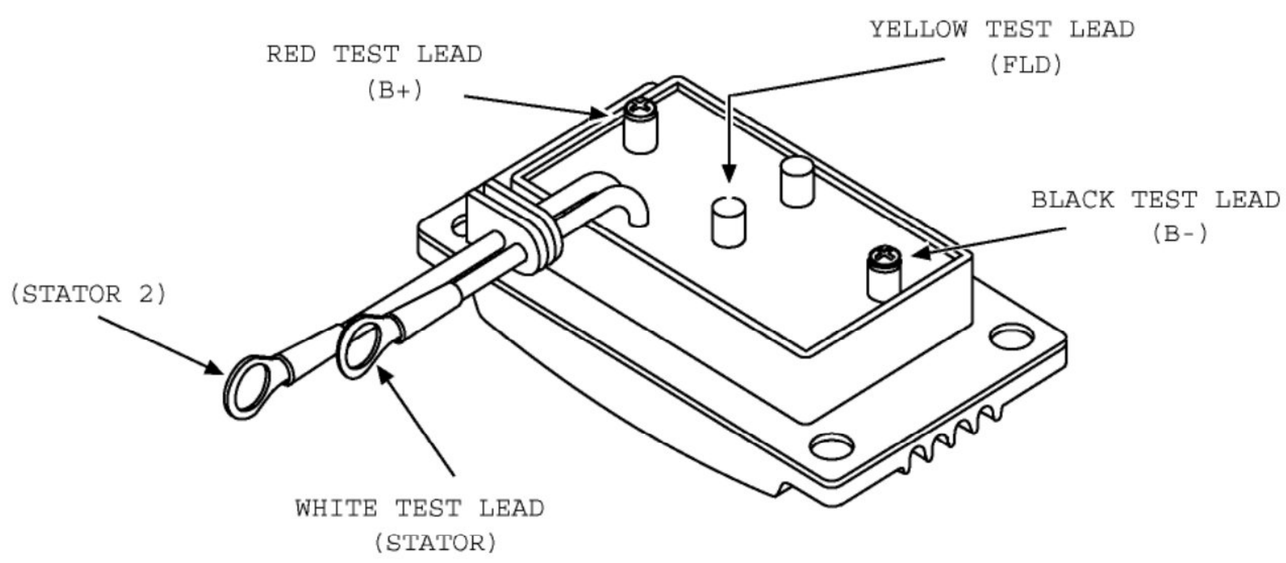

TRANSPO TESTER INSTRUCTIONS

for LUCAS type regulators

PART NO.	FLD	VOLT	SET POINT	PART NO.	FLD	VOLT	SET POINT
IL211	**A**	**12**	**14.2**				
IL213	**A**	**12**	**14.2**				
IL217	**A**	**12**	**14.2**				

1. POWER OFF: Set "Voltage Range" and "FLD" switches to desired setting. Connect the voltage regulator as indicated in the diagram below.

2. POWER ON: Field lamp should blink and meter will indicate approximately the set point voltage indicated in the above table.

3. ADDITIONAL TEST:

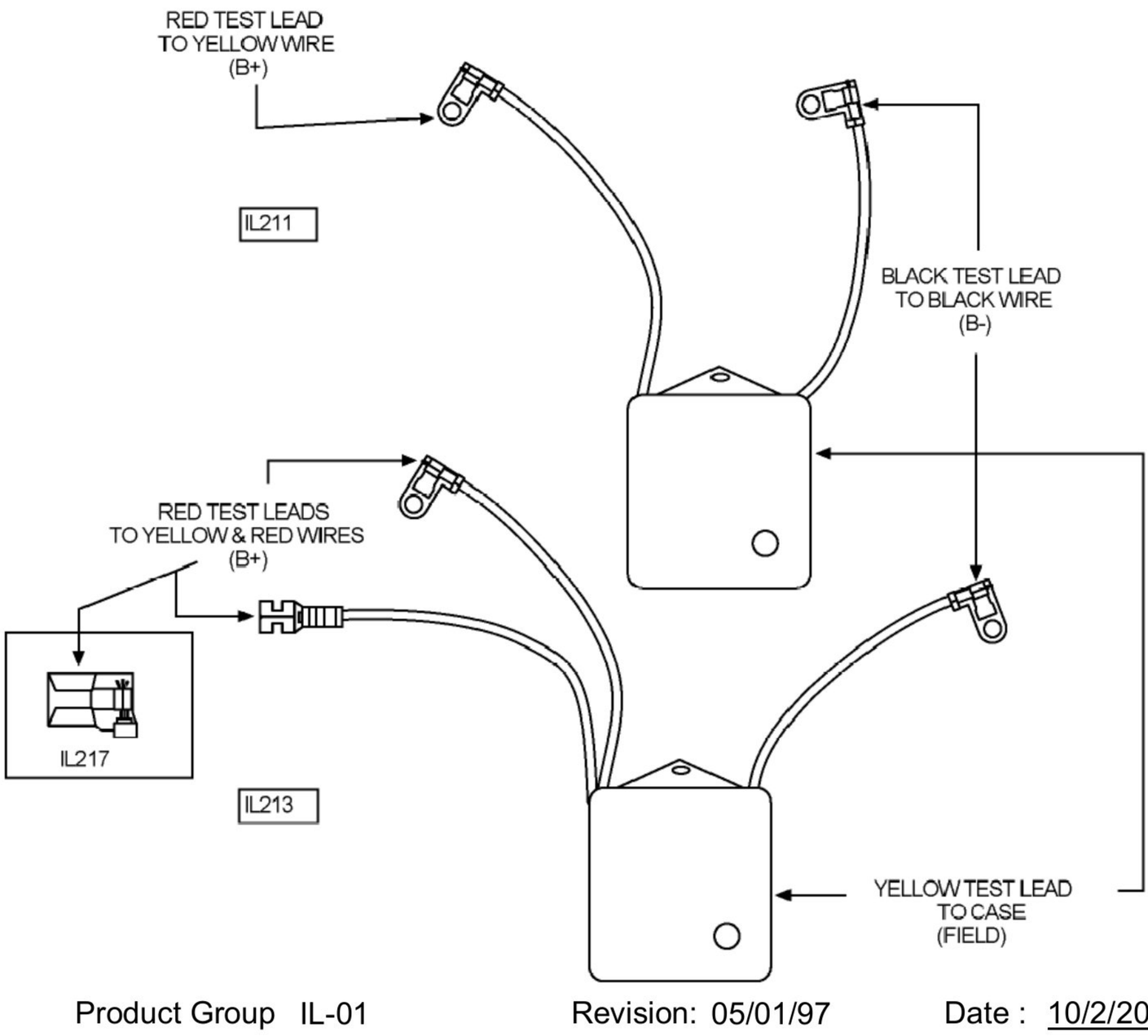

TRANSPO TESTER INSTRUCTIONS

for LUCAS type regulators

PART NO.	FLD	VOLT	SET POINT	PART NO.	FLD	VOLT	SET POINT
IL214	**A**	**12**	**14.2**				
IL215	**A**	**12**	**14.2**				
IL216	**A**	**12**	**14.2**				
IL218	**A**	**12**	**14.2**				

1. POWER OFF: Set "Voltage Range" and "FLD" switches to desired setting. Connect the voltage regulator as indicated in the diagram below.

2. POWER ON: Field lamp should blink and meter will indicate approximately the set point voltage indicated in the above table.

3. ADDITIONAL TEST:

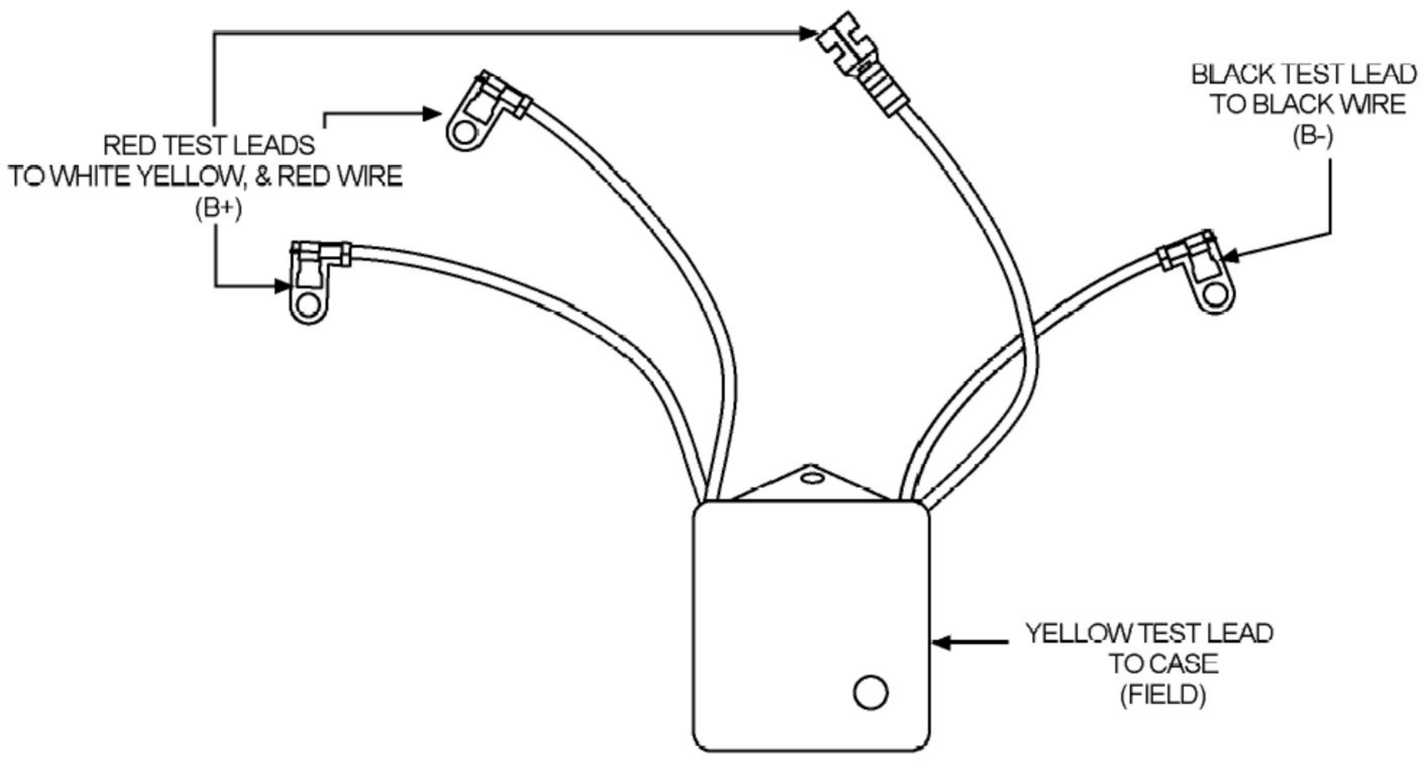

TRANSPO TESTER INSTRUCTIONS

for LUCAS type regulators

PART NO.	FLD	VOLT	SET POINT	PART NO.	FLD	VOLT	SET POINT
IL223	**A**	**12**	**14.3**				
IL225	**A**	**24**	**28.1**				

1. POWER OFF: Set "Voltage Range" and "FLD" switches to desired setting. Connect the voltage regulator as indicated in the diagram below.

2. POWER ON: Field lamp should blink and meter will indicate approximately the set point voltage indicated in the above table.

3. ADDITIONAL TEST:

TRANSPO TESTER INSTRUCTIONS

for LUCAS type regulators

PART NO.	FLD	VOLT	SET POINT	PART NO.	FLD	VOLT	SET POINT
IL224	**A**	**12**	**12.5**				

1. POWER OFF: Set "Voltage Range" and "FLD" switches to desired setting. Connect the voltage regulator as indicated in the diagram below.

2. POWER ON: Field lamp should blink and meter will indicate approximately the set point voltage indicated in the above table.

3. ADDITIONAL TEST:

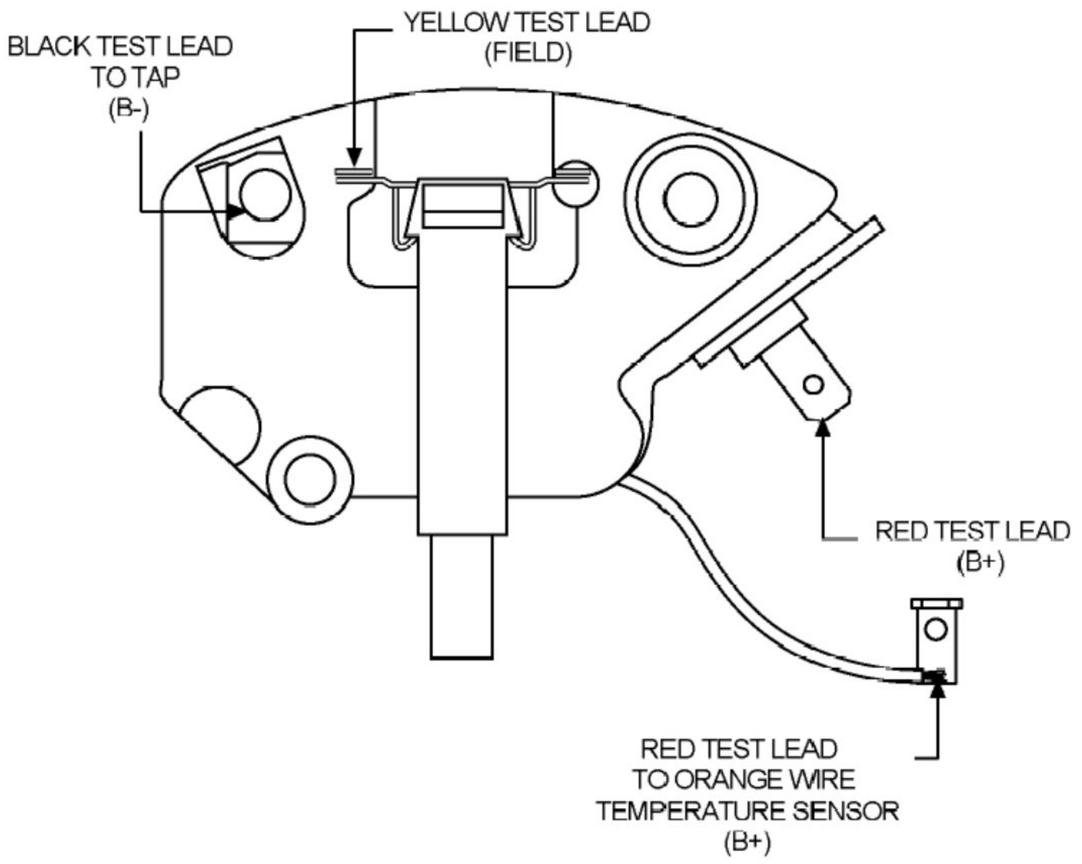

TRANSPO TESTER INSTRUCTIONS

for LUCAS type regulators

PART NO.	FLD	VOLT	SET POINT	PART NO.	FLD	VOLT	SET POINT
IL219	**A**	**12**	**14.3**				
IL220	**A**	**12**	**14.3**				
IL221	**A**	**12**	**12.3**				
IL222	**A**	**12**	**14.3**				

1. POWER OFF: Set "Voltage Range" and "FLD" switches to desired setting. Connect the voltage regulator as indicated in the diagram below.

2. POWER ON: Field lamp should blink and meter will indicate approximately the set point voltage indicated in the above table.

3. ADDITIONAL TEST:

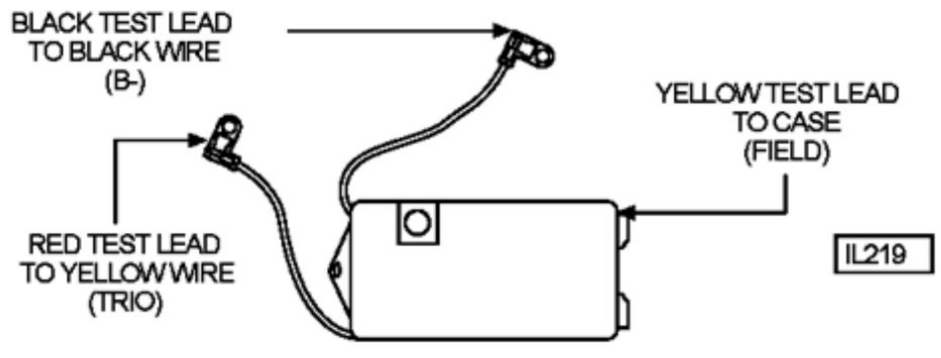

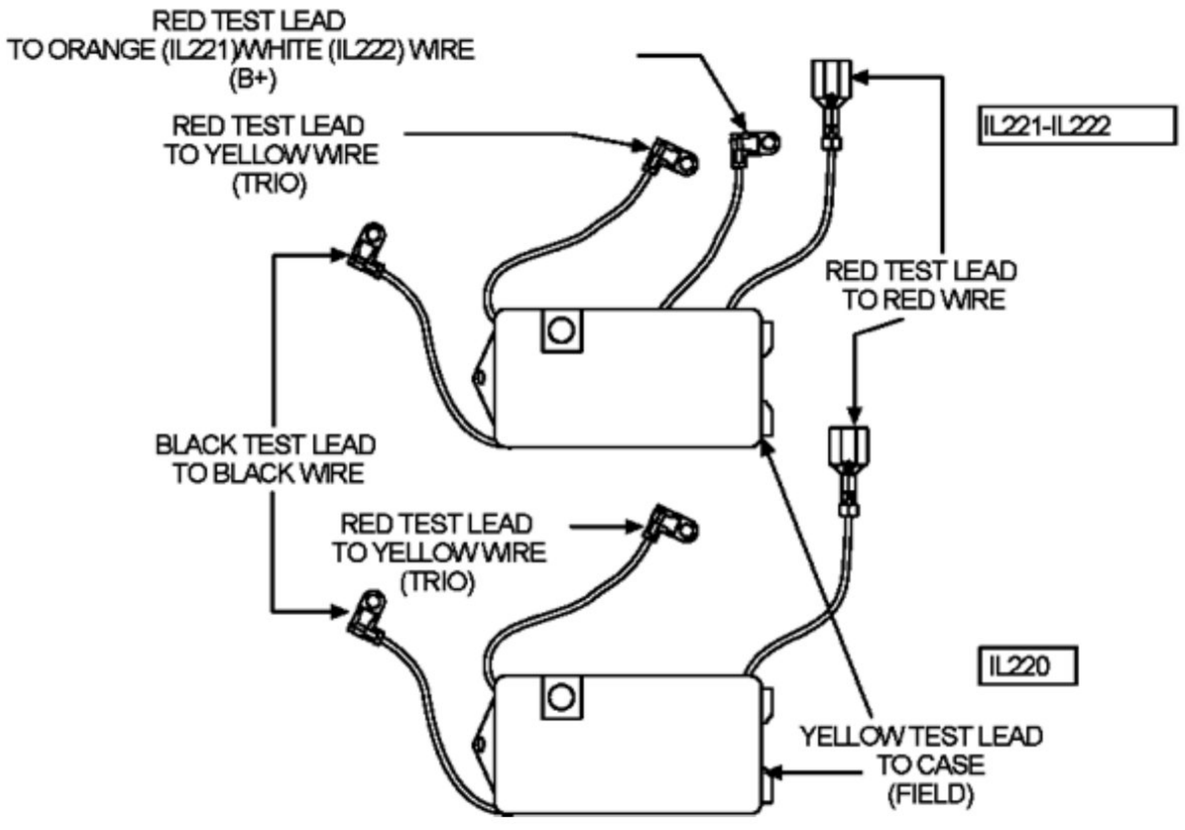

TRANSPO TESTER INSTRUCTIONS

for LUCAS type regulators

PART NO.	FLD	VOLT	SET POINT	PART NO.	FLD	VOLT	SET POINT
IL1292	**B**	**12**	**14.3**				

1. POWER OFF: Set "Voltage Range" and "FLD" switches to desired setting. Connect the voltage regulator as indicated in the diagram below.

2. POWER ON: Field lamp should blink and meter will indicate approximately the set point voltage indicated in the above table.

3. ADDITIONAL TEST:

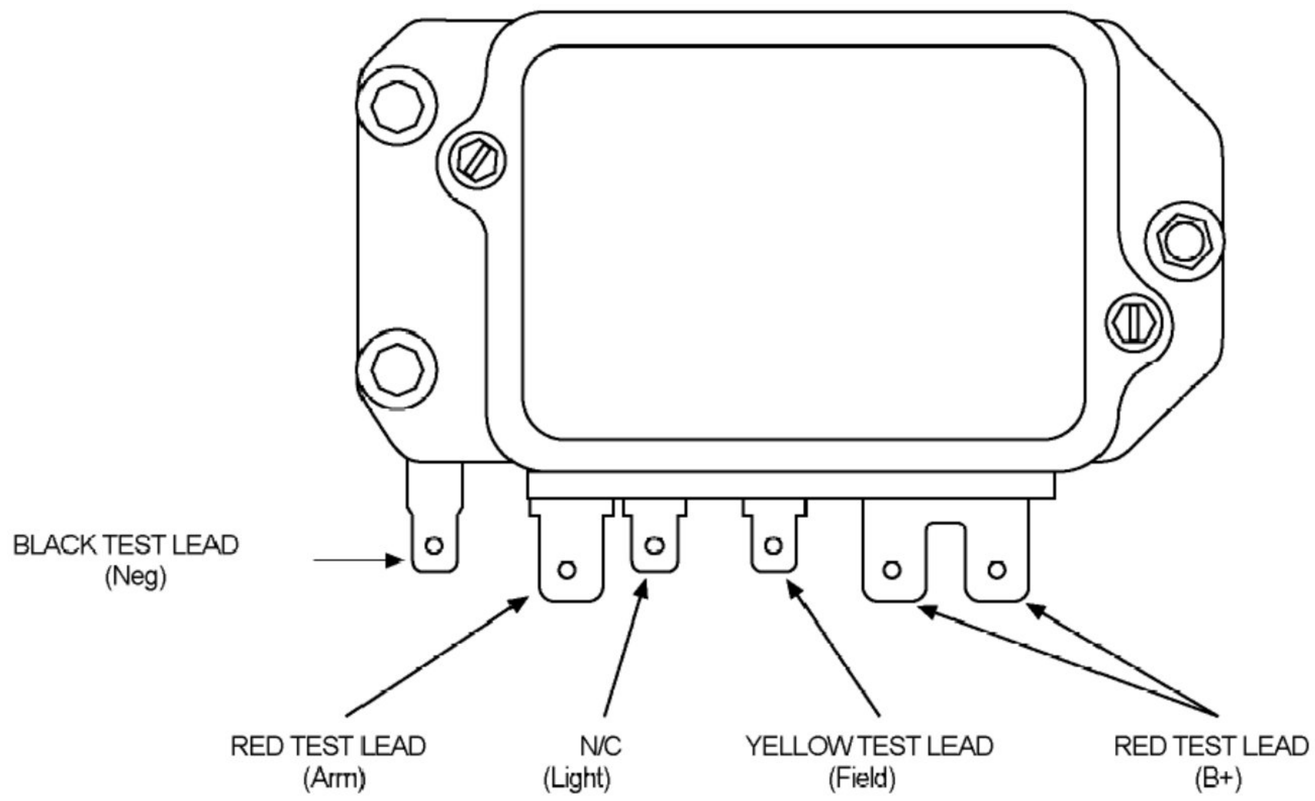

TRANSPO TESTER INSTRUCTIONS

for MAGNETI-MARELLI type regulators

PART NO.	FLD	VOLT	SET POINT	PART NO.	FLD	VOLT	SET POINT
IX106	**A**	**12**	**14.2**				
IX107	**A**	**12**	**14.2**				
IX108	**A**	**24**	**28.0**				
IX109	**A**	**24**	**28.0**				

1. POWER OFF: Set "Voltage Range" and "FLD" switches to desired setting. Connect the voltage regulator as indicated in the diagram below.

2. POWER ON: Field lamp should blink and meter will indicate approximately the set point voltage indicated in the above table.

3. ADDITIONAL TEST:

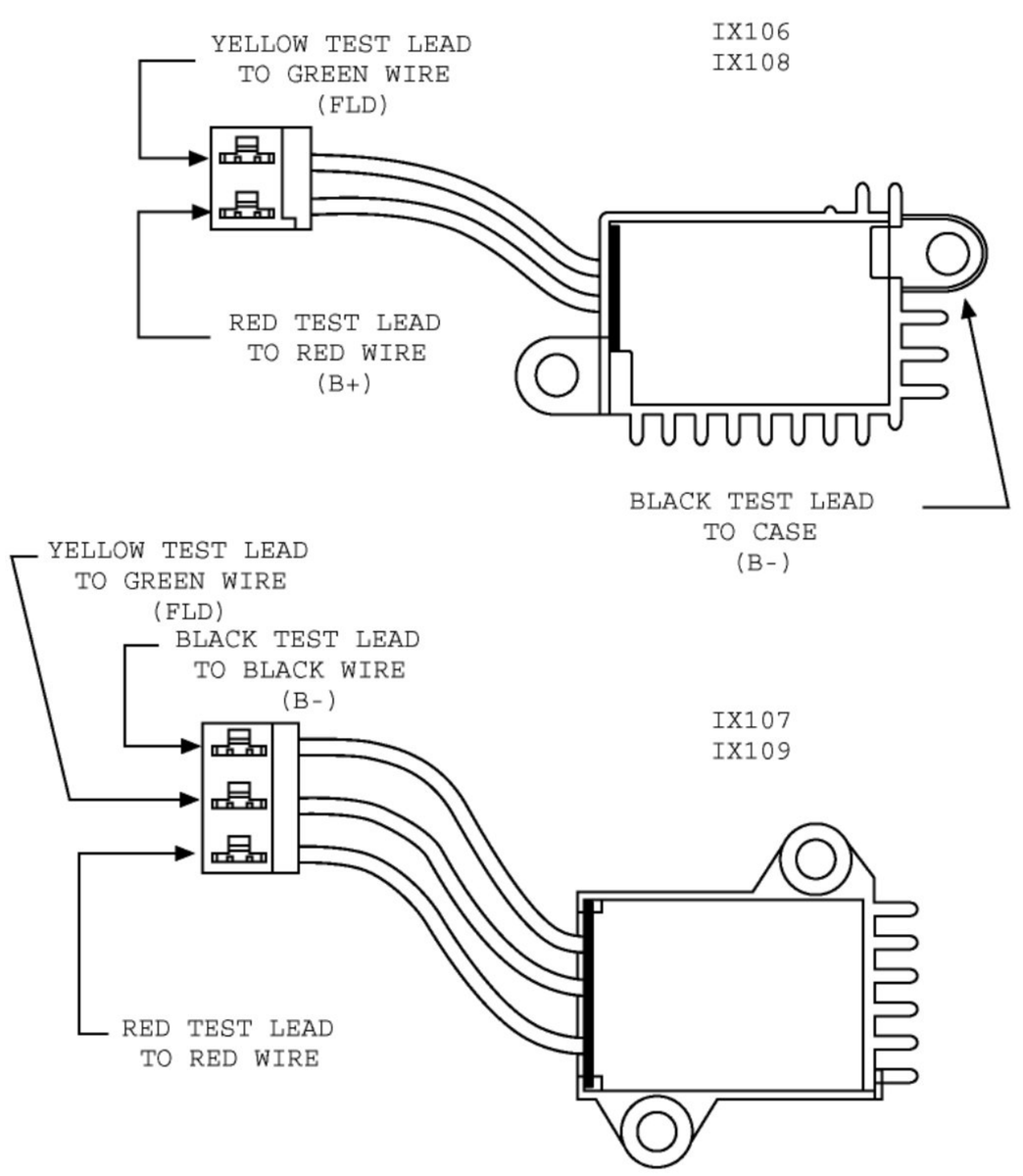

TRANSPO TESTER INSTRUCTIONS

for MAGNETI-MARELLI type regulators

PART NO.	FLD	VOLT	SET POINT	PART NO.	FLD	VOLT	SET POINT
IX110	**A**	**12**	**14.5**				
IX111	**A**	**24**	**28.5**				

1. POWER OFF: Set "Voltage Range" and "FLD" switches to desired setting. Connect the voltage regulator as indicated in the diagram below.

2. POWER ON: Field lamp should blink and meter will indicate approximately the set point voltage indicated in the above table.

3. ADDITIONAL TEST:

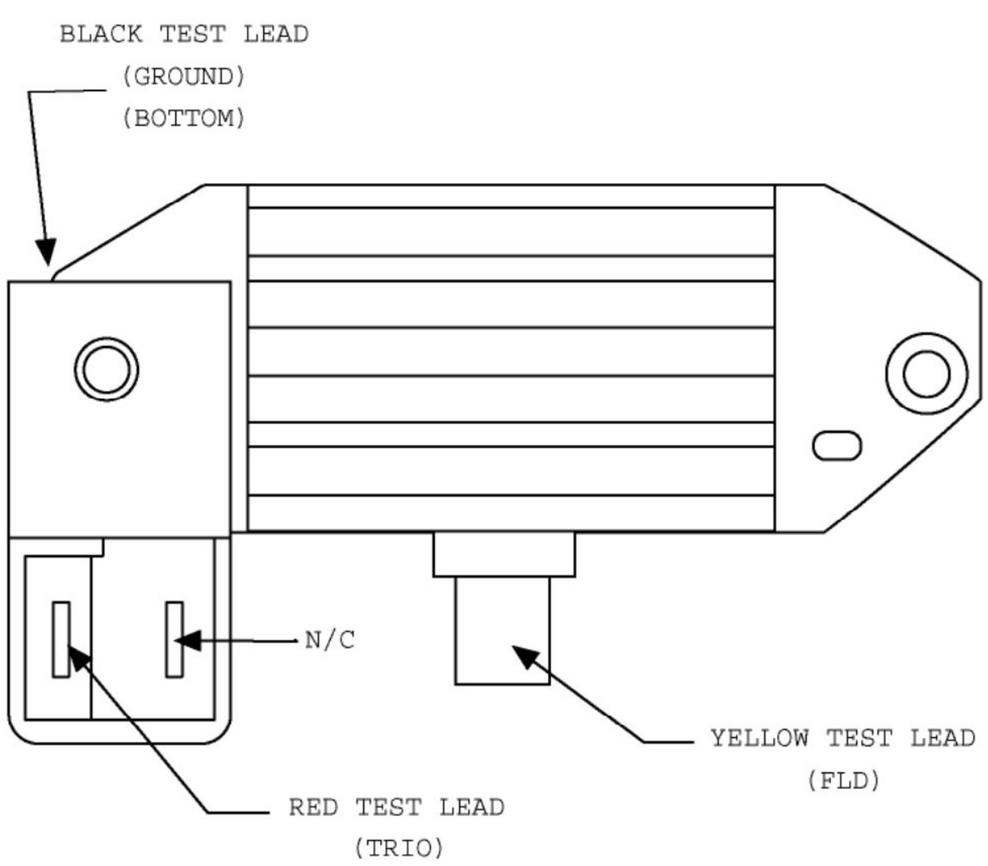

TRANSPO TESTER INSTRUCTIONS

for MAGNETI-MARELLI type regulators

PART NO.	FLD	VOLT	SET POINT	PART NO.	FLD	VOLT	SET POINT
IX4004	**B**	**12**	**14.3**				

1. POWER OFF: Set "Voltage Range" and "FLD" switches to desired setting. Connect the voltage regulator as indicated in the diagram below.

2. POWER ON: Field lamp should blink and meter will indicate approximately the set point voltage indicated in the above table.

3. ADDITIONAL TEST:

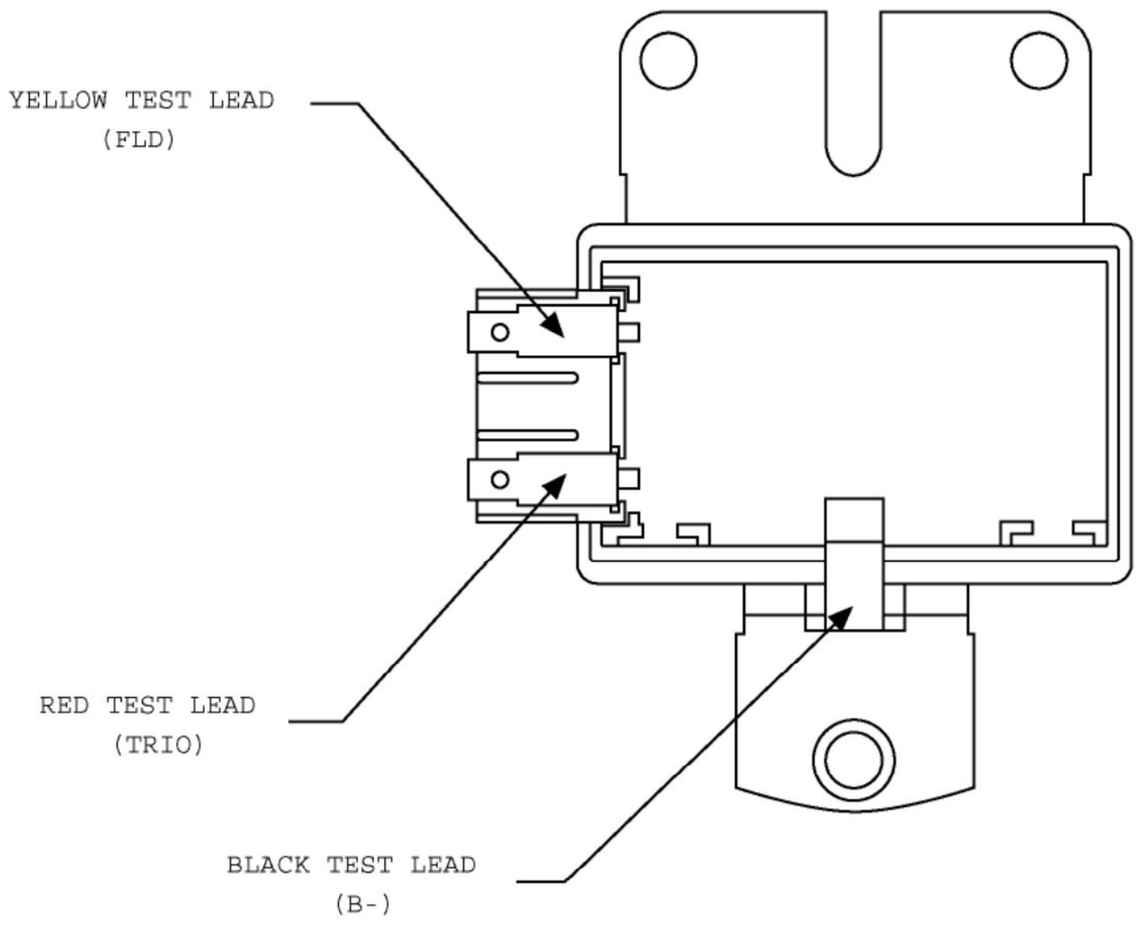

TRANSPO TESTER INSTRUCTIONS

for MAGNETI-MARELLI type regulators

PART NO.	FLD	VOLT	SET POINT	PART NO.	FLD	VOLT	SET POINT
IX121	**A**	**12**	**14.5**				

1. POWER OFF: Set "Voltage Range" and "FLD" switches to desired setting. Connect the voltage regulator as indicated in the diagram below.

2. POWER ON: Field lamp should blink and meter will indicate approximately the set point voltage indicated in the above table.

3. ADDITIONAL TEST: Remove white test lead from stator terminal. Indicator light will come on. Field light will stay on and meter will read approximately 12 volts.

Using VRC1000: To check for over Voltage, push the "Over Voltage" switch and the "Lamp Indicator" will turn on between 16.0V and 17.1V.

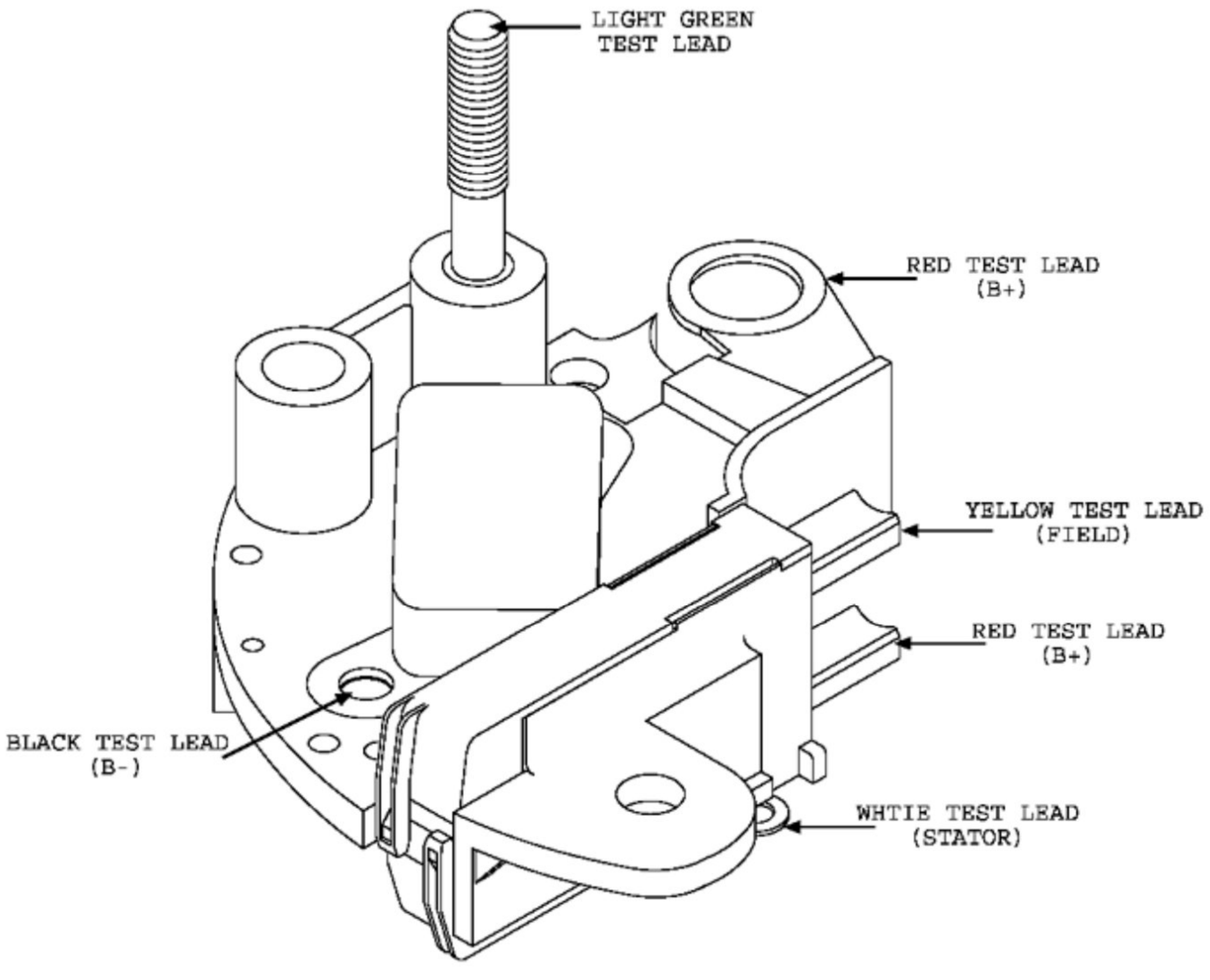

TRANSPO TESTER INSTRUCTIONS

for MAGNETI-MARELLI type regulators

PART NO.	FLD	VOLT	SET POINT	PART NO.	FLD	VOLT	SET POINT
IX127	**A**	**12**	**14.2**				
IX128	**A**	**12**	**14.2**				

1. POWER OFF: Set "Voltage Range" and "FLD" switches to desired setting. Connect the voltage regulator as indicated in the diagram below.

2. POWER ON: Field lamp should blink and meter will indicate approximately the set point voltage indicated in the above table.

3. ADDITIONAL TEST: Remove white test lead from stator terminal . Indicator light will come on. Field light will stay on and meter will read approximately 12 volts.

Using VRC1000: To check for over Voltage, push the "Over Voltage" switch and the "Lamp Indicator" will turn on between 16.0V and 17.1V.

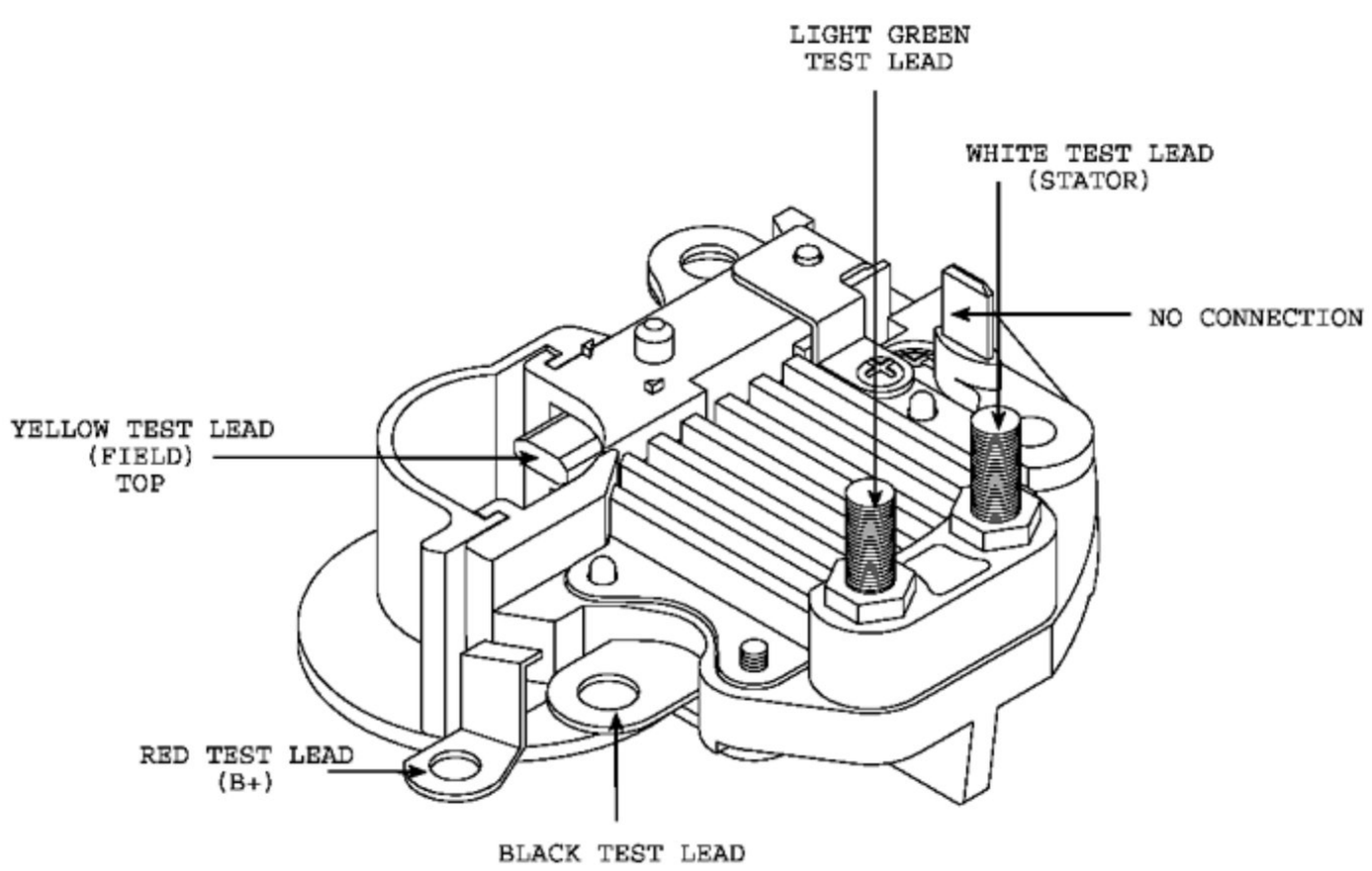

TRANSPO TESTER INSTRUCTIONS

for MAGNETI-MARELLI type regulators

PART NO.	FLD	VOLT	SET POINT	PART NO.	FLD	VOLT	SET POINT
IX123	**A**	**12**	**14.1**				

1. POWER OFF: Set "Voltage Range" and "FLD" switches to desired setting. Connect the voltage regulator as indicated in the diagram below.

2. POWER ON: Field lamp should blink and meter will indicate approximately the set point voltage indicated in the above table.

3. ADDITIONAL TEST: Remove white test lead from stator terminal. Indicator light will come on. Field light will stay on and meter will read approximately 12 volts.

Using VRC1000: To check for over Voltage, push the "Over Voltage" switch and the "Lamp Indicator" will turn on between 16.0V and 17.1V. Push the choke drive and the "Choke Drive Indicator Lamp" will turn on, if present.

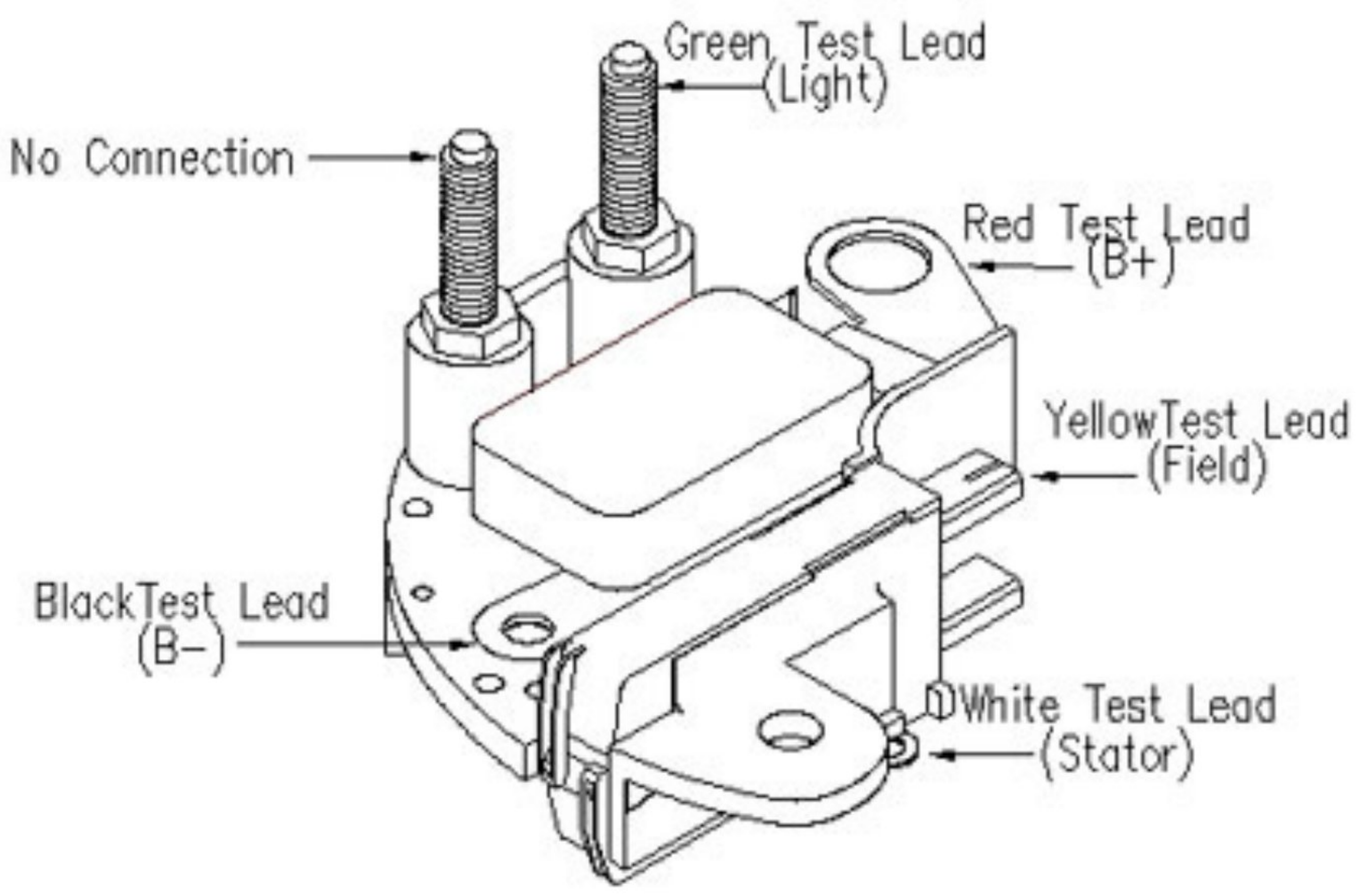

TRANSPO TESTER INSTRUCTIONS

for MAGNETI-MARELLI type regulators

PART NO.	FLD	VOLT	SET POINT	PART NO.	FLD	VOLT	SET POINT
IX118	**A**	**12**	**14.5**				

1. POWER OFF: Set "Voltage Range" and "FLD" switches to desired setting. Connect the voltage regulator as indicated in the diagram below.

2. POWER ON: Field lamp should blink and meter will indicate approximately the set point voltage indicated in the above table.

3. ADDITIONAL TEST: Remove red lead from stator and voltage will remain the same. Field lamp will flicker and 12V lamp come on.

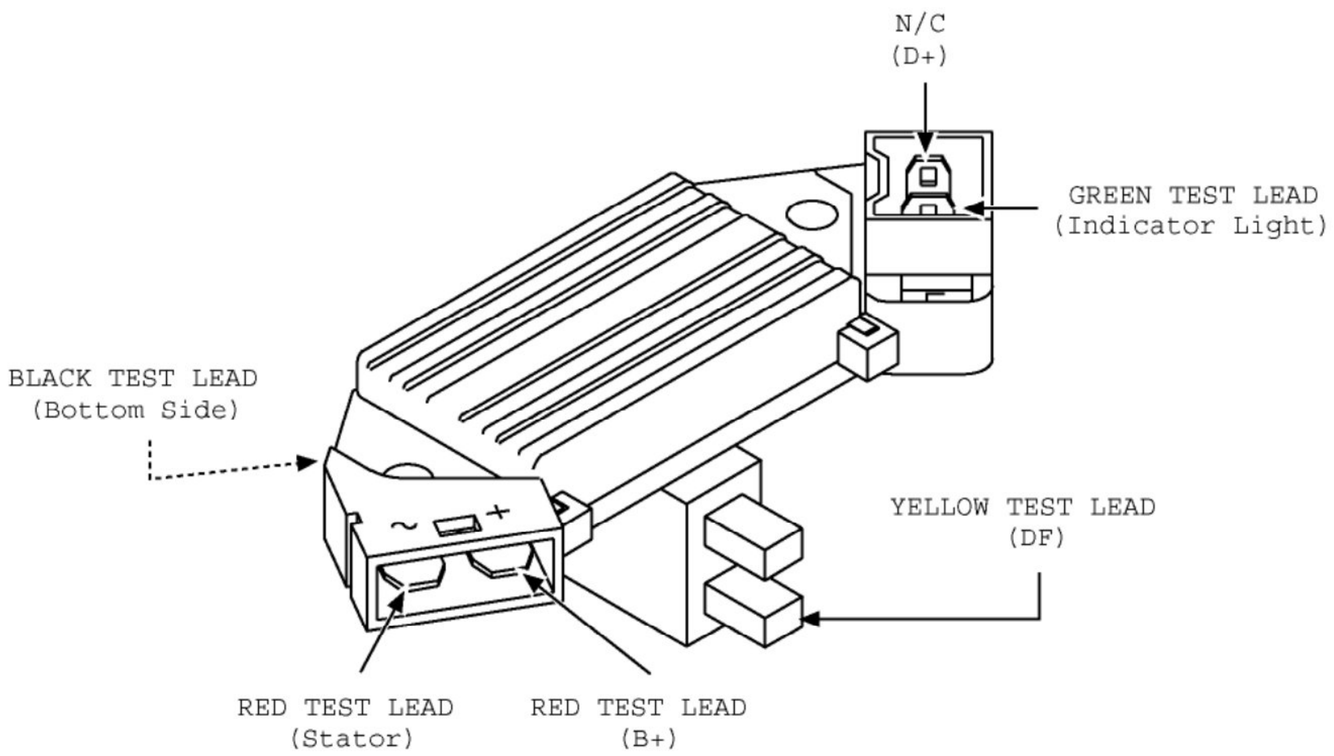

TRANSPO TESTER INSTRUCTIONS

for MAGNETI-MARELLI type regulators

PART NO.	FLD	VOLT	SET POINT	PART NO.	FLD	VOLT	SET POINT
IX131	**A**	**12**	***13.9**				

1. POWER OFF: Set "Voltage Range" and "FLD" switches to desired setting. Connect the voltage regulator as indicated in the diagram below.

2. POWER ON: Field lamp should blink and meter will indicate approximately the set point voltage indicated in the above table.

3. ADDITIONAL TEST: Hook up VRC101-31 and VRC1000A per diagram. Switch VRC101-31 to each position to verify voltages.

*Default voltage testing only For full-function testing, a special adapter box is needed.

1. Switch position 1, set to 12.5 Volts
2. Switch position 2, set to 13.5 Volts
3. Switch position 3, set to 14.5 Volts
4. Switch position 4, set to 15.5 Volts

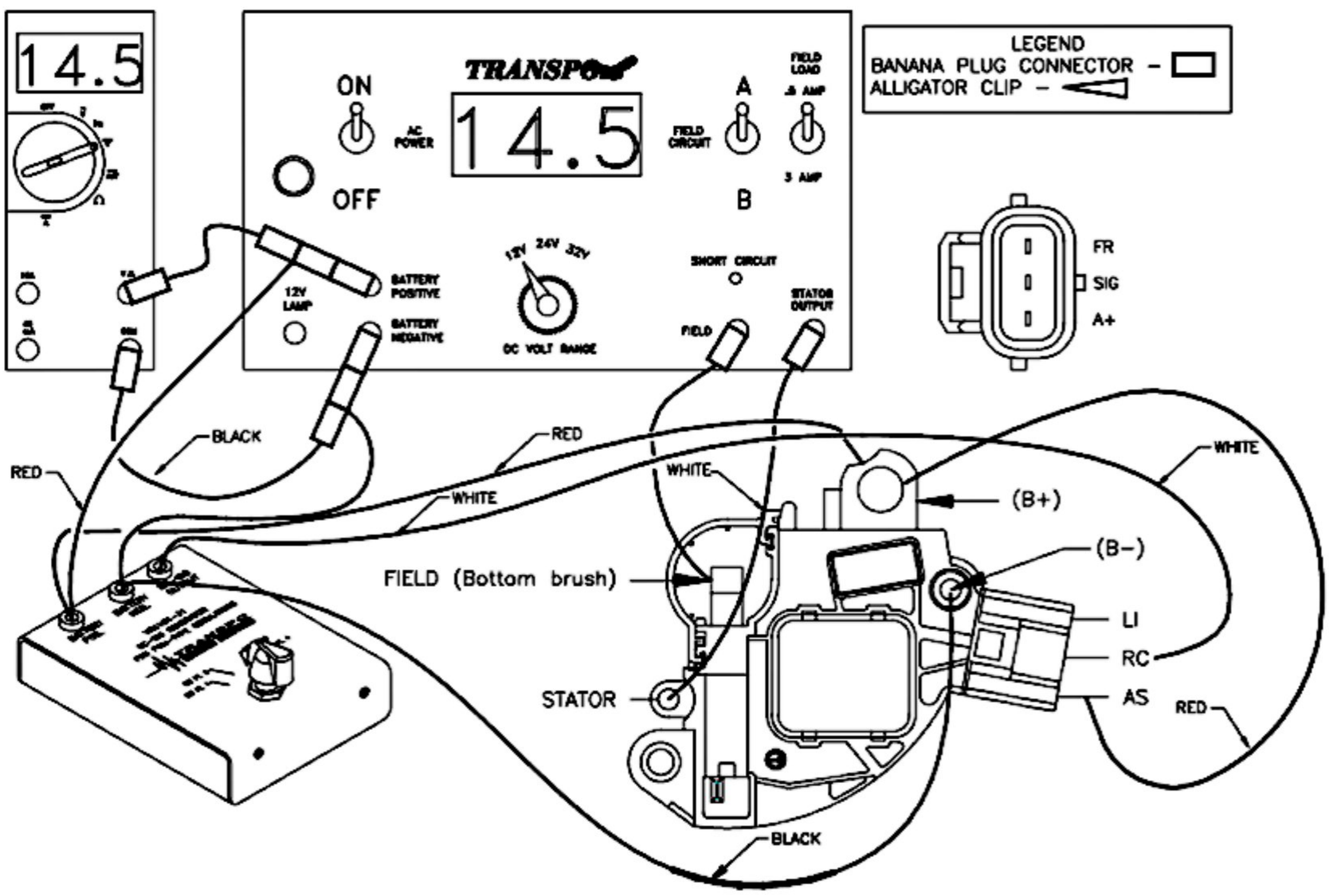

TRANSPO TESTER INSTRUCTIONS

for MAGNETON-PAL type regulators

PART NO.	FLD	VOLT	SET POINT	PART NO.	FLD	VOLT	SET POINT
MP293	**A**	**14**	**28.4**				
MP291	**A**	**12**	**14.4**				

1. POWER OFF: Set "Voltage Range" and "FLD" switches to desired setting. Connect the voltage regulator as indicated in the diagram below.

2. POWER ON: Field lamp should blink and meter will indicate approximately the set point voltage indicated in the above table.

3. ADDITIONAL TEST:

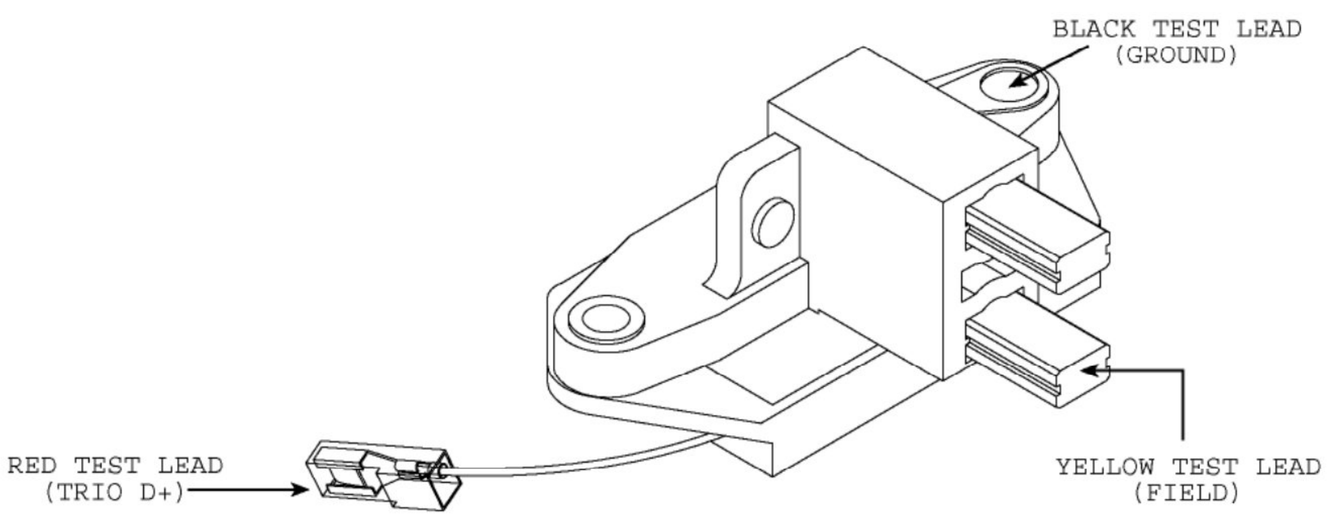

TRANSPO TESTER INSTRUCTIONS

for MAGNETON-PAL type regulators

PART NO.	FLD	VOLT	SET POINT	PART NO.	FLD	VOLT	SET POINT
MP417	**B**	**12**	**14.3**				

1. POWER OFF: Set "Voltage Range" and "FLD" switches to desired setting. Connect the voltage regulator as indicated in the diagram below.

2. POWER ON: Field lamp should blink and meter will indicate approximately the set point voltage indicated in the above table.

3. ADDITIONAL TEST:

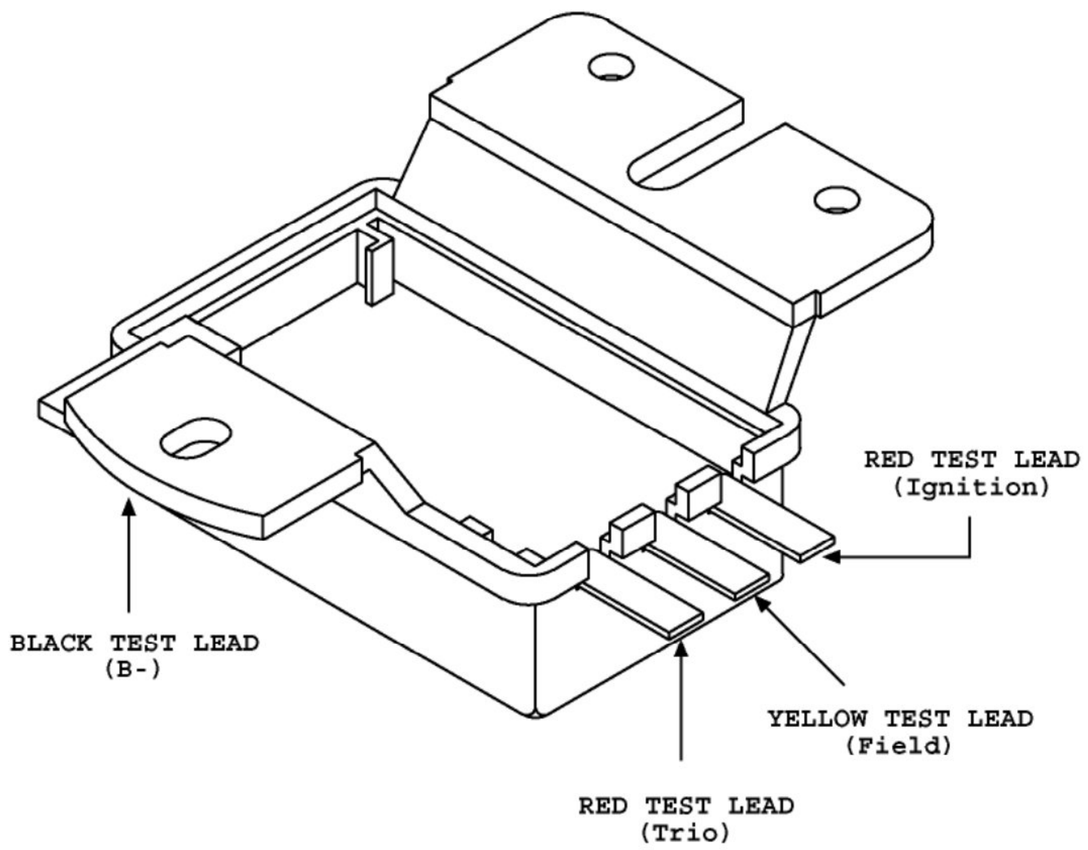

TRANSPO TESTER INSTRUCTIONS

for MAGNETON-PAL type regulators

PART NO.	FLD	VOLT	SET POINT	PART NO.	FLD	VOLT	SET POINT
MP419	**B**	**12**	**14.3**				

1. POWER OFF: Set "Voltage Range" and "FLD" switches to desired setting. Connect the voltage regulator as indicated in the diagram below.

2. POWER ON: Field lamp should blink and meter will indicate approximately the set point voltage indicated in the above table.

3. ADDITIONAL TEST:

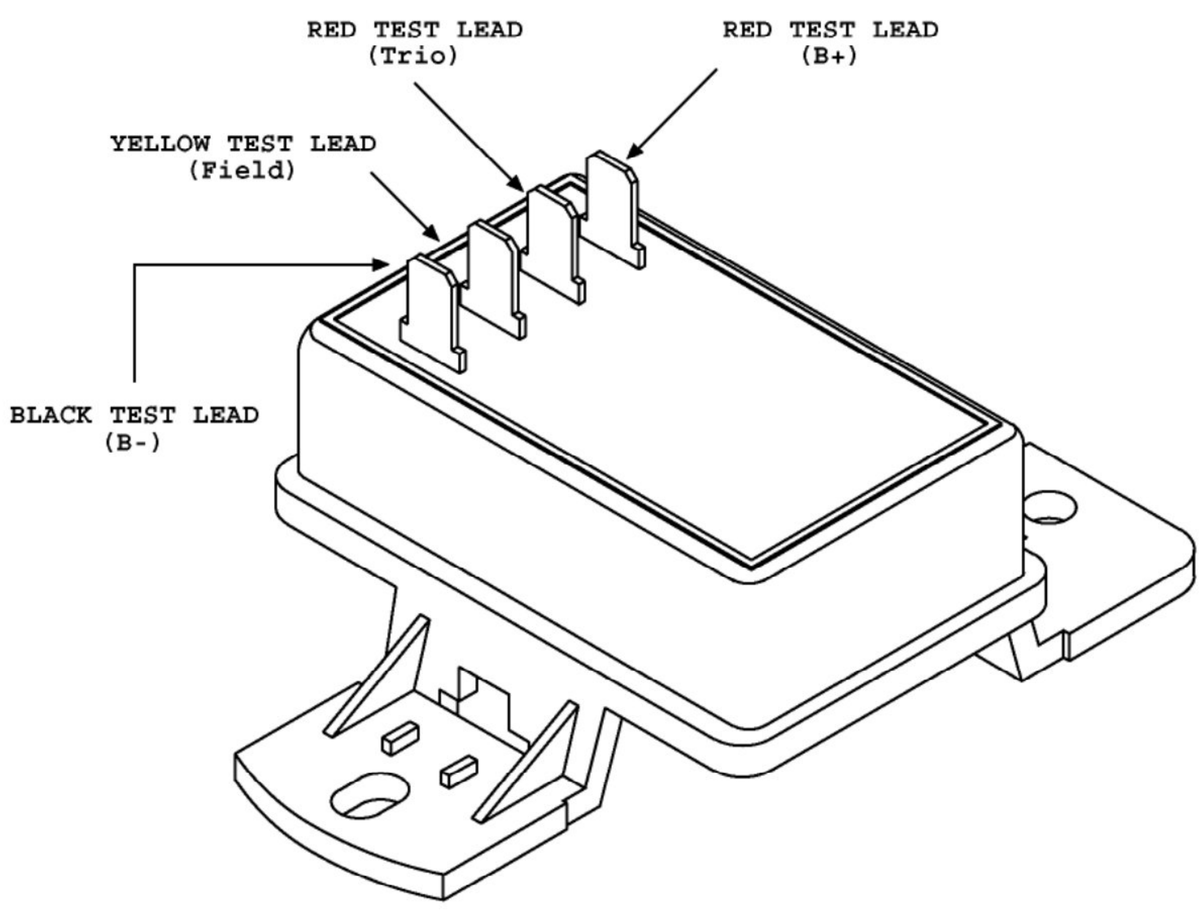

TRANSPO TESTER INSTRUCTIONS

for MANDO type regulators

PART NO.	FLD	VOLT	SET POINT	PART NO.	FLD	VOLT	SET POINT
IY785	**A**	**12**	**14.6**				
IY786	**A**	**12**	**14.6**				

1. POWER OFF: Set "Voltage Range" and "FLD" switches to desired setting. Connect the voltage regulator as indicated in the diagram below.

2. POWER ON: Field lamp should blink and meter will indicate approximately the set point voltage indicated in the above table.

3. ADDITIONAL TEST:

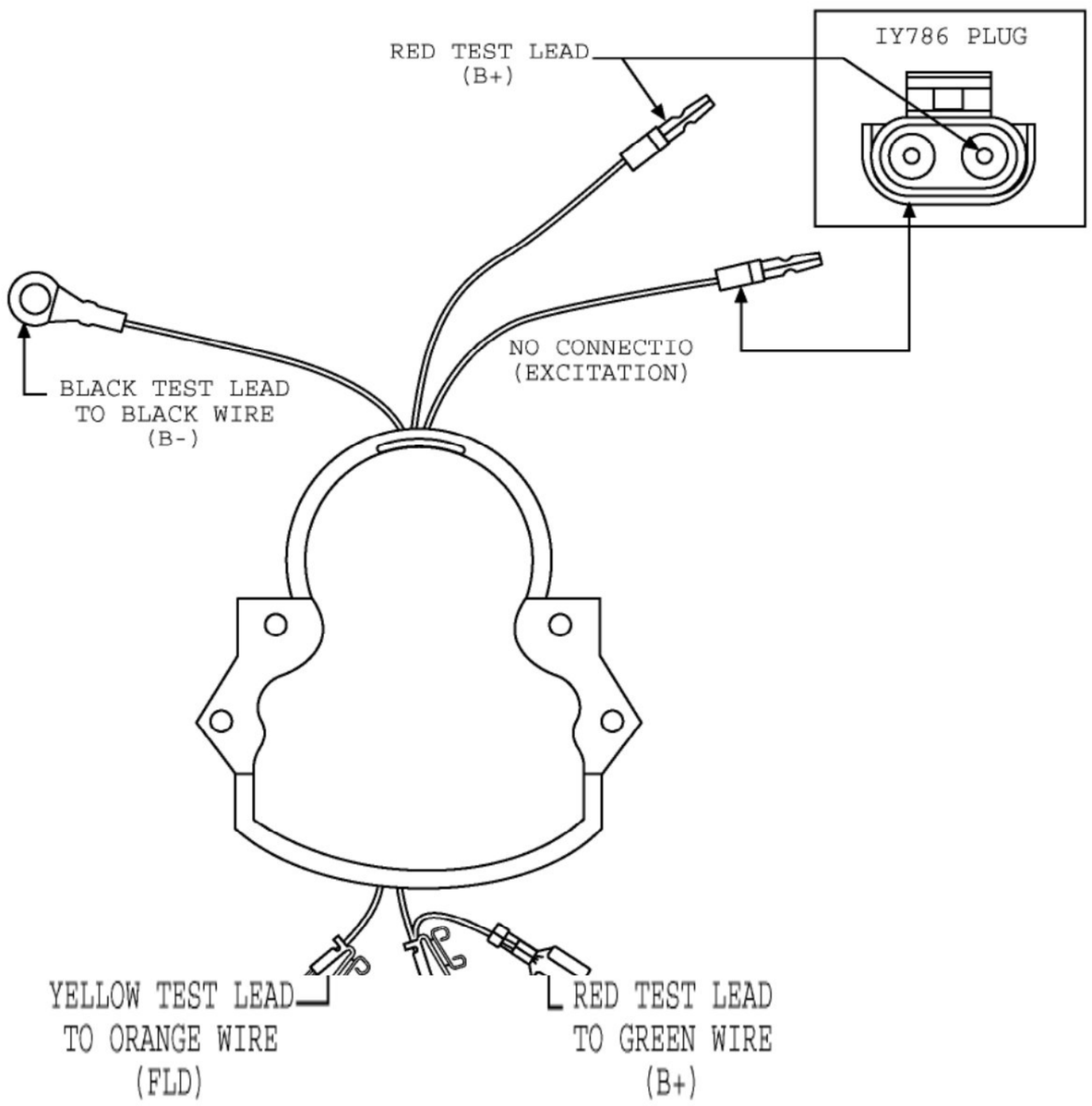

TRANSPO TESTER INSTRUCTIONS

for MANDO type regulators

PART NO.	FLD	VOLT	SET POINT	PART NO.	FLD	VOLT	SET POINT
IY510	**A**	**12**	**14.5**				

1. POWER OFF: Set "Voltage Range" and "FLD" switches to desired setting. Connect the voltage regulator as indicated in the diagram below.

2. POWER ON: Field lamp should blink and meter will indicate approximately the set point voltage indicated in the above table.

3. ADDITIONAL TEST:

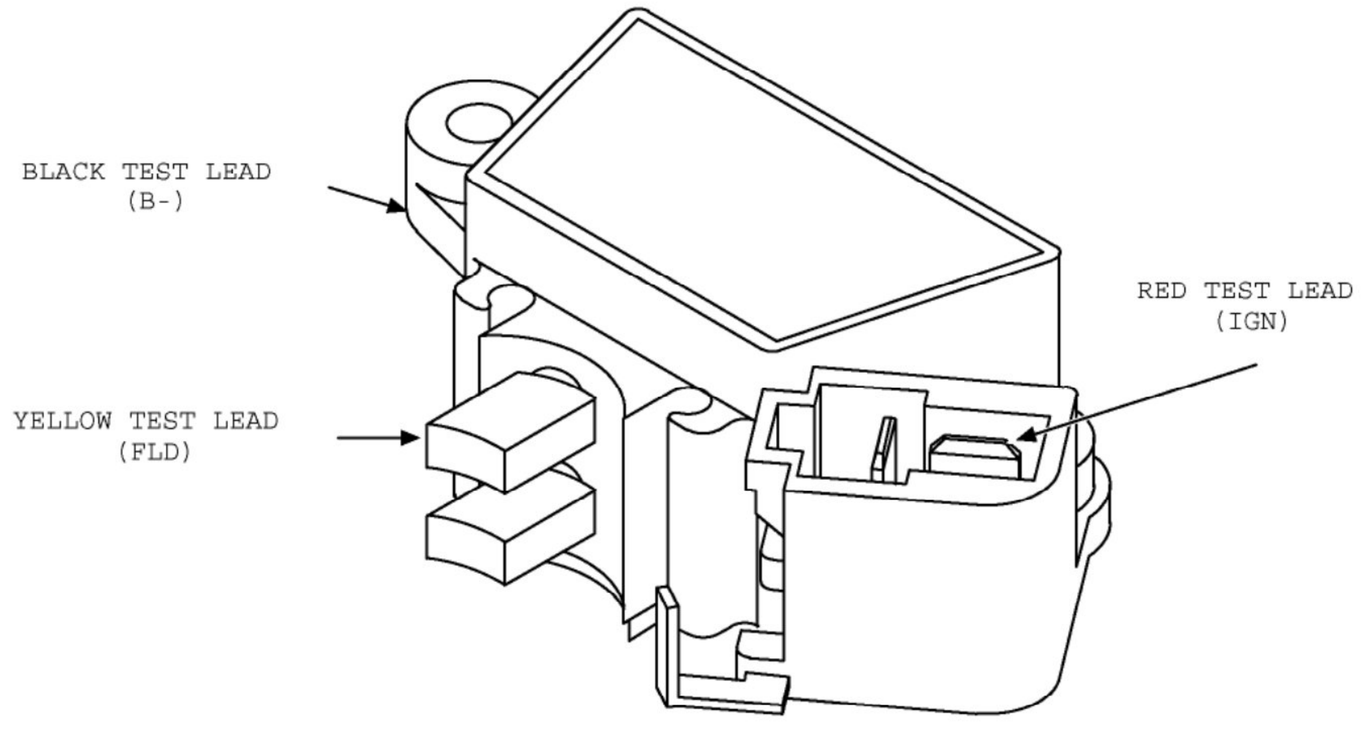

TRANSPO TESTER INSTRUCTIONS

for MANDO type regulators

PART NO.	FLD	VOLT	SET POINT	PART NO.	FLD	VOLT	SET POINT
IY422	**A**	**12**	**14.5**				

1. POWER OFF: Set "Voltage Range" and "FLD" switches to desired setting. Connect the voltage regulator as indicated in the diagram below.

2. POWER ON: Field lamp should blink and meter will indicate approximately the set point voltage indicated in the above table.

3. ADDITIONAL TEST: Disconnect sense (Red) lead, voltage should go to 15.5V.

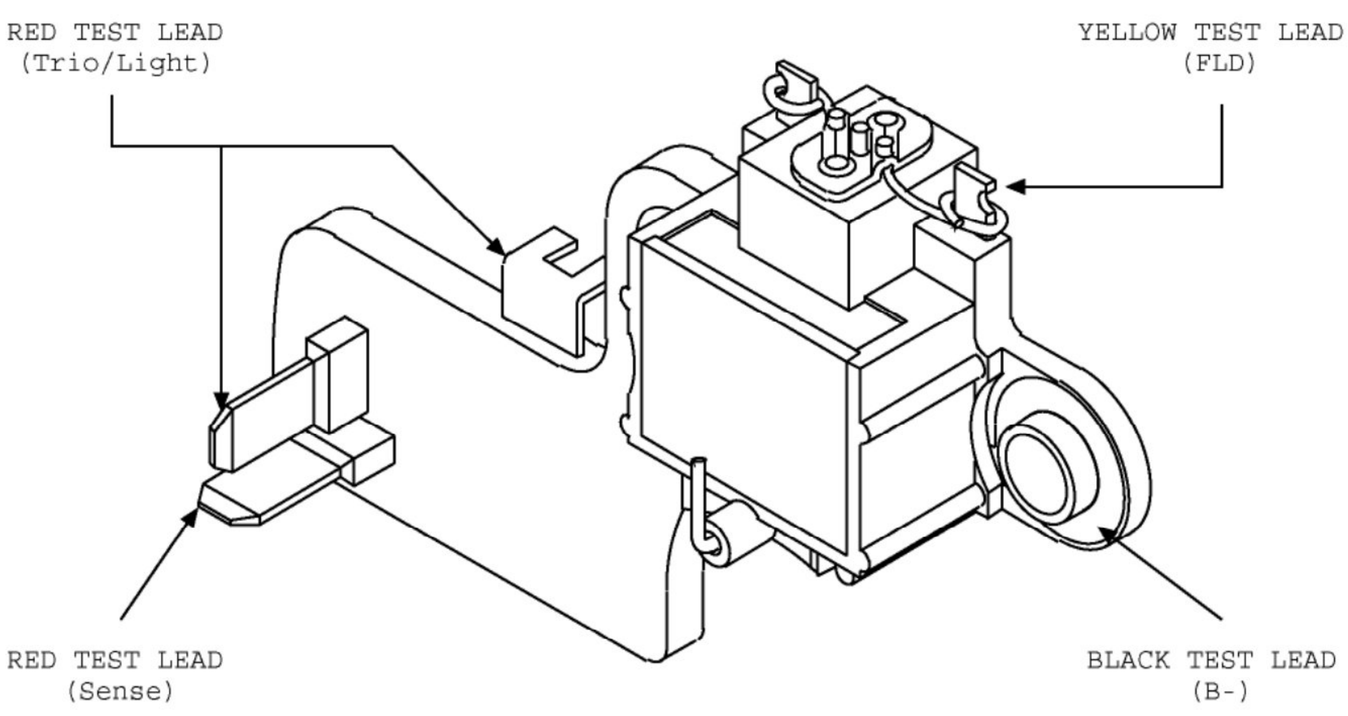

TRANSPO TESTER INSTRUCTIONS

for MANDO type regulators

PART NO.	FLD	VOLT	SET POINT	PART NO.	FLD	VOLT	SET POINT
IY058	**A**	**12**	**14.5**				

1. POWER OFF: Set "Voltage Range" and "FLD" switches to desired setting. Connect the voltage regulator as indicated in the diagram below.

2. POWER ON: Field lamp should blink and meter will indicate approximately the set point voltage indicated in the above table.

3. ADDITIONAL TEST: Remove red test lead from "S" terminal. Voltage will go up to approximately 15.5V.

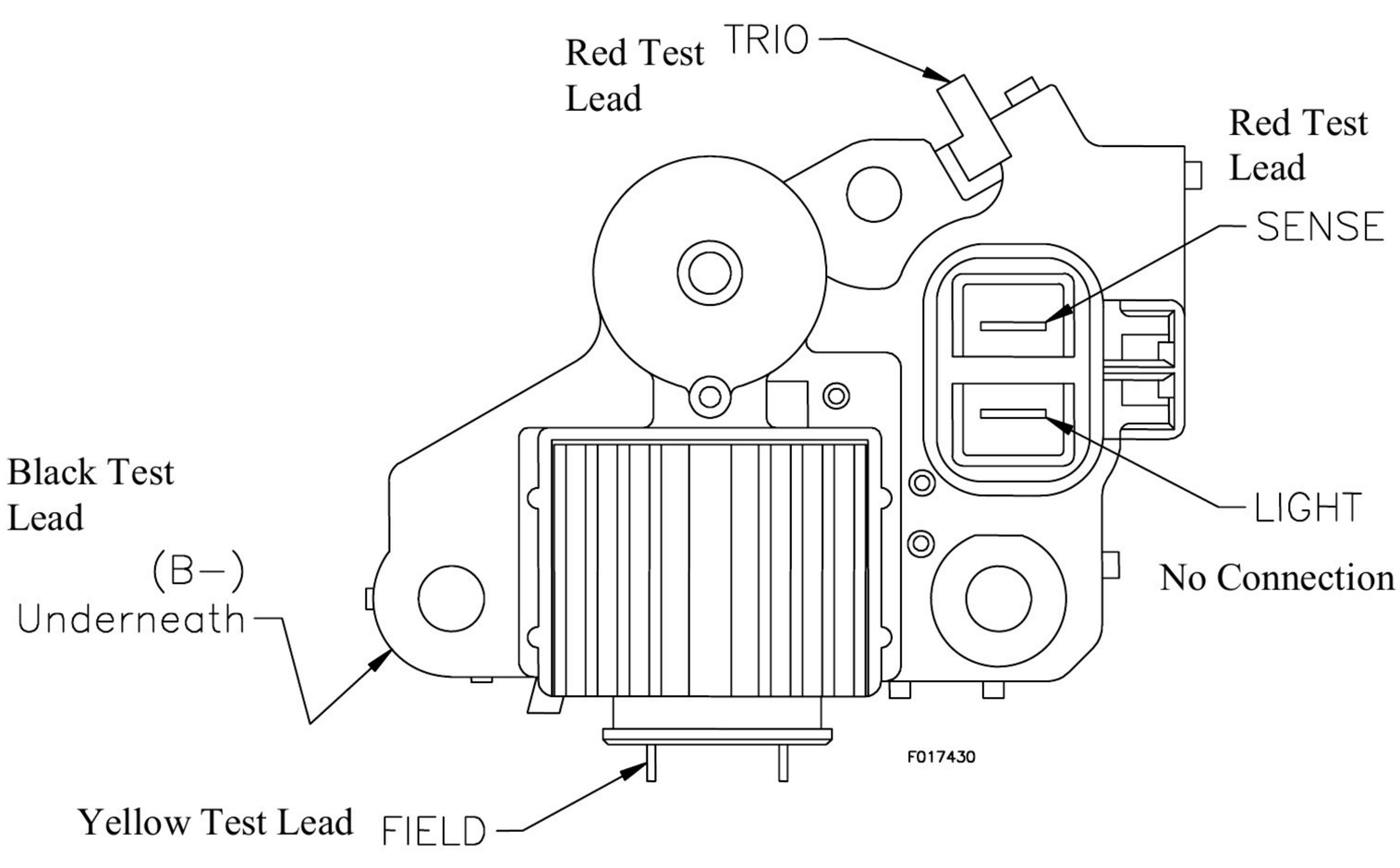

TRANSPO TESTER INSTRUCTIONS

for MANDO type regulators

PART NO.	FLD	VOLT	SET POINT	PART NO.	FLD	VOLT	SET POINT
IY903	**A**	**12**	**14.2**				

1. POWER OFF: Set "Voltage Range" and "FLD" switches to desired setting. Connect the voltage regulator as indicated in the diagram below.

2. POWER ON: Field lamp should blink and meter will indicate approximately the set point voltage indicated in the above table.

3. ADDITIONAL TEST: Remove red test lead from "S" terminal. Voltage will go up to approximately 15.5V.

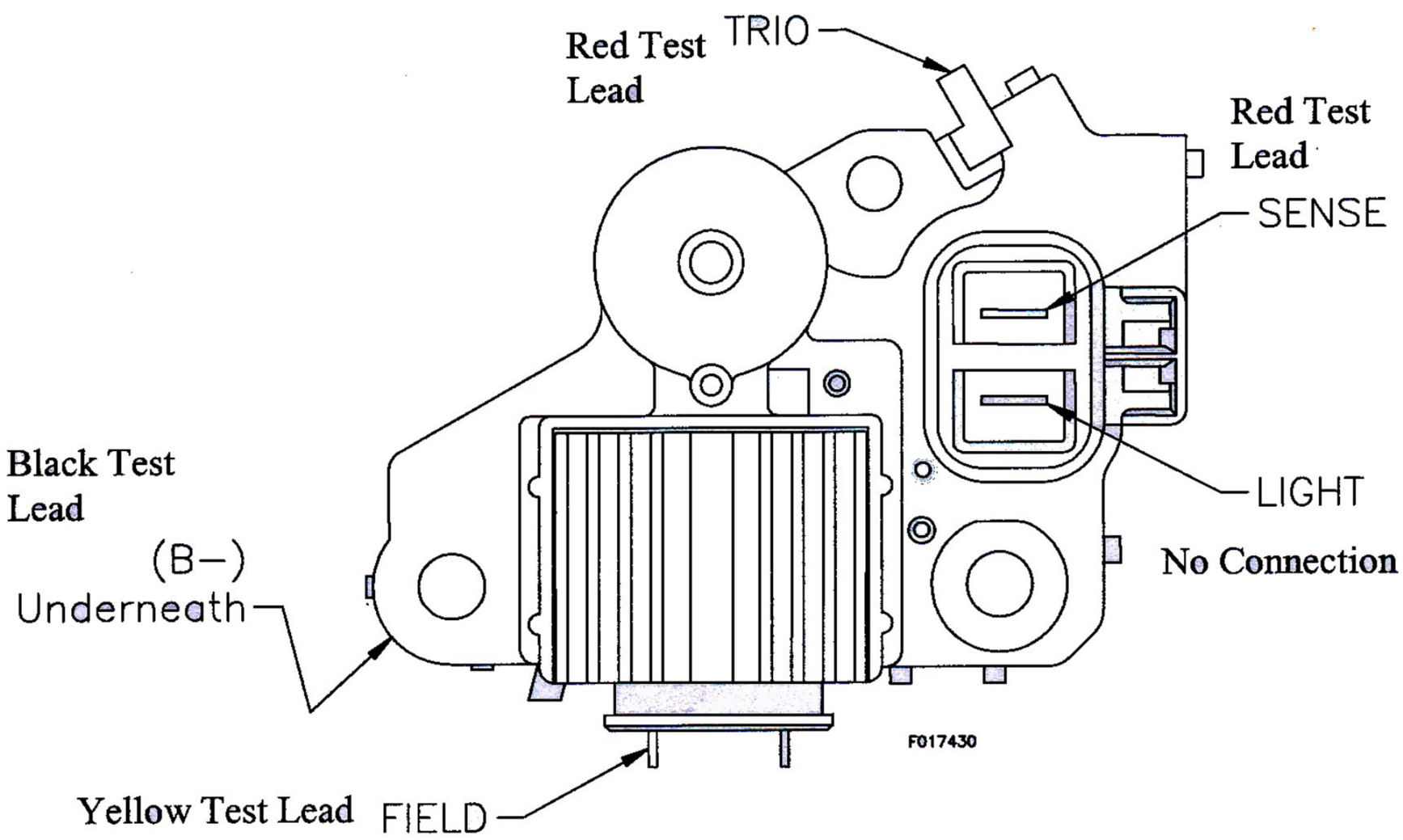

TRANSPO TESTER INSTRUCTIONS

for MITSUBISHI type regulators

PART NO.	FLD	VOLT	SET POINT	PART NO.	FLD	VOLT	SET POINT
IM204	**A**	**12**	**14.6**				
IM204HD	**A**	**12**	**14.6**				
IM205	**A**	**12**	**14.6**				
IM225	**A**	**12**	**14.3**				

1. POWER OFF: Set "Voltage Range" and "FLD" switches to desired setting. Connect the voltage regulator as indicated in the diagram below.

2. POWER ON: Field lamp should blink and meter will indicate approximately the set point voltage indicated in the above table.

3. ADDITIONAL TEST: On IM225 regulator, remove red test lead from terminal marked "*". Field lamp should still blink and the meter will indicate approximately 15.4V.

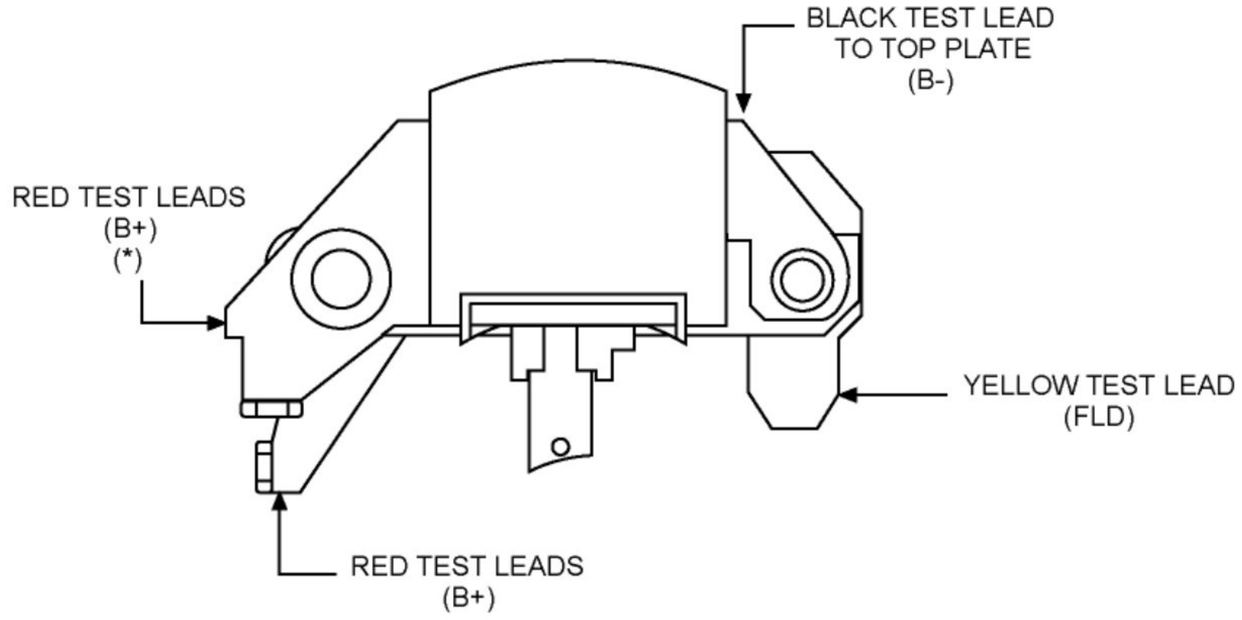

TRANSPO TESTER INSTRUCTIONS

for MITSUBISHI type regulators

PART NO.	FLD	VOLT	SET POINT	PART NO.	FLD	VOLT	SET POINT
IM224	**A**	**12**	**14.2**				

1. POWER OFF: Set "Voltage Range" and "FLD" switches to desired setting. Connect the voltage regulator as indicated in the diagram below.

2. POWER ON: Field lamp should blink and meter will indicate approximately the set point voltage indicated in the above table.

3. ADDITIONAL TEST: Connect another black test lead to terminal marker "Quick Start". Field lamp should still blink and the meter will indicate approximately 13.0V.

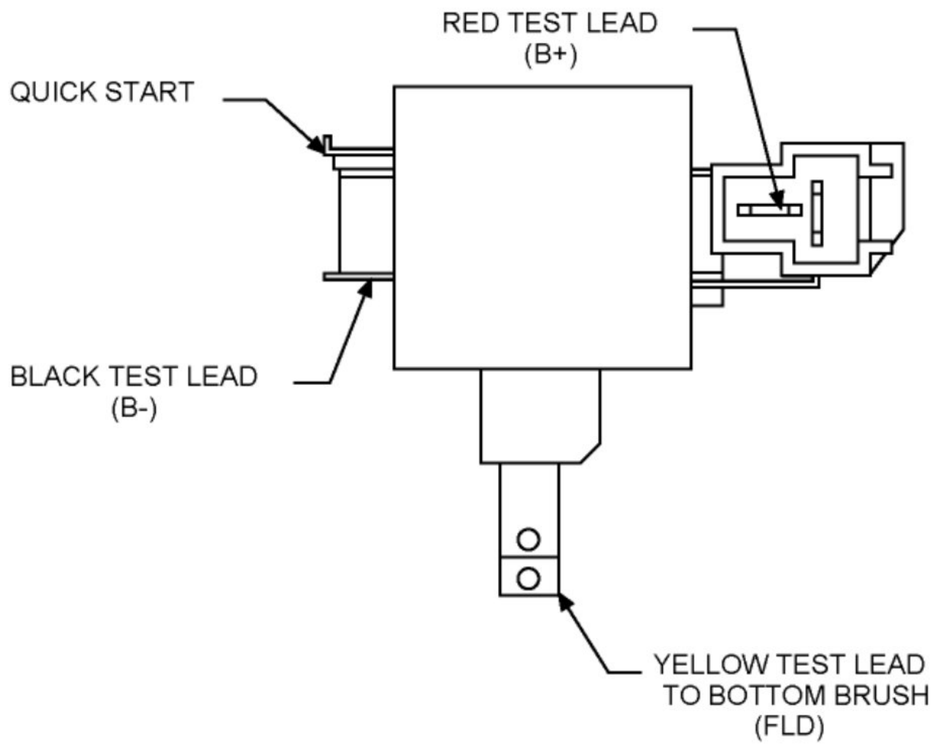

TRANSPO TESTER INSTRUCTIONS

for MITSUBISHI type regulators

PART NO.	FLD	VOLT	SET POINT	PART NO.	FLD	VOLT	SET POINT
IM216	**A**	**12**	**14.5**	**IM217**	**A**	**12**	**14.3**
IM216HD	**A**	**12**	**14.5**				
IM289	**A**	**12**	**14.5**				
IM217HD	**A**	**12**	**14.3**				

1. POWER OFF: Set "Voltage Range" and "FLD" switches to desired setting. Connect the voltage regulator as indicated in the diagram below.

2. POWER ON: Field lamp should blink and meter will indicate approximately the set point voltage indicated in the above table.

3. ADDITIONAL TEST: On IM217 Regulator, remove red test lead from terminal marked "*". Field lamp should still blink and the meter will indicate approximately 15.4V.

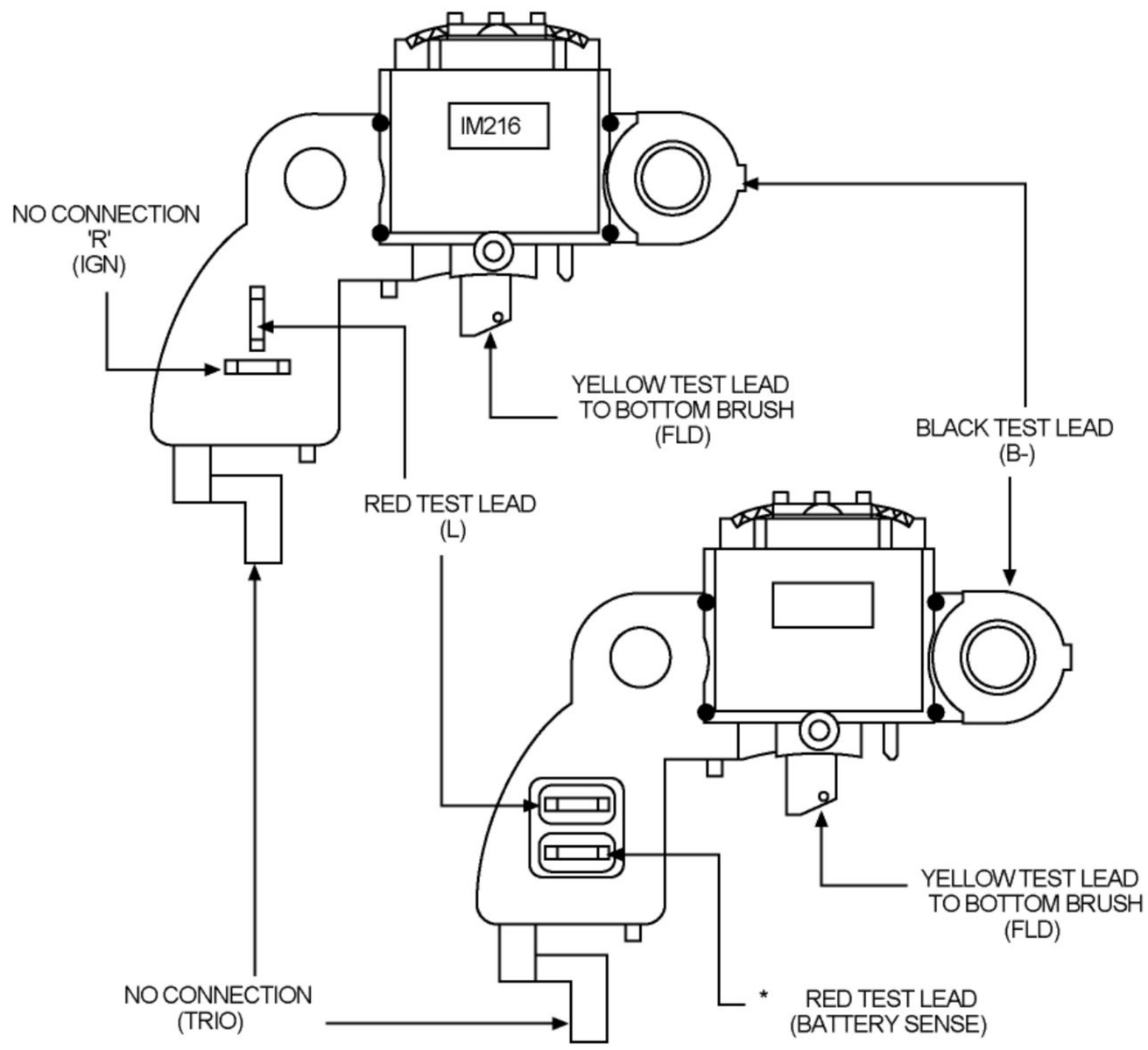

TRANSPO TESTER INSTRUCTIONS

for MITSUBISHI type regulators

PART NO.	FLD	VOLT	SET POINT	PART NO.	FLD	VOLT	SET POINT
IM268	**A**	**12**	**14.5**				
IM270	**A**	**12**	**14.5**				

1. POWER OFF: Set "Voltage Range" and "FLD" switches to desired setting. Connect the voltage regulator as indicated in the diagram below.

2. POWER ON: Field lamp should blink and meter will indicate approximately the set point voltage indicated in the above table.

3. ADDITIONAL TEST: On IM268, removal of red test lead from terminal marked "A" should result in the indicator light to turn on and the meter will indicate approximately 15.7V. On IM270, Removal of test lead "A" terminal should result in the meter to indicate approximately 15.7V.

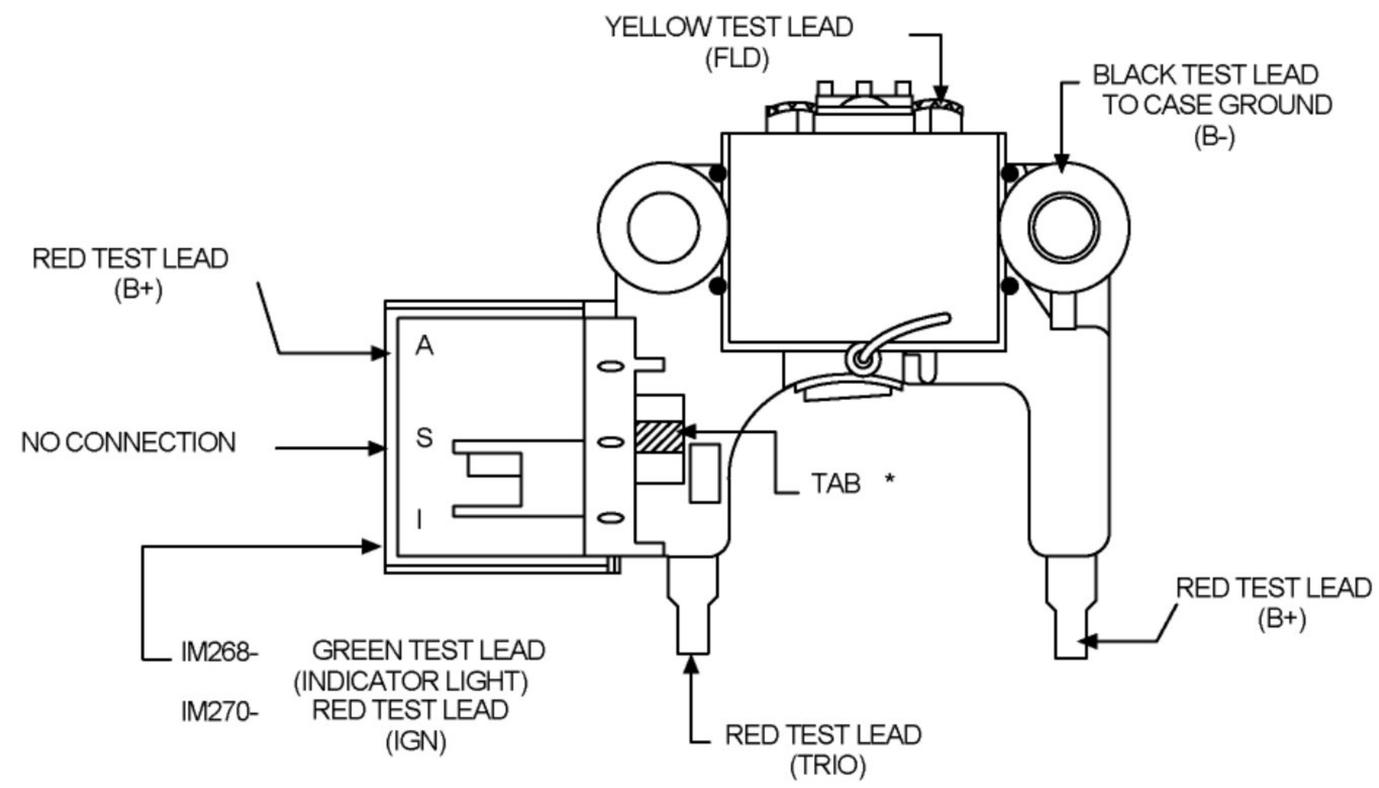

* NOTE:
IF THE TAB IS CUT, IT IS AN IM268
IF INTACT, IT IS AN IM270

TRANSPO TESTER INSTRUCTIONS

for MITSUBISHI type regulators

PART NO.	FLD	VOLT	SET POINT	PART NO.	FLD	VOLT	SET POINT
IM542	**B**	**12**	**14.3**				
IM951	**B**	**12**	**14.3**				
IM954	**B**	**12**	**14.3**				
IM952	**B**	**12**	**14.3**				

1. POWER OFF: Set "Voltage Range" and "FLD" switches to desired setting. Connect the voltage regulator as indicated in the diagram below.

2. POWER ON: Field lamp should blink and meter will indicate approximately the set point voltage indicated in the above table.

3. ADDITIONAL TEST: Remove Red test lead from terminal marked "STA". Indicator light should turn on and the meter will indicate the set point voltage.

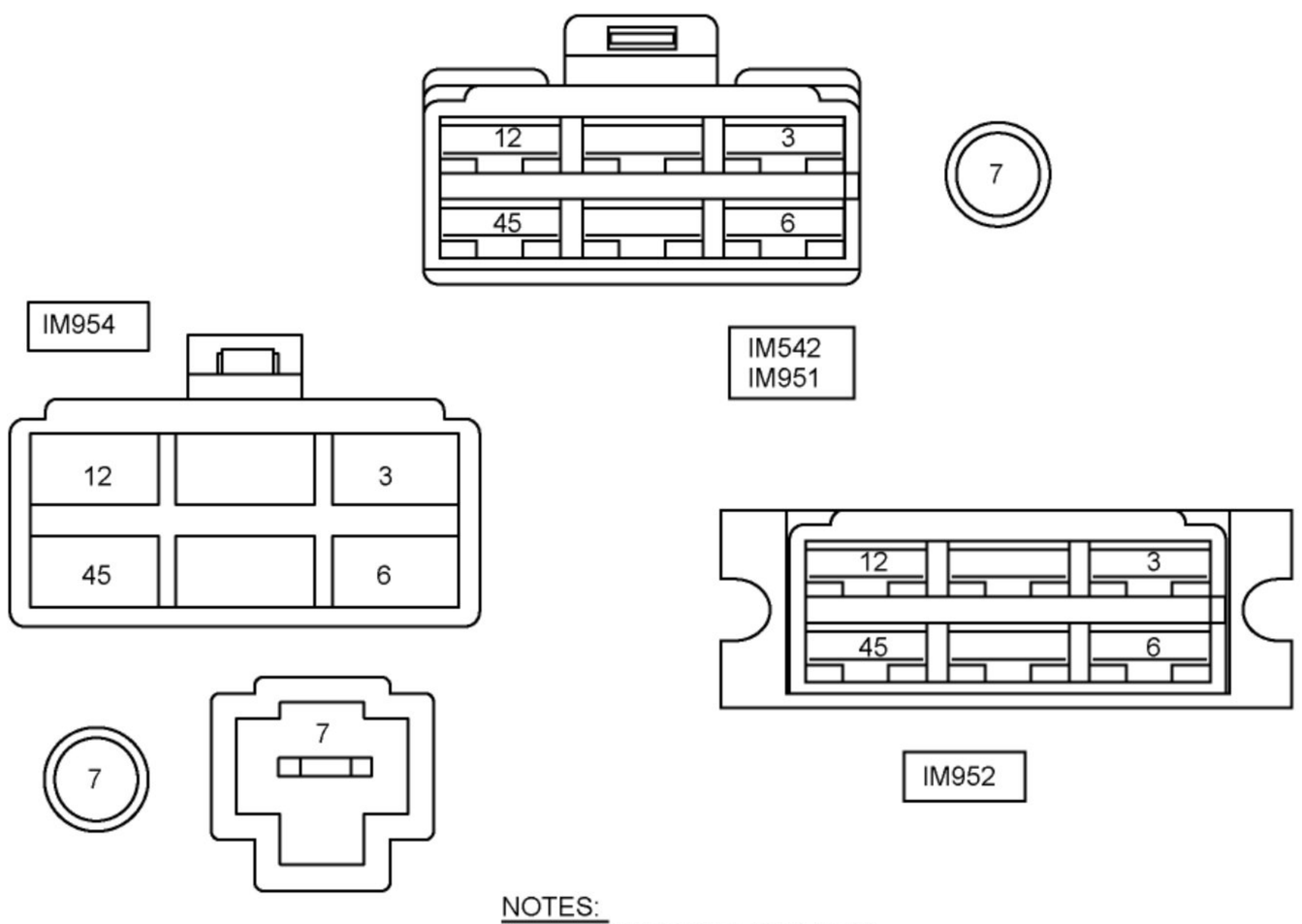

NOTES:
1- RED TEST LEAD (IGN)
2- YELLOW TEST LEAD (FLD)
3- GREEN TEST LEAD (I.L.)
4- RED TEST LEAD (B+)
5- RED TEST LEAD (STA)
6- BLACK TEST LEAD (B-)
7- NO CONNECTION

TRANSPO TESTER INSTRUCTIONS

for MITSUBISHI type regulators

PART NO.	FLD	VOLT	SET POINT	PART NO.	FLD	VOLT	SET POINT
IM261	**A**	**12**	**14.5**				
IM269	**A**	**12**	**14.5**				

1. POWER OFF: Set "Voltage Range" and "FLD" switches to desired setting. Connect the voltage regulator as indicated in the diagram below.

2. POWER ON: Field lamp should blink and meter will indicate approximately the set point voltage indicated in the above table.

3. ADDITIONAL TEST: On IM261, remove red test lead from the terminal marked "*". Field lamp should still blink and the meter will indicated approximately 15.4 v.

IM261 (S&L)
IM269 (R&L)

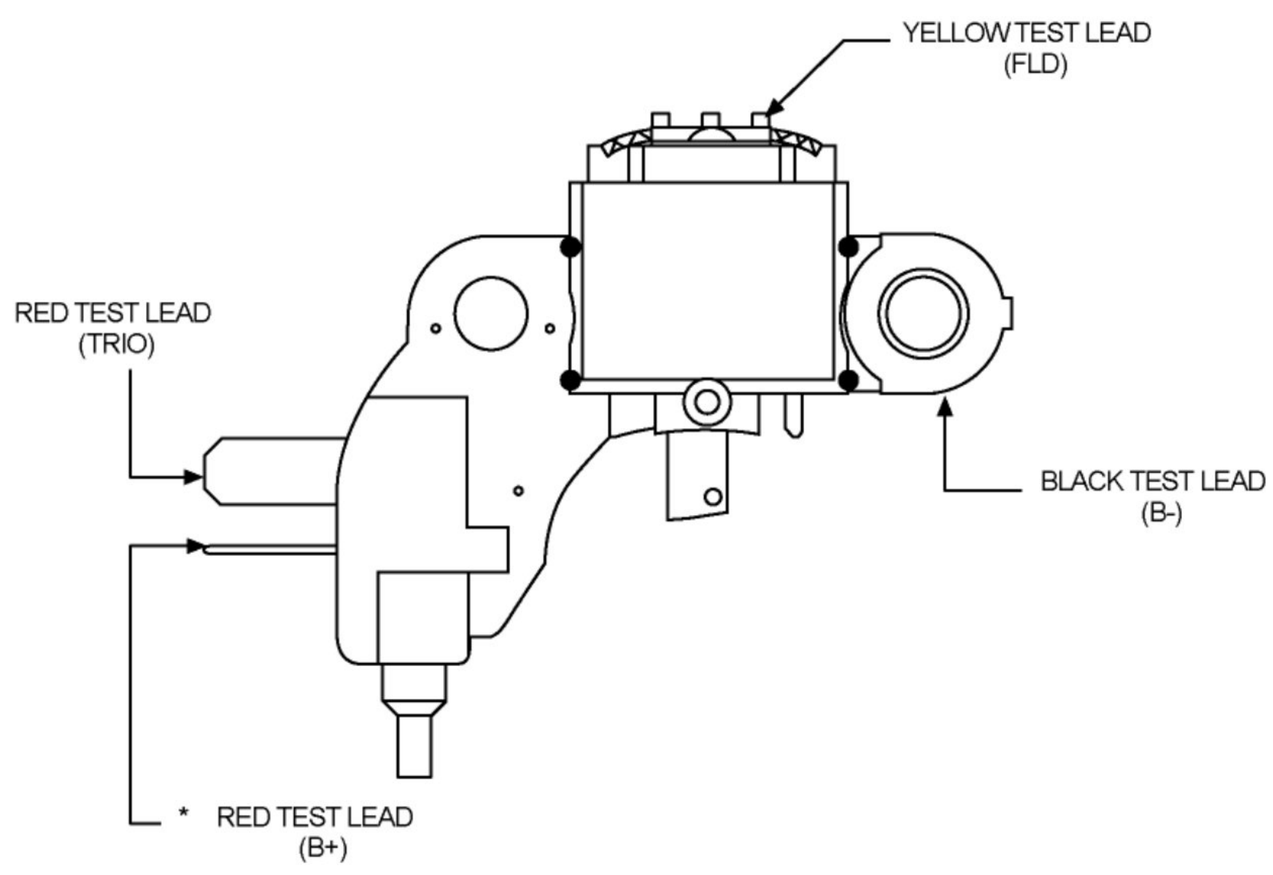

TRANSPO TESTER INSTRUCTIONS

for MITSUBISHI type regulators

PART NO.	FLD	VOLT	SET POINT	PART NO.	FLD	VOLT	SET POINT
IM604	**B**	**12**	**14.3**				

1. POWER OFF: Set "Voltage Range" and "FLD" switches to desired setting. Connect the voltage regulator as indicated in the diagram below.

2. POWER ON: Field lamp should blink and meter will indicate approximately the set point voltage indicated in the above table.

3. ADDITIONAL TEST: Remove red test lead from terminal marked "STA". Indicator light should turn on and the meter will indicate set point voltage.

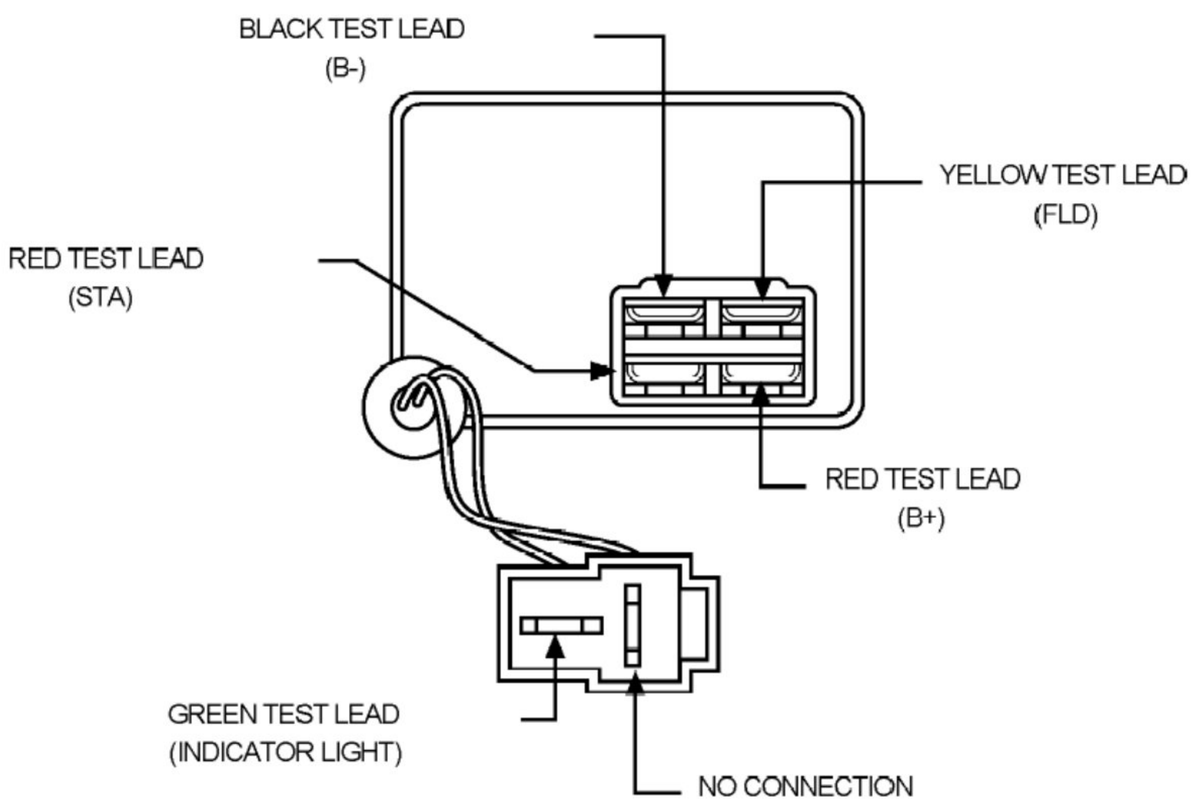

TRANSPO TESTER INSTRUCTIONS

for MITSUBISHI type regulators

PART NO.	FLD	VOLT	SET POINT	PART NO.	FLD	VOLT	SET POINT
IM262	**A**	**12**	**14.5**				
IM263	**A**	**12**	**14.5**				
IM265	**A**	**12**	**14.5**				
IM265HD	**A**	**12**	**14.5**				

1. POWER OFF: Set "Voltage Range" and "FLD" switches to desired setting. Connect the voltage regulator as indicated in the diagram below.

2. POWER ON: Field lamp should blink and meter will indicate approximately the set point voltage indicated in the above table.

3. ADDITIONAL TEST: Remove red test lead from terminal marked "S". Field lamp should still blink and the meter will indicate approximately 1.5V above the set point voltage.

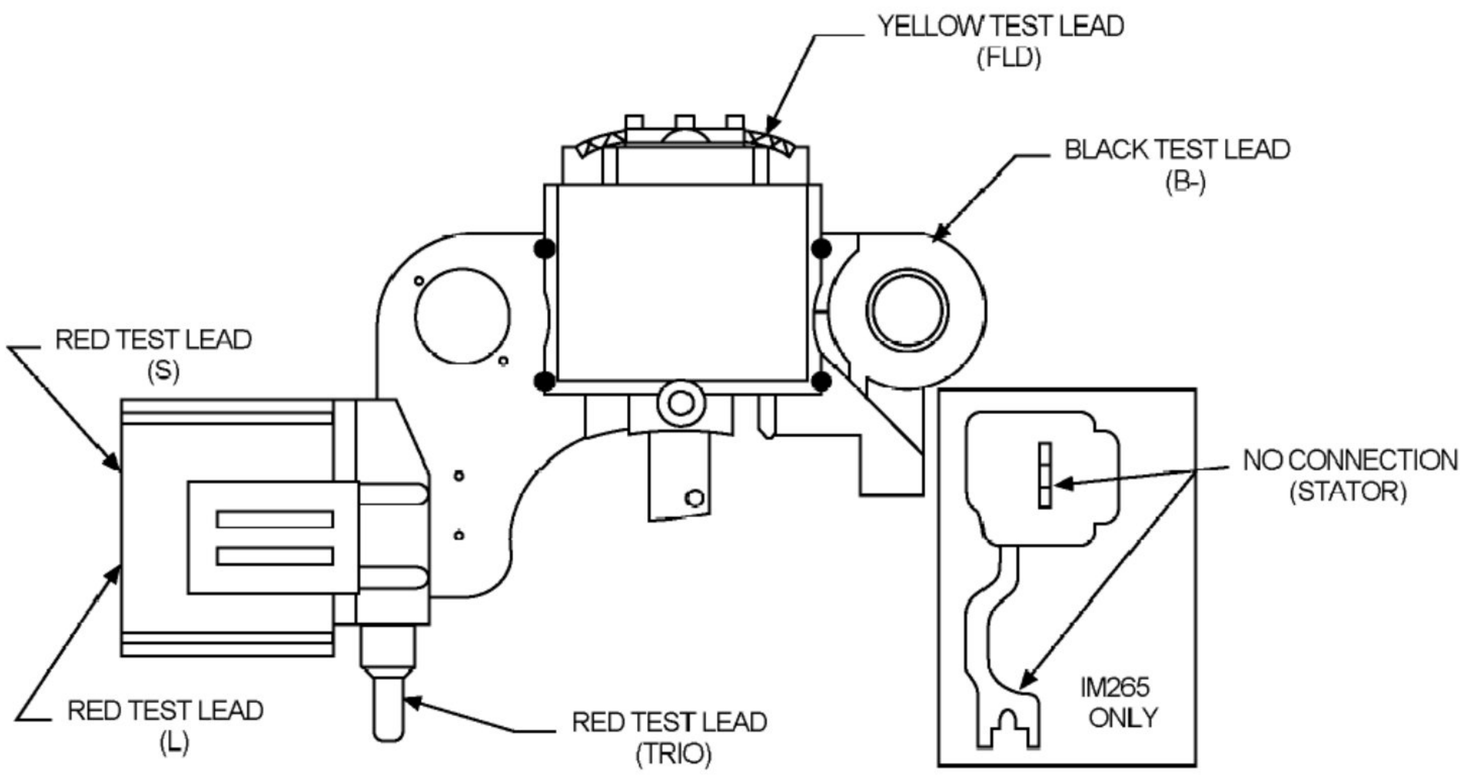

TRANSPO TESTER INSTRUCTIONS

for MITSUBISHI type regulators

PART NO.	FLD	VOLT	SET POINT	PART NO.	FLD	VOLT	SET POINT
IM266	**A**	**12**	**14.5**				
IM266HD	**A**	**12**	**14.5**				

1. POWER OFF: Set "Voltage Range" and "FLD" switches to desired setting. Connect the voltage regulator as indicated in the diagram below.

2. POWER ON: Field lamp should blink and meter will indicate approximately the set point voltage indicated in the above table.

3. ADDITIONAL TEST:

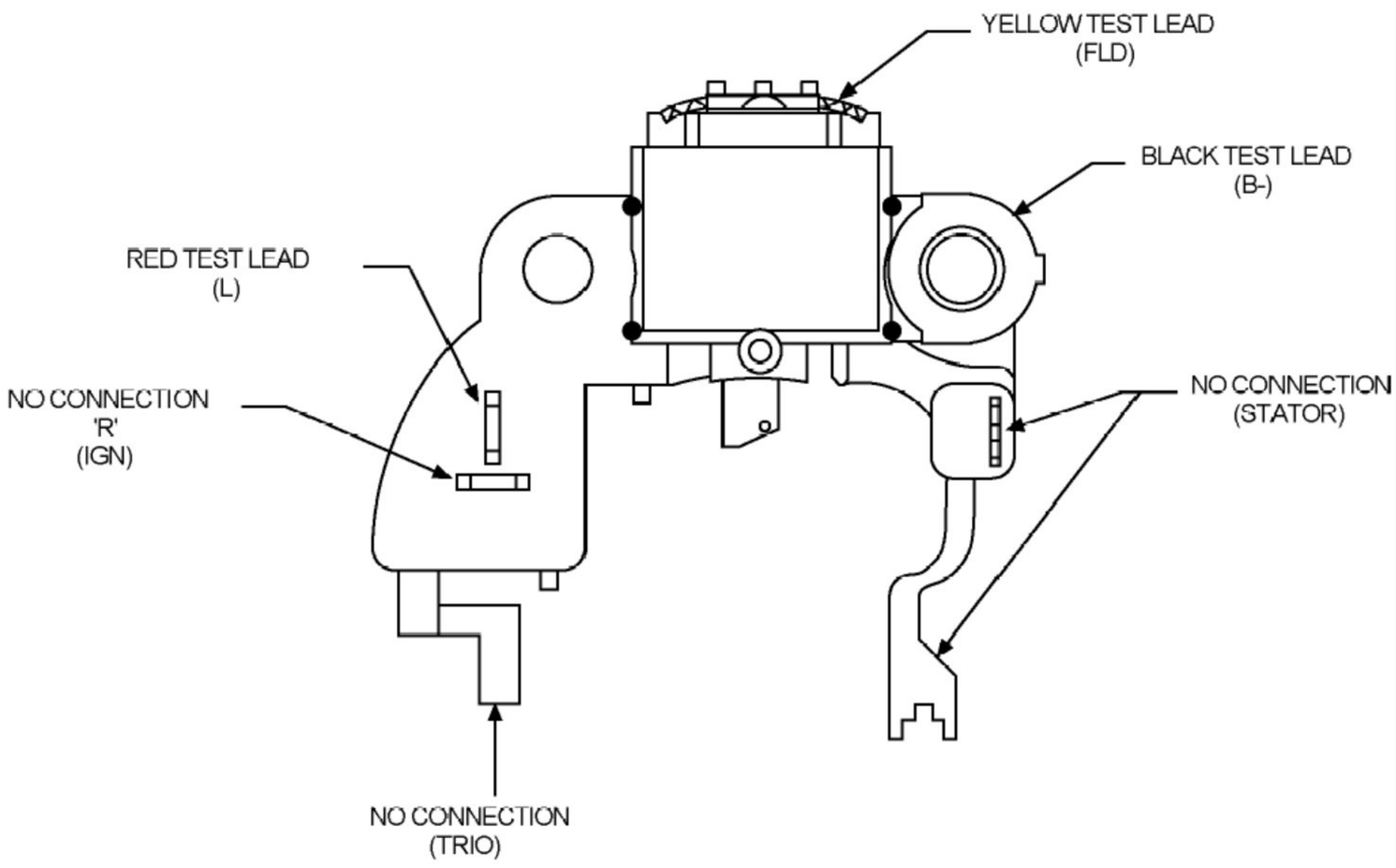

TRANSPO TESTER INSTRUCTIONS

for MITSUBISHI type regulators

PART NO.	FLD	VOLT	SET POINT	PART NO.	FLD	VOLT	SET POINT
IM267	**A**	**12**	**14.5**				

1. POWER OFF: Set "Voltage Range" and "FLD" switches to desired setting. Connect the voltage regulator as indicated in the diagram below.

2. POWER ON: Field lamp should blink and meter will indicate approximately the set point voltage indicated in the above table.

3. ADDITIONAL TEST: Remove red test lead from terminal marked "C" and connect a black test lead to it . Field lamp should still blink and the meter will indicate approximately 12.5V.

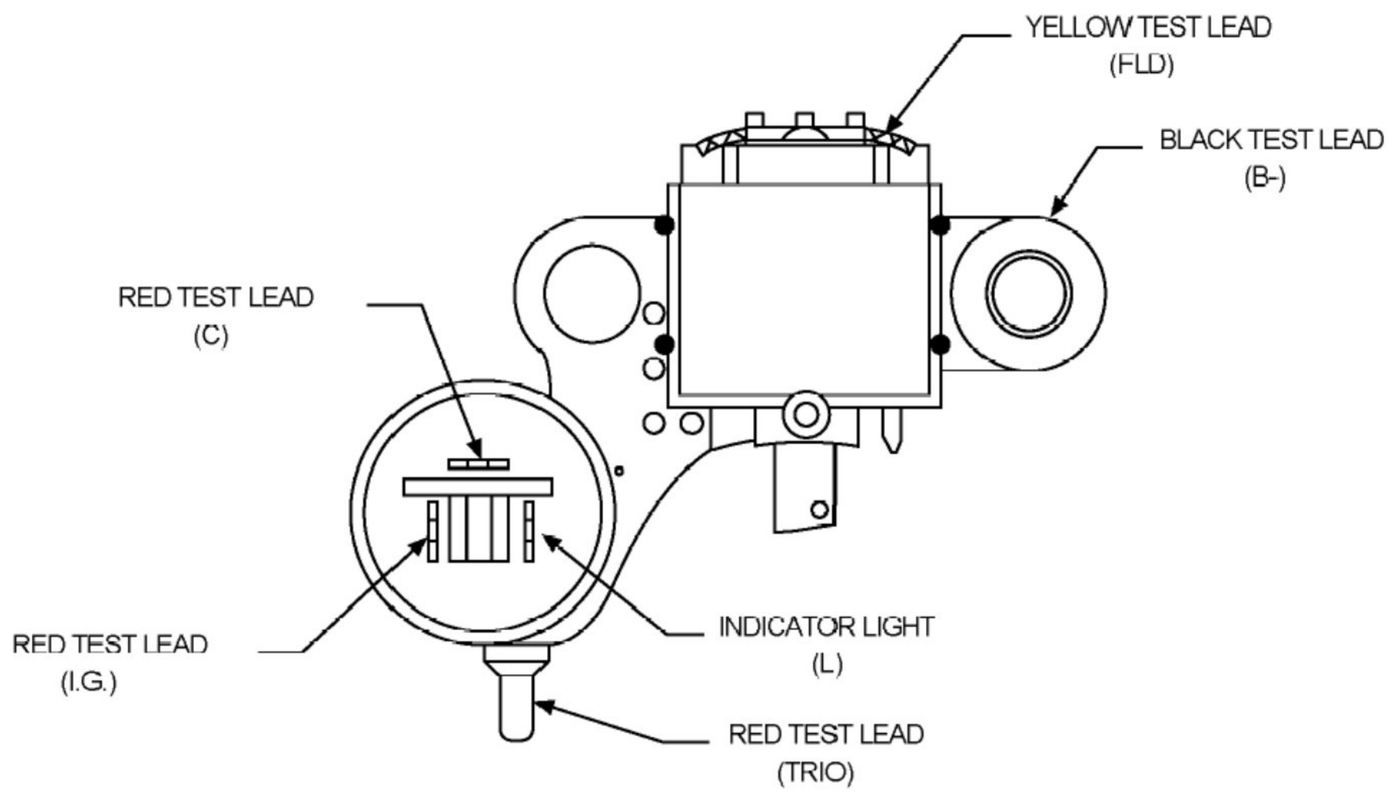

TRANSPO TESTER INSTRUCTIONS

for MITSUBISHI type regulators

PART NO.	FLD	VOLT	SET POINT	PART NO.	FLD	VOLT	SET POINT
IM271	**A**	**12**	**14.4**				

1. POWER OFF: Set "Voltage Range" and "FLD" switches to desired setting. Connect the voltage regulator as indicated in the diagram below.

2. POWER ON: Field lamp should blink and meter will indicate approximately the set point voltage indicated in the above table.

3. ADDITIONAL TEST: Remove red test lead from terminal marked "S". Field lamp should still blink, indicator light turn on and the meter will indicate approximately 15.5V.

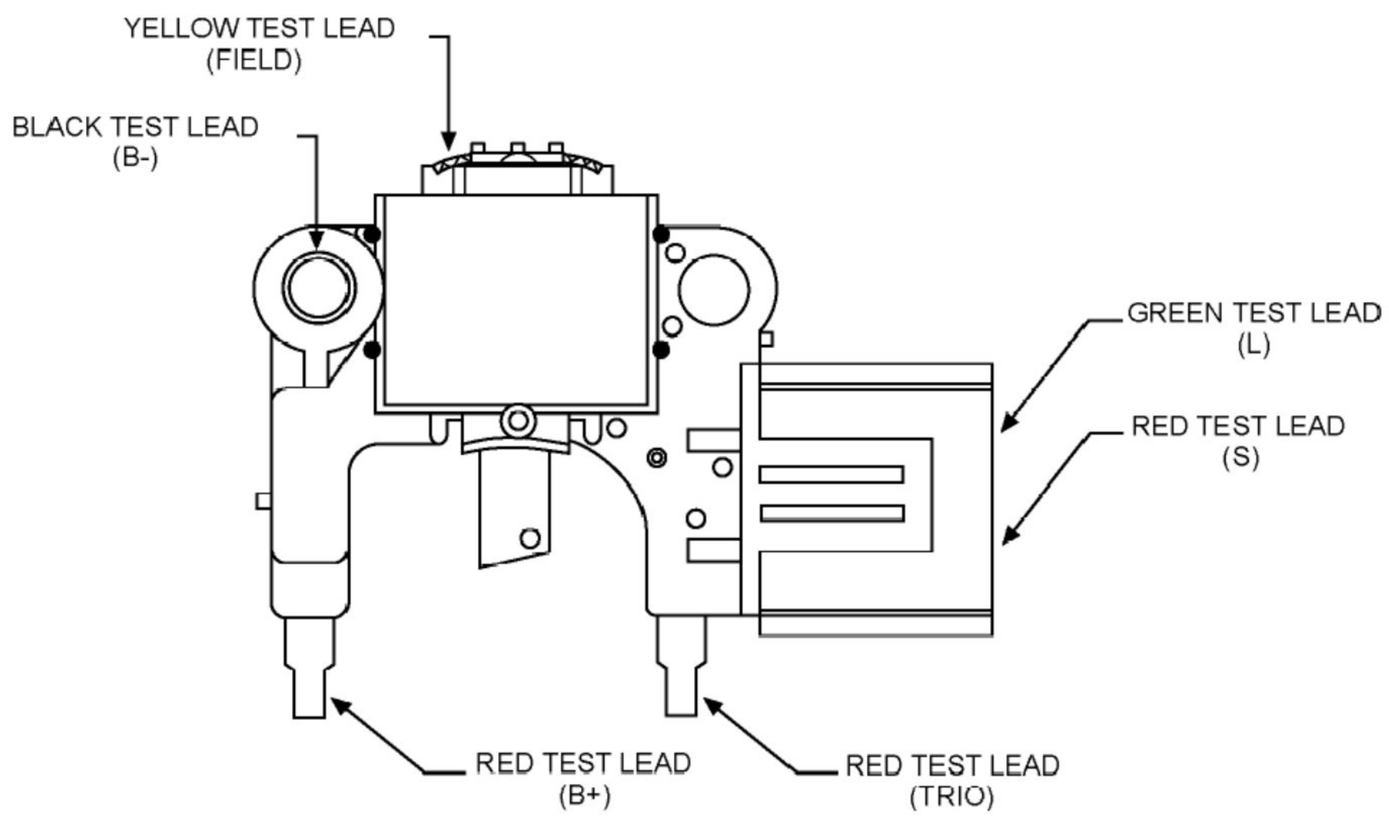

TRANSPO TESTER INSTRUCTIONS

for MITSUBISHI type regulators

PART NO.	FLD	VOLT	SET POINT	PART NO.	FLD	VOLT	SET POINT
IM272	**A**	**12**	**14.4**				

1. POWER OFF: Set "Voltage Range" and "FLD" switches to desired setting. Connect the voltage regulator as indicated in the diagram below.

2. POWER ON: Field lamp should blink and meter will indicate approximately the set point voltage indicated in the above table.

3. ADDITIONAL TEST: Remove red test lead from terminal marked "A". Field lamp should still blink , indicator light will turn on and the meter will indicate approximately 15.5V.

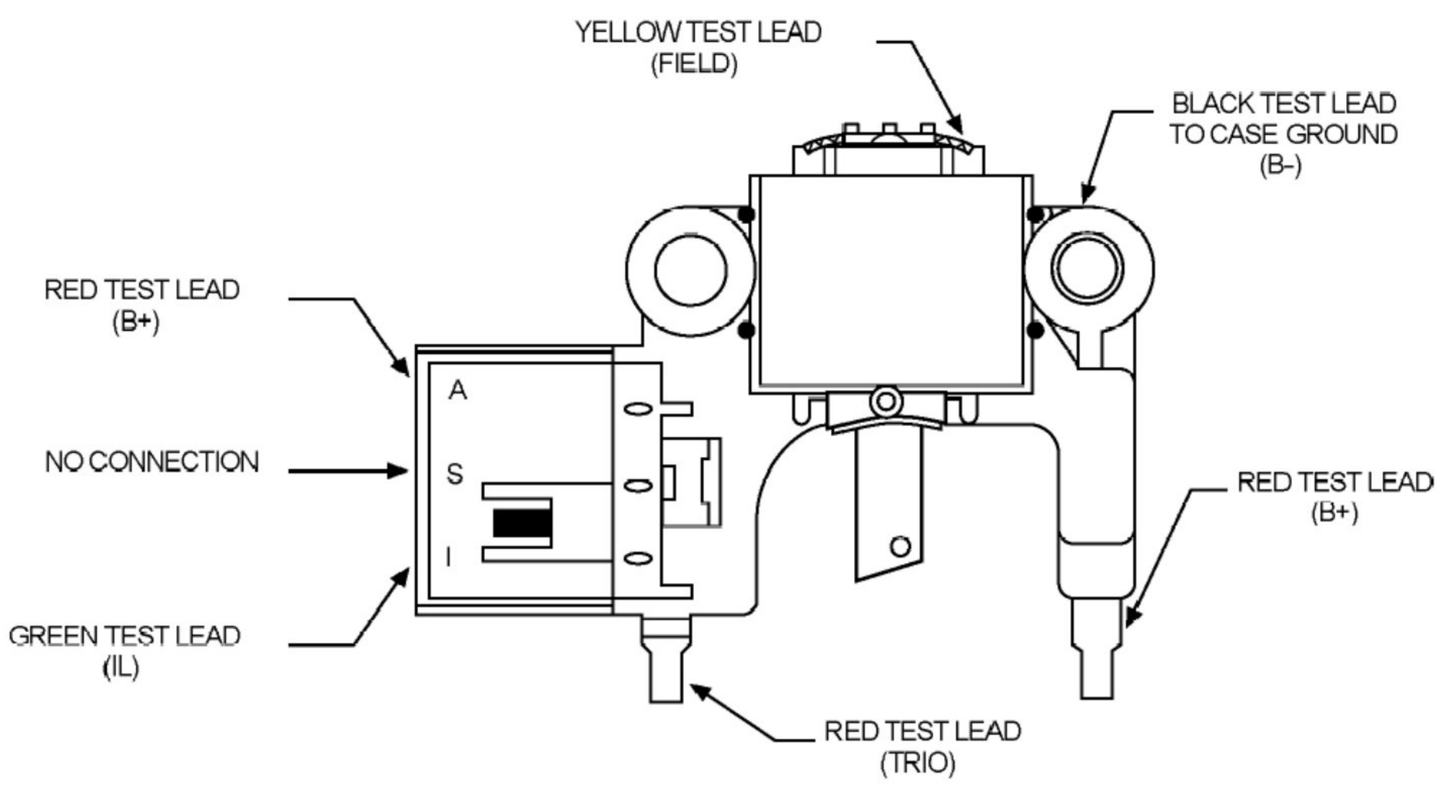

TRANSPO TESTER INSTRUCTIONS

for MITSUBISHI type regulators

PART NO.	FLD	VOLT	SET POINT	PART NO.	FLD	VOLT	SET POINT
IM274	**A**	**12**	**14.4**				

1. POWER OFF: Set "Voltage Range" and "FLD" switches to desired setting. Connect the voltage regulator as indicated in the diagram below.

2. POWER ON: Field lamp should blink and meter will indicate approximately the set point voltage indicated in the above table.

3. ADDITIONAL TEST: Remove red test lead from terminal marked "S". Field lamp should still blink and the meter will indicate approximately 15.5V.

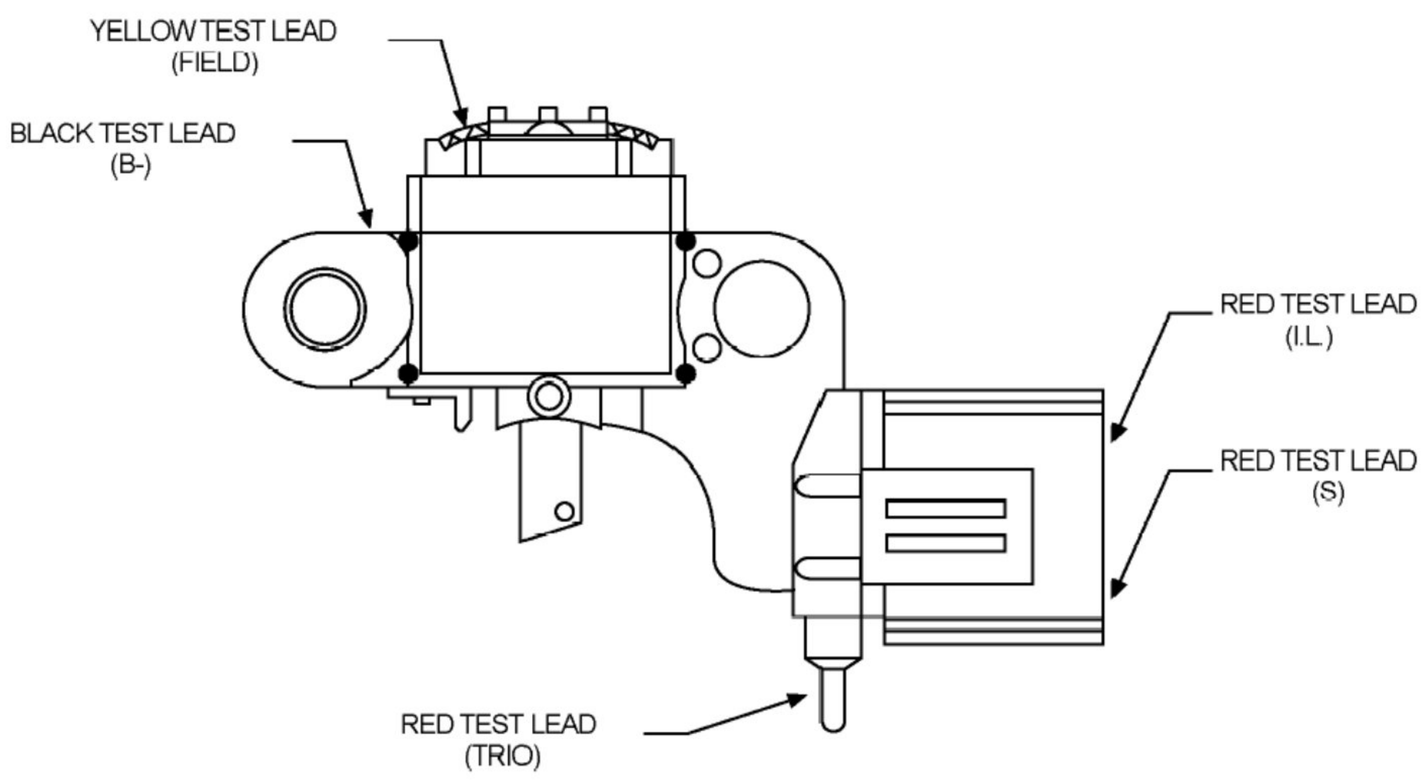

TRANSPO TESTER INSTRUCTIONS

for MITSUBISHI type regulators

PART NO.	FLD	VOLT	SET POINT	PART NO.	FLD	VOLT	SET POINT
IM277	**A**	**12**	**14.5**				
IM278	**A**	**12**	**14.5**				
IM279	**A**	**12**	**14.5**				

1. POWER OFF: Set "Voltage Range" and "FLD" switches to desired setting. Connect the voltage regulator as indicated in the diagram below.

2. POWER ON: Field lamp should blink and meter will indicate approximately the set point voltage indicated in the above table.

3. ADDITIONAL TEST: Remove red test lead from terminal marked "S". Field lamp should still blink and the meter will indicate approximately 15.5V. (on IM277 & IM279 indicator light will turn on.)

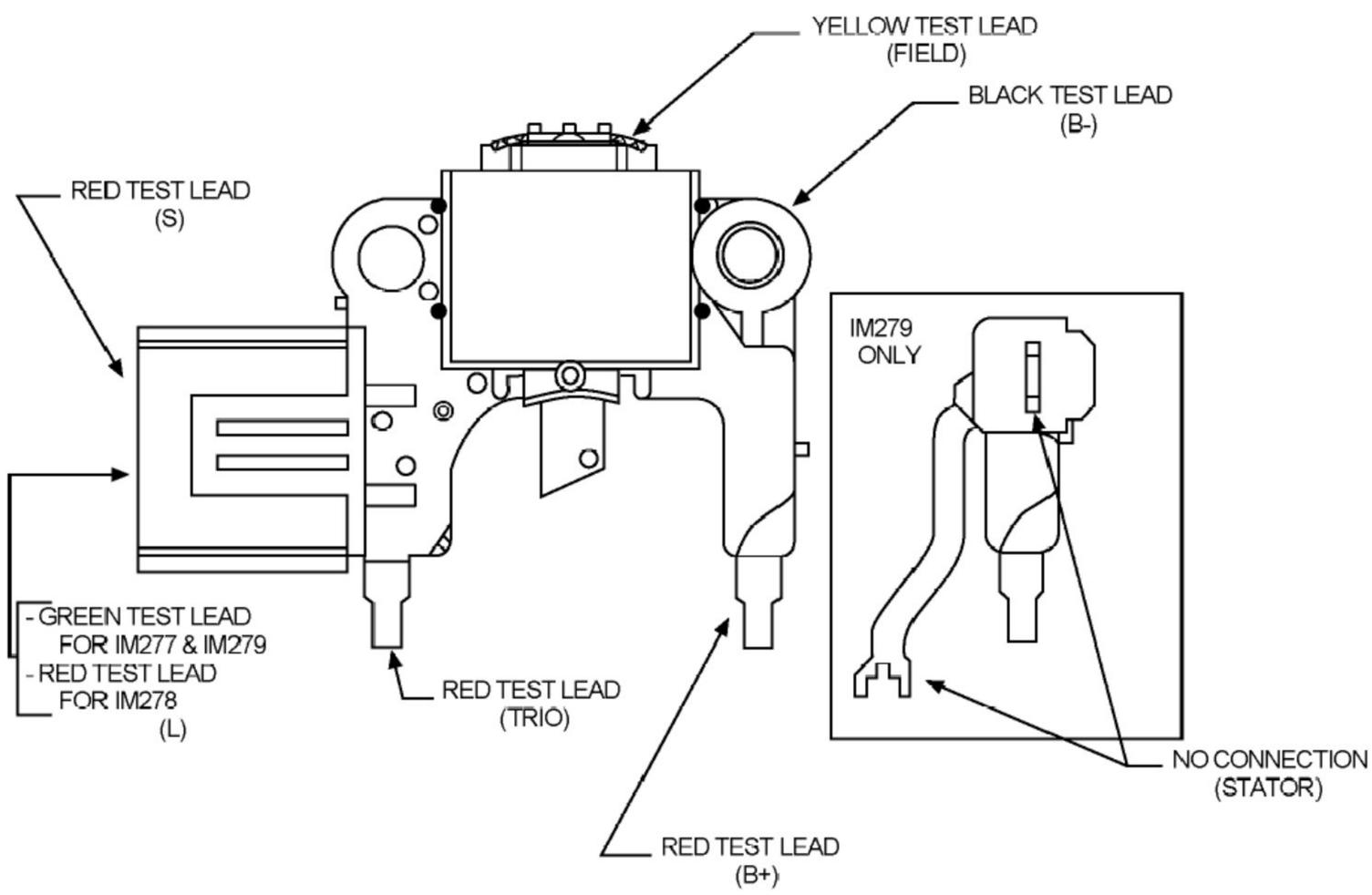

TRANSPO TESTER INSTRUCTIONS

for MITSUBISHI type regulators

PART NO.	FLD	VOLT	SET POINT	PART NO.	FLD	VOLT	SET POINT
IM226	**A**	**12**	**14.4**				

1. POWER OFF: Set "Voltage Range" and "FLD" switches to desired setting. Connect the voltage regulator as indicated in the diagram below.

2. POWER ON: Field lamp should blink and meter will indicate approximately the set point voltage indicated in the above table.

3. ADDITIONAL TEST:

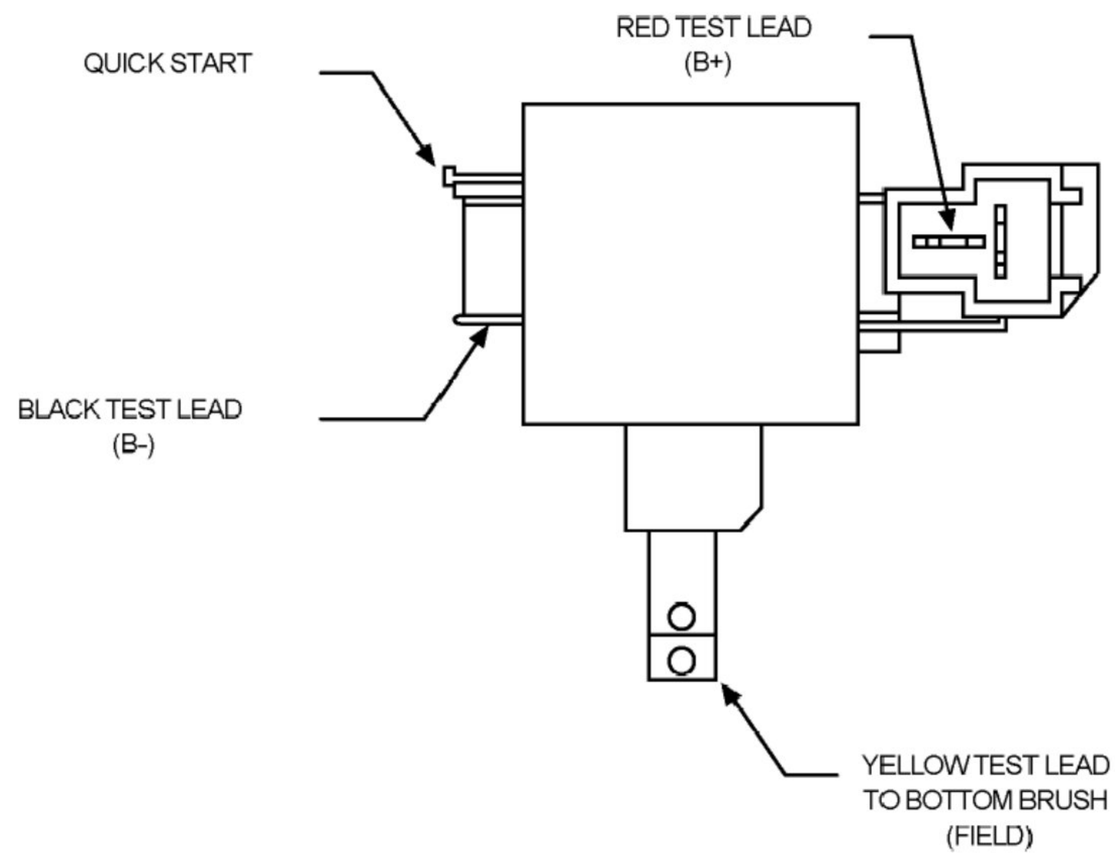

TRANSPO TESTER INSTRUCTIONS

for MITSUBISHI type regulators

PART NO.	FLD	VOLT	SET POINT	PART NO.	FLD	VOLT	SET POINT
IM215	**A**	**24**	**28.5**				

1. POWER OFF: Set "Voltage Range" and "FLD" switches to desired setting. Connect the voltage regulator as indicated in the diagram below.

2. POWER ON: Field lamp should blink and meter will indicate approximately the set point voltage indicated in the above table.

3. ADDITIONAL TEST:

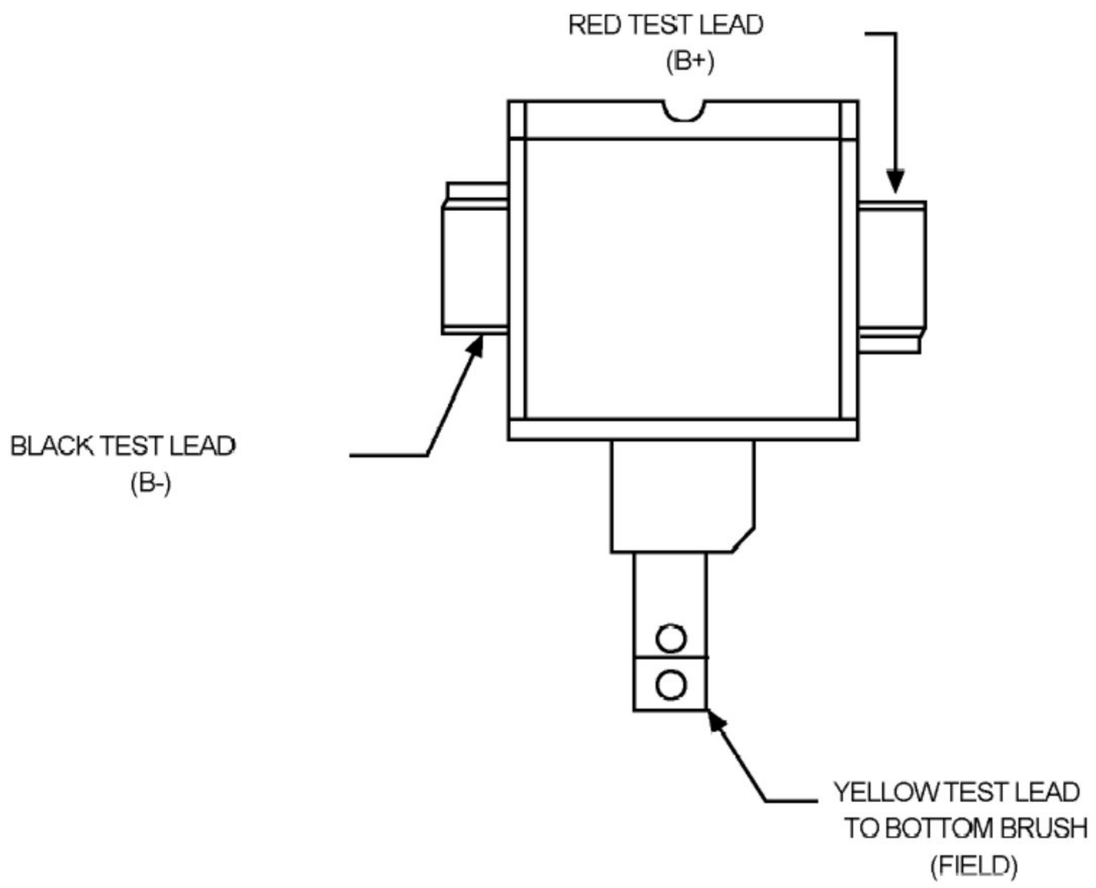

TRANSPO TESTER INSTRUCTIONS

for MITSUBISHI type regulators

PART NO.	FLD	VOLT	SET POINT	PART NO.	FLD	VOLT	SET POINT
IM227	**A**	**12**	**14.4**				

1. POWER OFF: Set "Voltage Range" and "FLD" switches to desired setting. Connect the voltage regulator as indicated in the diagram below.

2. POWER ON: Field lamp should blink and meter will indicate approximately the set point voltage indicated in the above table.

3. ADDITIONAL TEST:

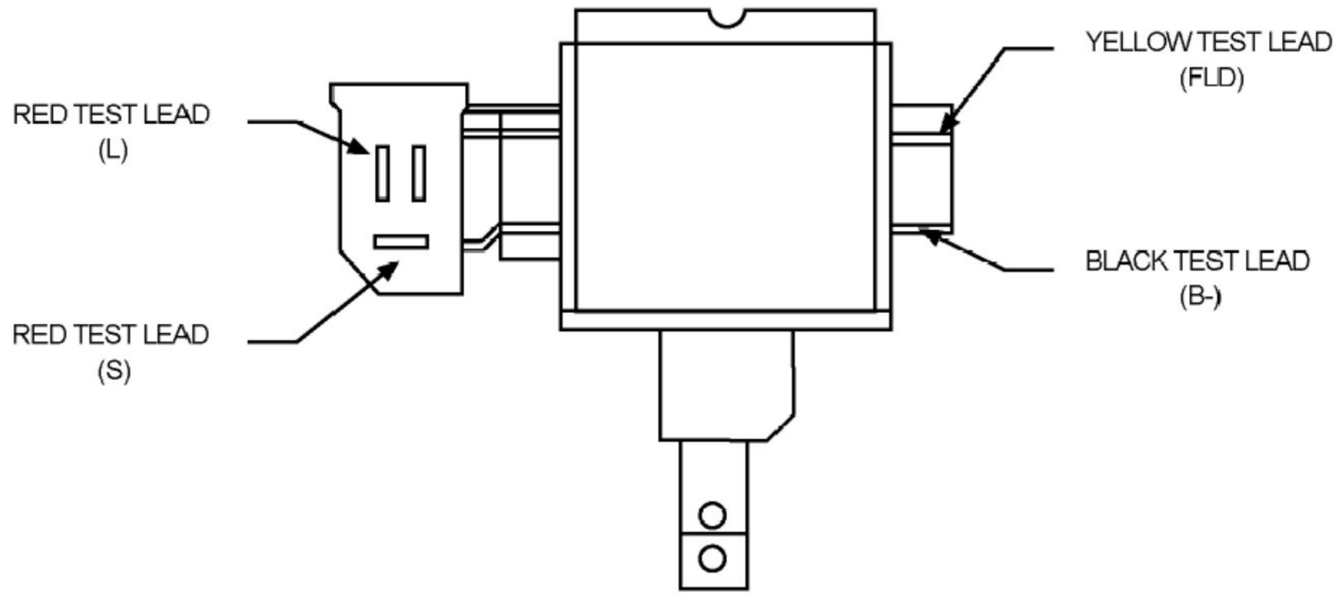

TRANSPO TESTER INSTRUCTIONS

for MITSUBISHI type regulators

PART NO.	FLD	VOLT	SET POINT	PART NO.	FLD	VOLT	SET POINT
IM207	**A**	**12**	**14.5**				
IM213	**A**	**24**	**28.4**				

1. POWER OFF: Set "Voltage Range" and "FLD" switches to desired setting. Connect the voltage regulator as indicated in the diagram below.

2. POWER ON: Field lamp should blink and meter will indicate approximately the set point voltage indicated in the above table.

3. ADDITIONAL TEST:

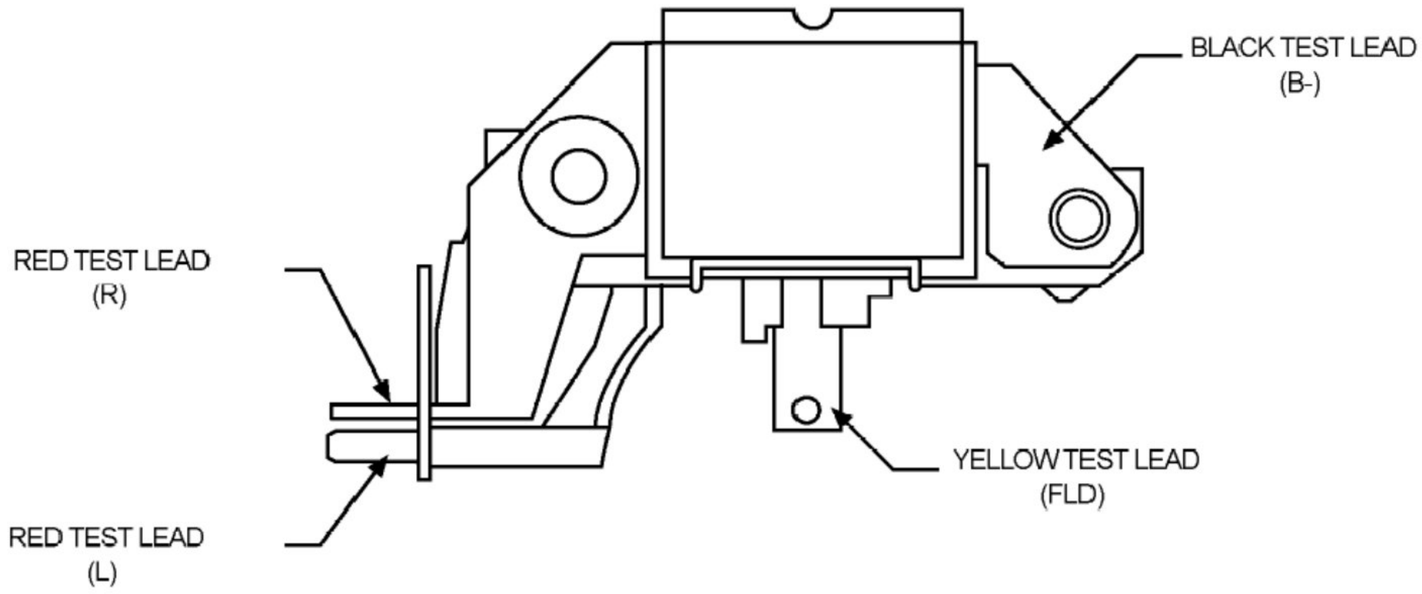

TRANSPO TESTER INSTRUCTIONS

for MITSUBISHI type regulators

PART NO.	FLD	VOLT	SET POINT	PART NO.	FLD	VOLT	SET POINT
IM212	**A**	**24**	**28.4**				
IM208	**A**	**12**	**14.5**				

1. POWER OFF: Set "Voltage Range" and "FLD" switches to desired setting. Connect the voltage regulator as indicated in the diagram below.

2. POWER ON: Field lamp should blink and meter will indicate approximately the set point voltage indicated in the above table.

3. ADDITIONAL TEST:

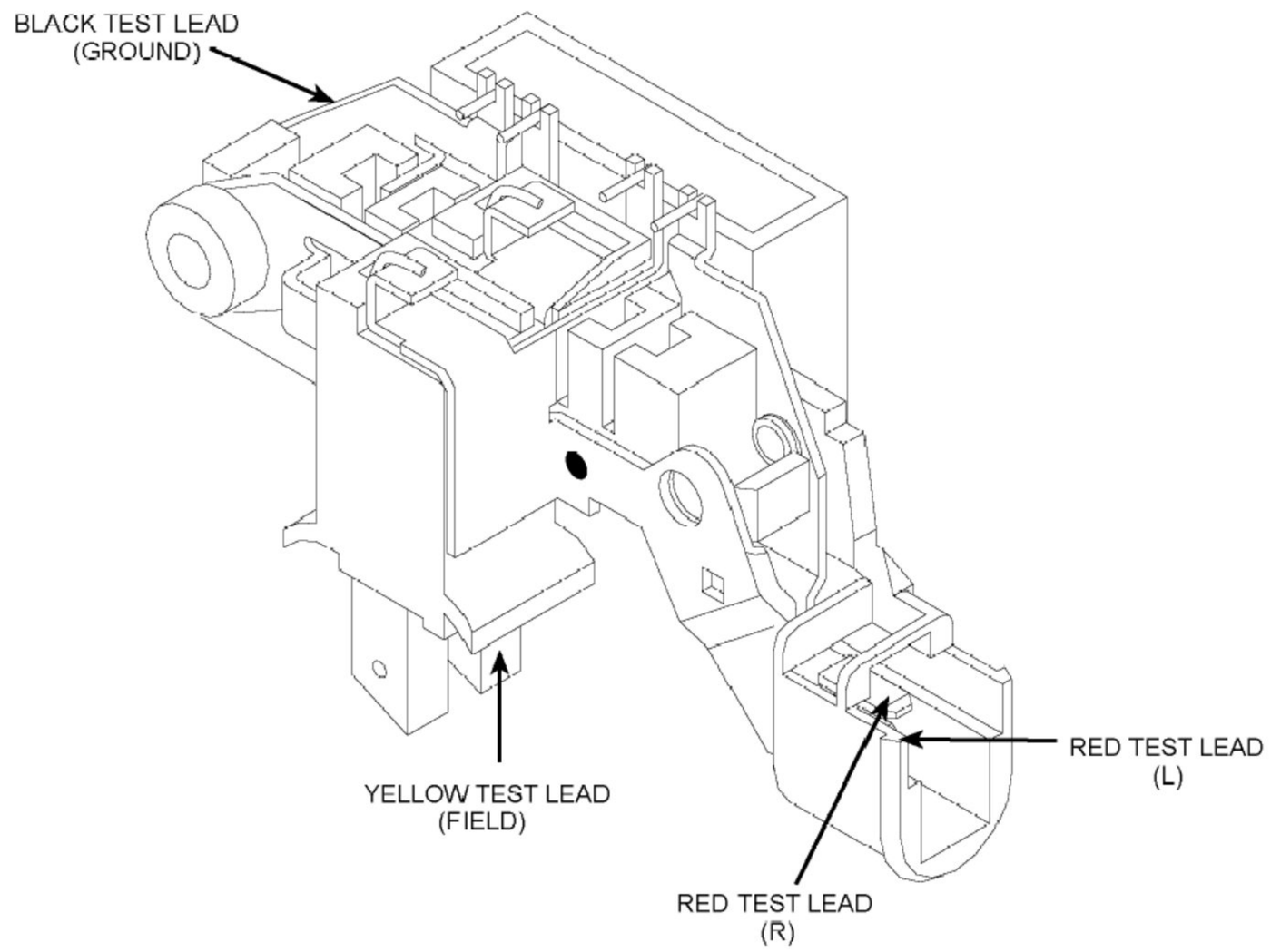

TRANSPO TESTER INSTRUCTIONS

for MITSUBISHI type regulators

PART NO.	FLD	VOLT	SET POINT	PART NO.	FLD	VOLT	SET POINT
IM214	**A**	**24**	**28.7**				

1. POWER OFF: Set "Voltage Range" and "FLD" switches to desired setting. Connect the voltage regulator as indicated in the diagram below.

2. POWER ON: Field lamp should blink and meter will indicate approximately the set point voltage indicated in the above table.

3. ADDITIONAL TEST:

TRANSPO TESTER INSTRUCTIONS

for MITSUBISHI type regulators

PART NO.	FLD	VOLT	SET POINT	PART NO.	FLD	VOLT	SET POINT
IM206	**A**	**12**	**14.4**				

1. POWER OFF: Set "Voltage Range" and "FLD" switches to desired setting. Connect the voltage regulator as indicated in the diagram below.

2. POWER ON: Field lamp should blink and meter will indicate approximately the set point voltage indicated in the above table.

3. ADDITIONAL TEST:

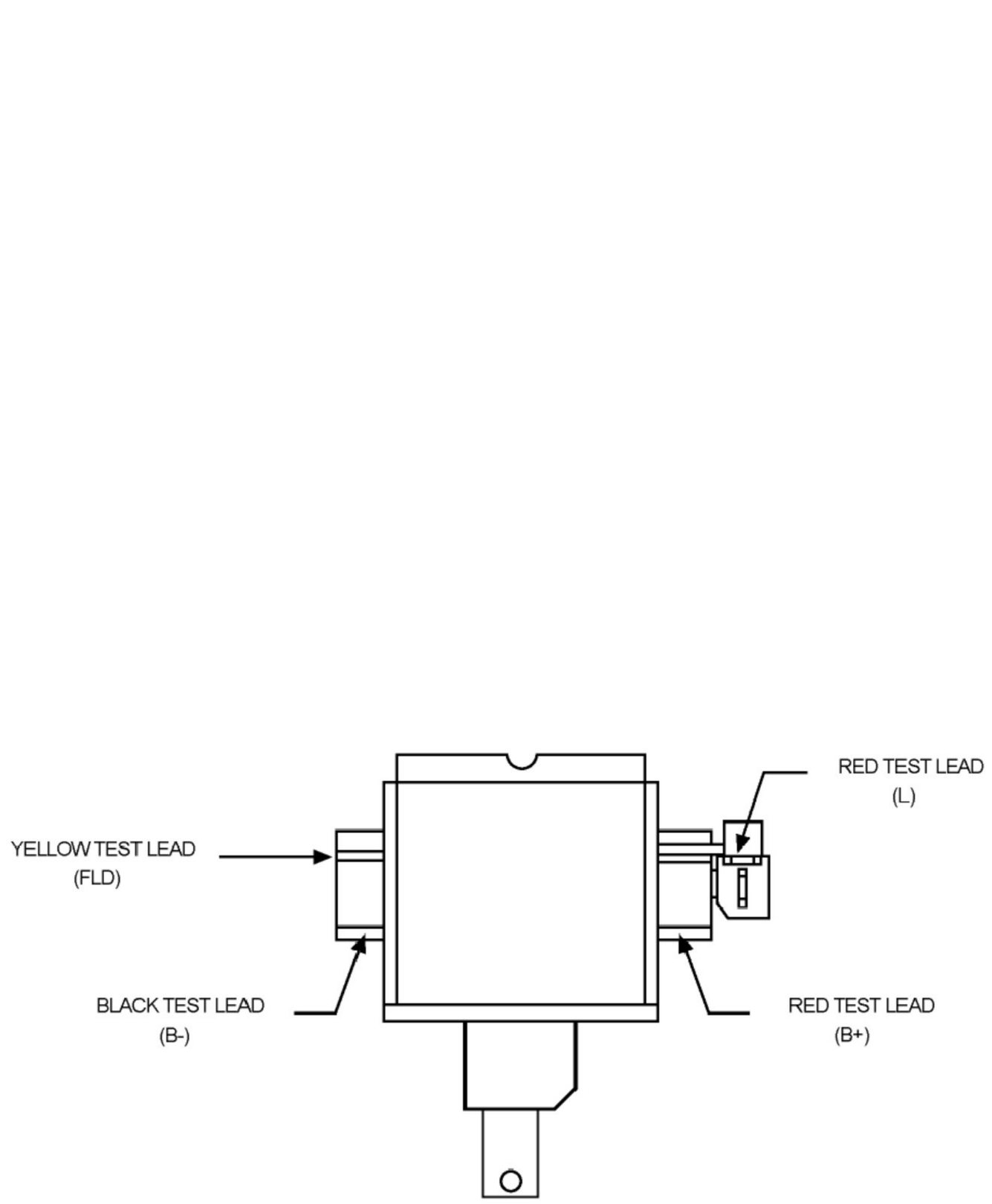

TRANSPO TESTER INSTRUCTIONS

for MITSUBISHI type regulators

PART NO.	FLD	VOLT	SET POINT	PART NO.	FLD	VOLT	SET POINT
IM273	**A**	**12**	**14.4**				
IM839	**A**	**12**	**14.4**				
IM835	**A**	**12**	**14.4**				

1. POWER OFF: Set "Voltage Range" and "FLD" switches to desired setting. Connect the voltage regulator as indicated in the diagram below.

2. POWER ON: Field lamp should blink and meter will indicate approximately the set point voltage indicated in the above table.

3. ADDITIONAL TEST: Remove red test lead from terminal marked "TRIO". field lamp should still blink indicator light will turn on and meter will indicate the set point voltage.

Reconnect red test lead to terminal marked "Trio". Connect black test lead to "C" terminal. Field lamp should still blink and meter will indicate approximately 12.5V.
Using VRC1000: Push the choke drive switch and the "Choke Drive Indicator Lamp" will turn on between 16.0V and 17.1V.

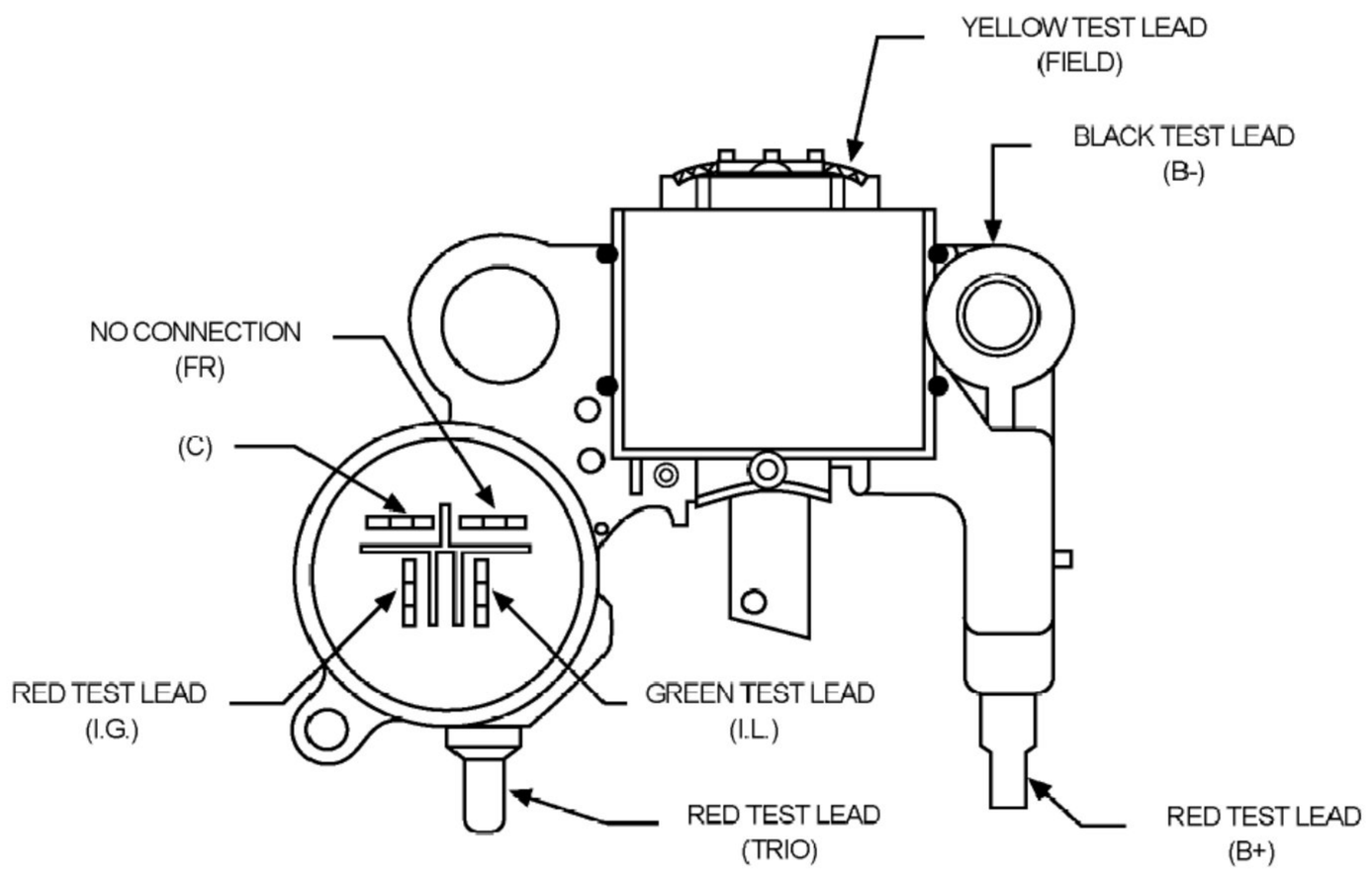

TRANSPO TESTER INSTRUCTIONS

for MITSUBISHI type regulators

PART NO.	FLD	VOLT	SET POINT	PART NO.	FLD	VOLT	SET POINT
IM282	**A**	**12**	**14.4**				
IM281	**A**	**12**	**14.5**				

1. POWER OFF: Set "Voltage Range" and "FLD" switches to desired setting. Connect the voltage regulator as indicated in the diagram below.

2. POWER ON: Field lamp should blink and meter will indicate approximately the set point voltage indicated in the above table.

3. ADDITIONAL TEST: Remove red test lead from terminal marked "S". field lamp should still blink and the meter will indicated approximately 15.5V.

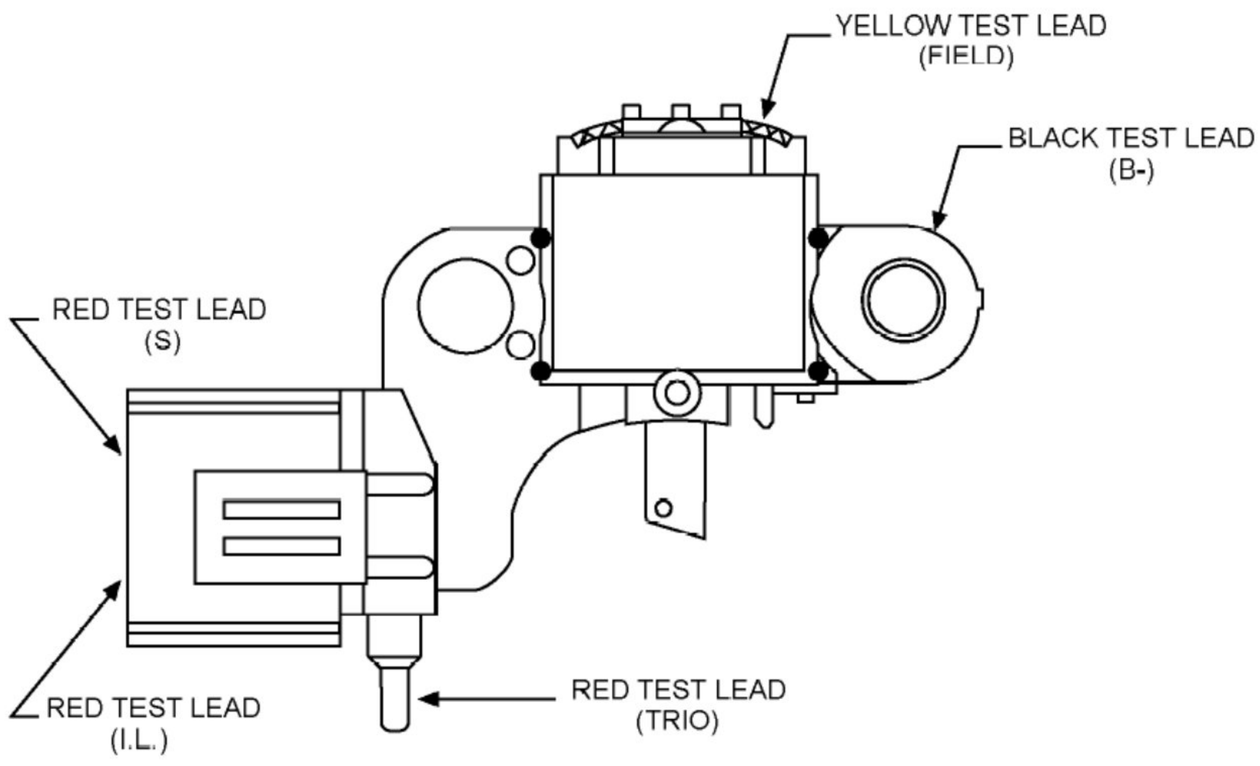

TRANSPO TESTER INSTRUCTIONS

for MITSUBISHI type regulators

PART NO.	FLD	VOLT	SET POINT	PART NO.	FLD	VOLT	SET POINT
IM280	**A**	**12**	**14.4**				
IM837	**A**	**12**	**14.4**				

1. POWER OFF: Set "Voltage Range" and "FLD" switches to desired setting. Connect the voltage regulator as indicated in the diagram below.

2. POWER ON: Field lamp should blink and meter will indicate approximately the set point voltage indicated in the above table.

3. ADDITIONAL TEST: Remove red test lead from terminal marked "S" Indicator lamp should turn on, will still blink, and the meter will indicate approximately 15.5V.
Using VRC1000: Push the choke drive switch and the "Choke Drive Indicator Lamp" will turn on between 16.0V and 17.1V.

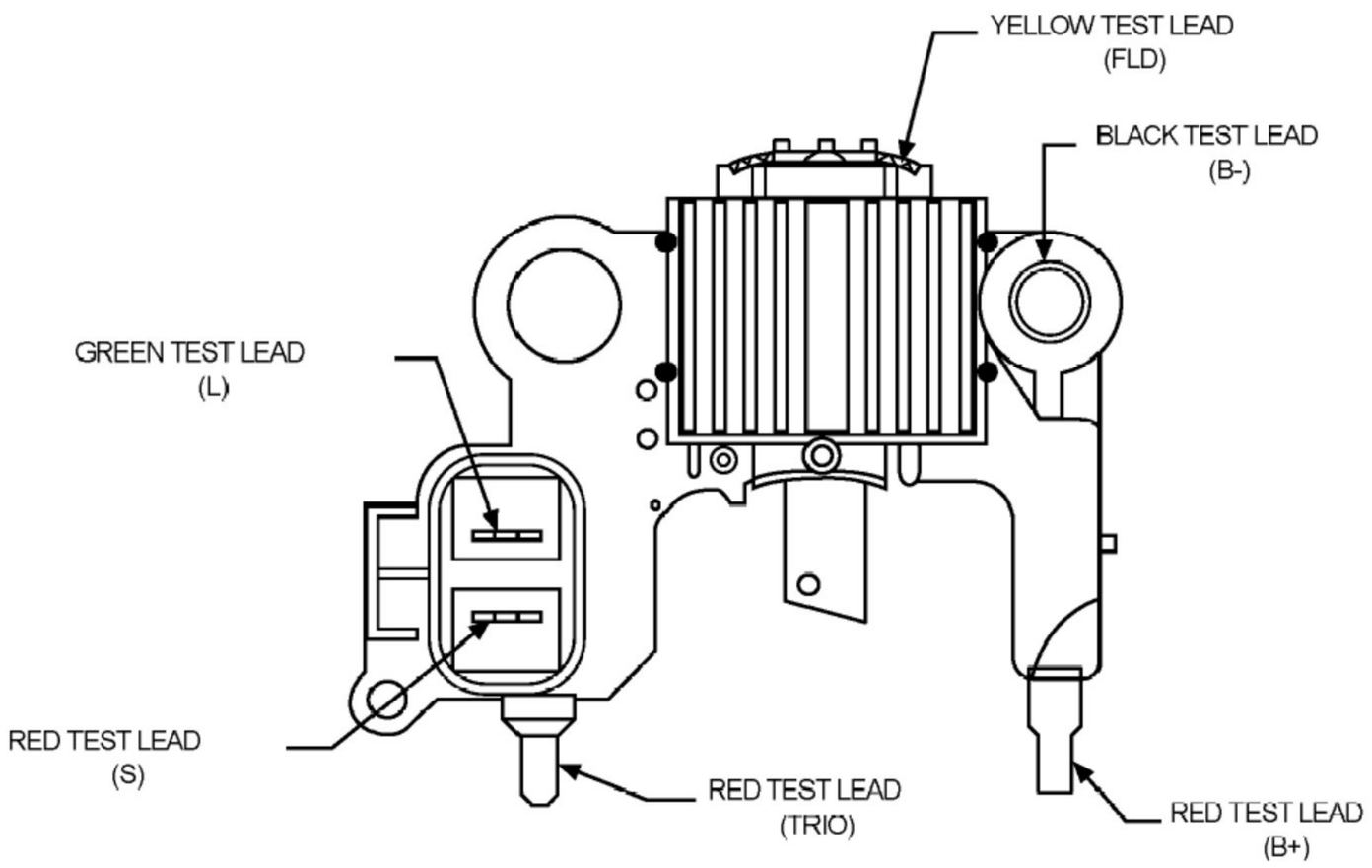

TRANSPO TESTER INSTRUCTIONS

for MITSUBISHI type regulators

PART NO.	FLD	VOLT	SET POINT	PART NO.	FLD	VOLT	SET POINT
IM284	**A**	**12**	**14.4**				

1. POWER OFF: Set "Voltage Range" and "FLD" switches to desired setting. Connect the voltage regulator as indicated in the diagram below.

2. POWER ON: Field lamp should blink and meter will indicate approximately the set point voltage indicated in the above table.

3. ADDITIONAL TEST: Remove red test lead from terminal marked "S". Field lamp will still blink, and the meter will indicate approximately 15.5V.

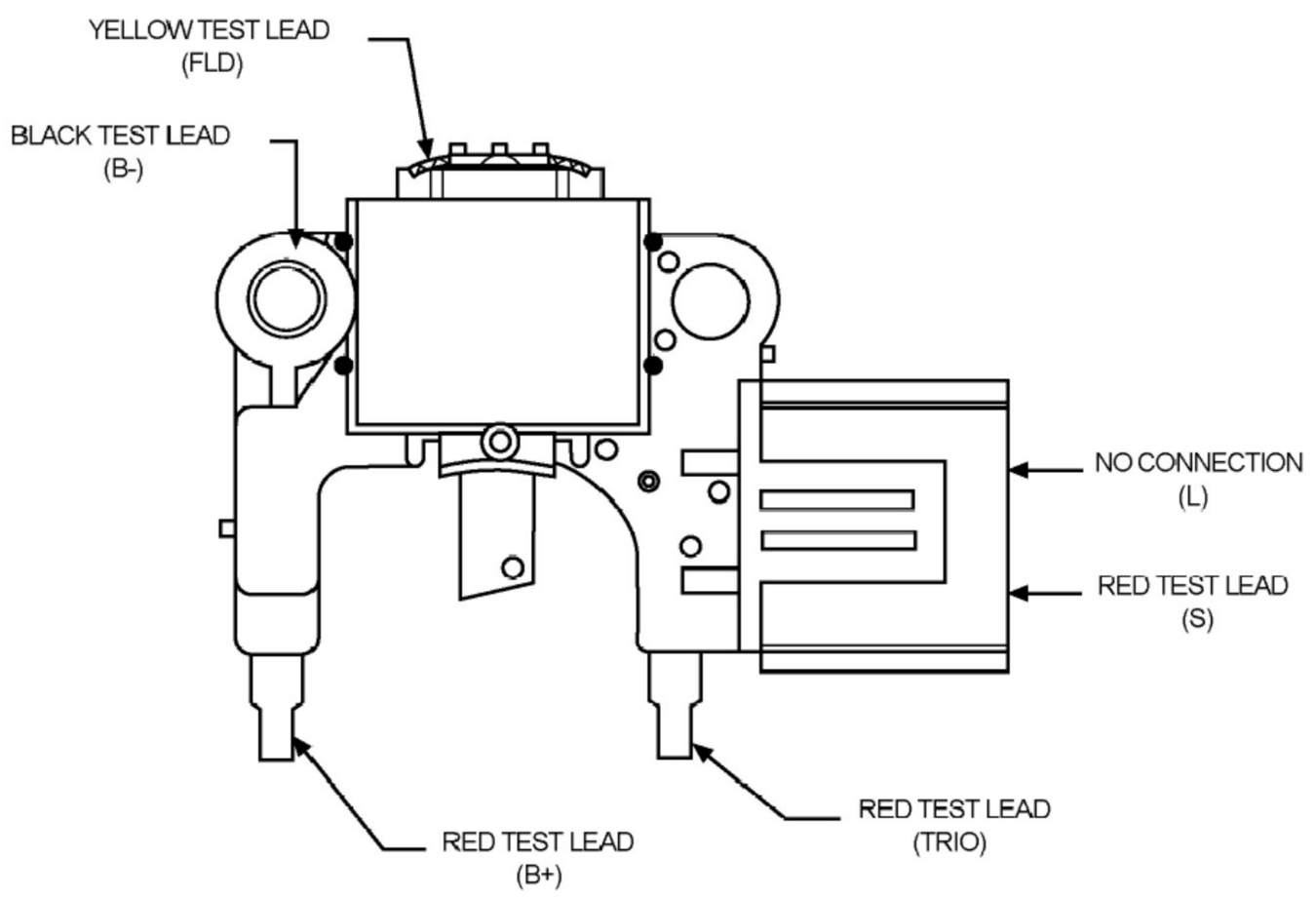

TRANSPO TESTER INSTRUCTIONS

for MITSUBISHI type regulators

PART NO.	FLD	VOLT	SET POINT	PART NO.	FLD	VOLT	SET POINT
IM209	**A**	**12**	**14.5**				

1. POWER OFF: Set "Voltage Range" and "FLD" switches to desired setting. Connect the voltage regulator as indicated in the diagram below.

2. POWER ON: Field lamp should blink and meter will indicate approximately the set point voltage indicated in the above table.

3. ADDITIONAL TEST: Remove red test lead from terminal marked "S" field lamp will still blink, and the meter will indicate approximately 15.5V.

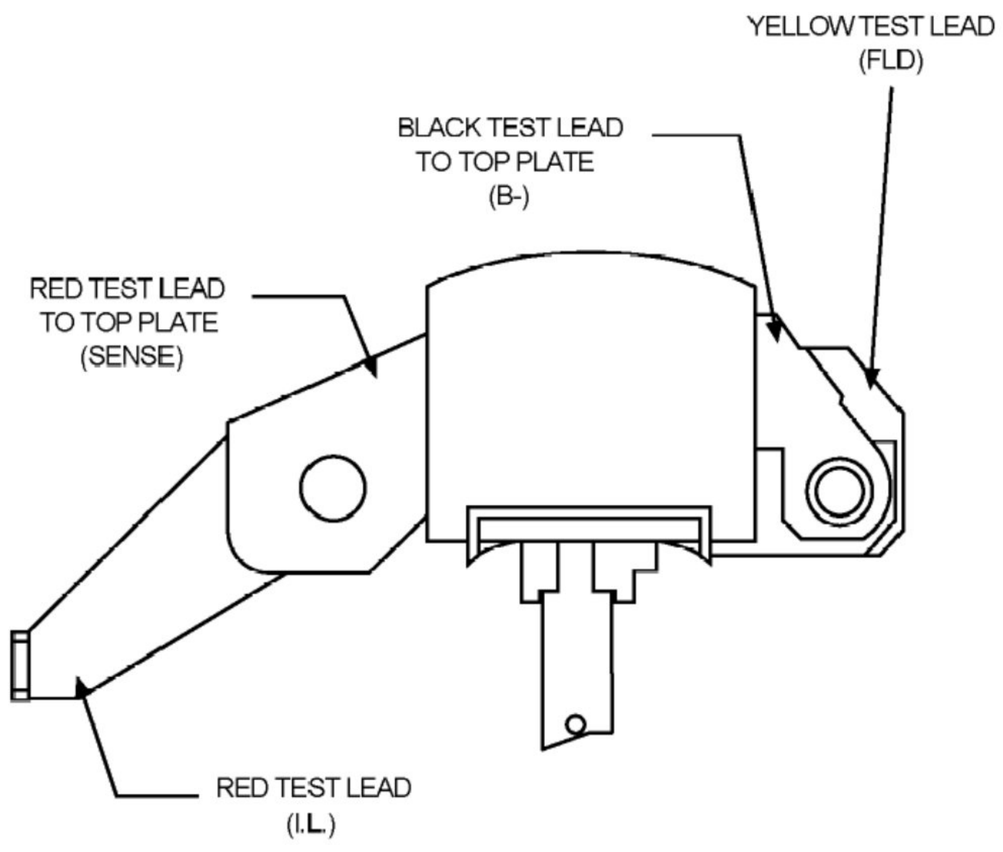

TRANSPO TESTER INSTRUCTIONS

for MITSUBISHI type regulators

PART NO.	FLD	VOLT	SET POINT	PART NO.	FLD	VOLT	SET POINT
IM210	**A**	**12**	**14.5**				

1. POWER OFF: Set "Voltage Range" and "FLD" switches to desired setting. Connect the voltage regulator as indicated in the diagram below.

2. POWER ON: Field lamp should blink and meter will indicate approximately the set point voltage indicated in the above table.

3. ADDITIONAL TEST: Remove red test lead from terminal marked "S". Field lamp will still blink, and the meter will indicate approximately 15.5V.



TRANSPO TESTER INSTRUCTIONS

for MITSUBISHI type regulators

PART NO.	FLD	VOLT	SET POINT	PART NO.	FLD	VOLT	SET POINT
IM276	**A**	**12**	**14.4**				

1. POWER OFF: Set "Voltage Range" and "FLD" switches to desired setting. Connect the voltage regulator as indicated in the diagram below.

2. POWER ON: Field lamp should blink and meter will indicate approximately the set point voltage indicated in the above table.

3. ADDITIONAL TEST: Remove red test lead from terminal marked "S". Indicator light will turn on, Field lamp will still blink, and the meter will indicate approximately 15.5V.

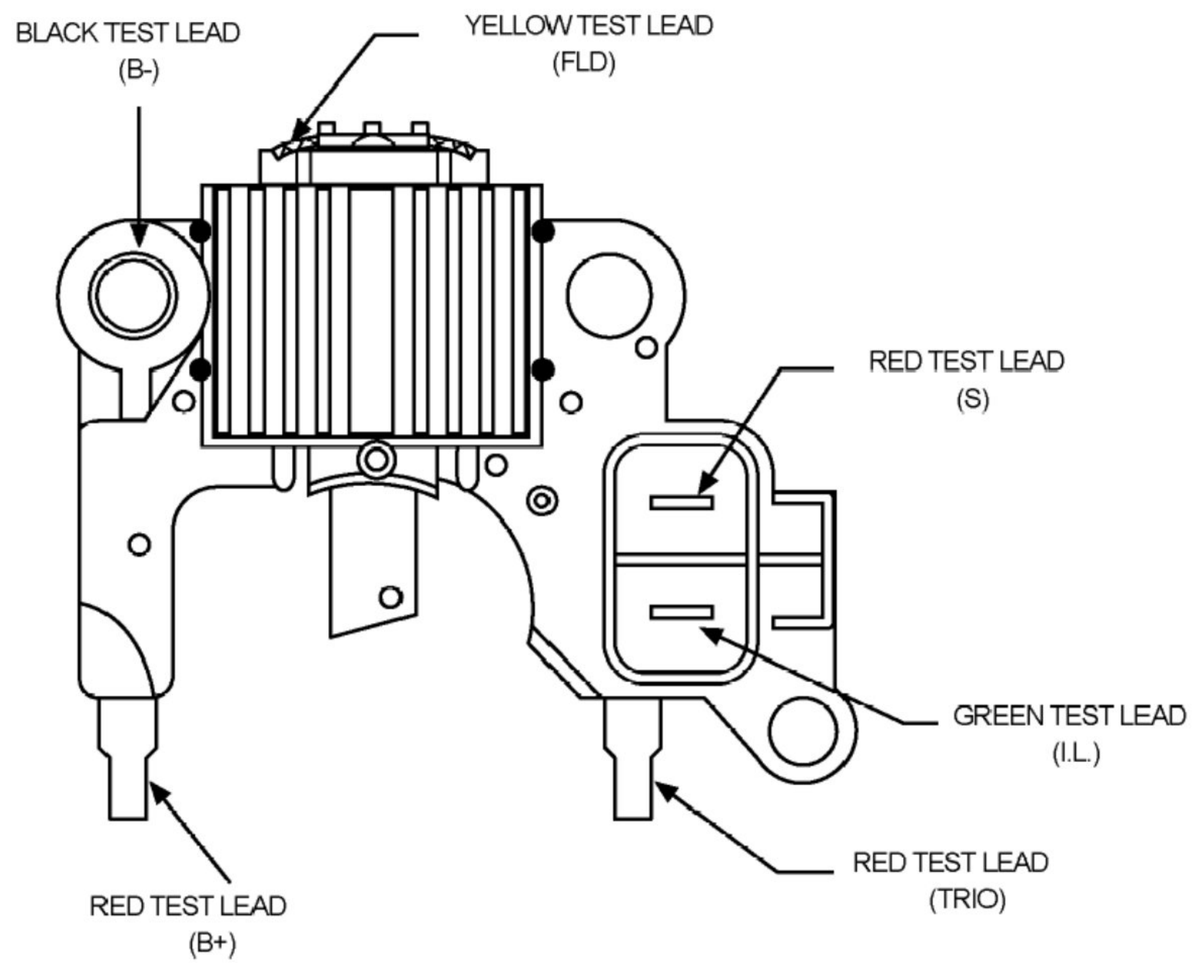

TRANSPO TESTER INSTRUCTIONS

for MITSUBISHI type regulators

PART NO.	FLD	VOLT	SET POINT	PART NO.	FLD	VOLT	SET POINT
IM287	**A**	**12**	**14.5**				

1. POWER OFF: Set "Voltage Range" and "FLD" switches to desired setting. Connect the voltage regulator as indicated in the diagram below.

2. POWER ON: Field lamp should blink and meter will indicate approximately the set point voltage indicated in the above table.

3. ADDITIONAL TEST: Remove red test lead from terminal marked "S". The meter will indicate approximately 15.5V.

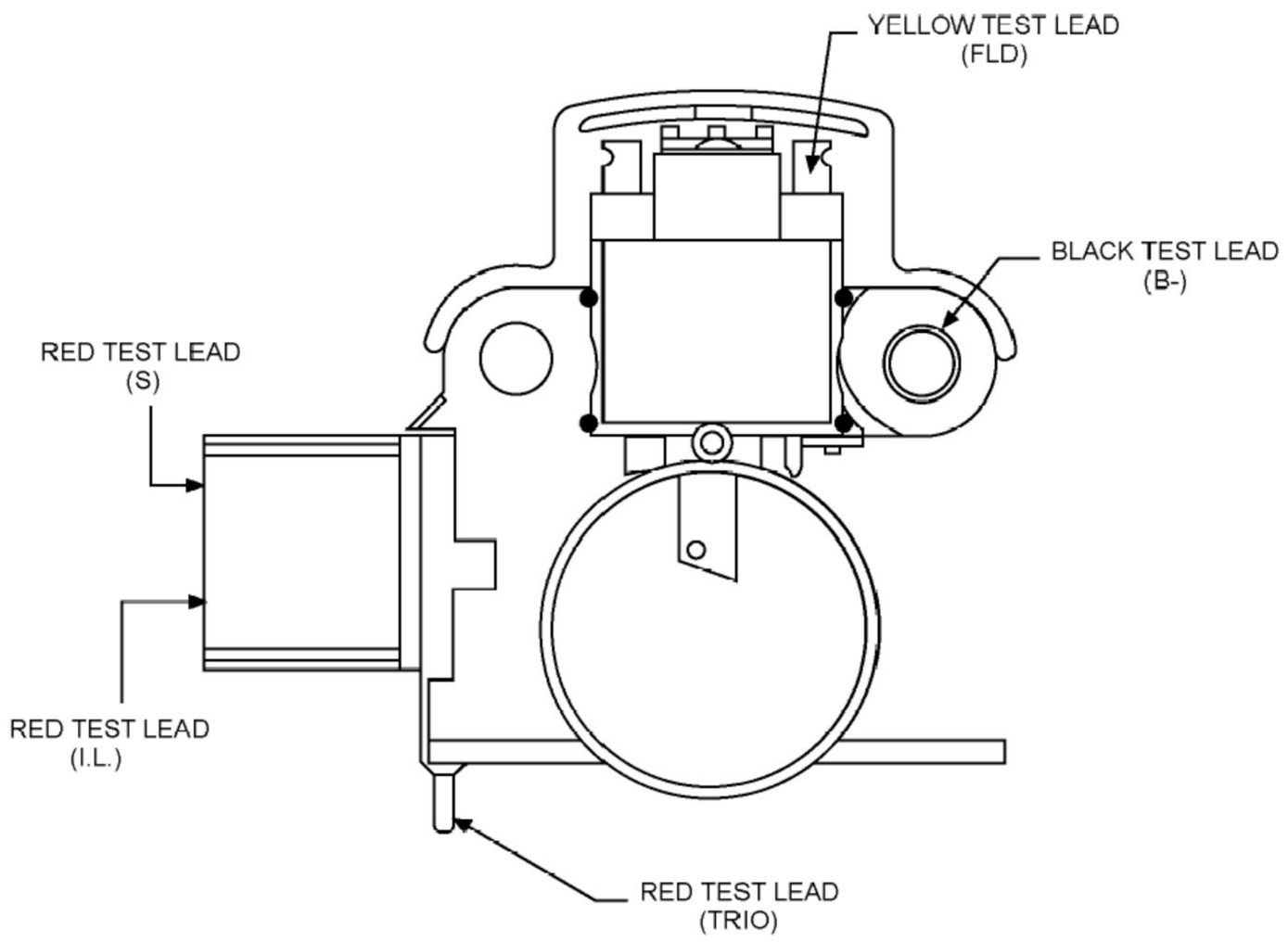

TRANSPO TESTER INSTRUCTIONS

for MITSUBISHI type regulators

PART NO.	FLD	VOLT	SET POINT	PART NO.	FLD	VOLT	SET POINT
IM283	**A**	**12**	**14.5**				

1. POWER OFF: Set "Voltage Range" and "FLD" switches to desired setting. Connect the voltage regulator as indicated in the diagram below.

2. POWER ON: Field lamp should blink and meter will indicate approximately the set point voltage indicated in the above table.

3. ADDITIONAL TEST:

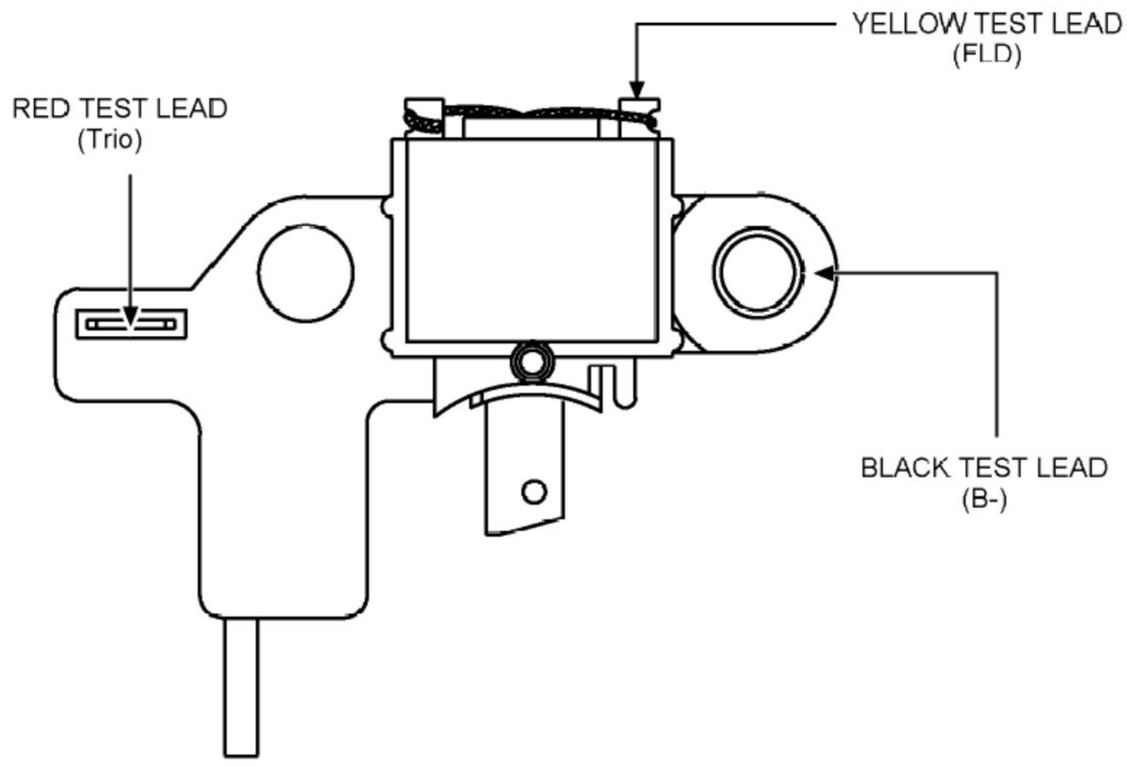

TRANSPO TESTER INSTRUCTIONS

for MITSUBISHI type regulators

PART NO.	FLD	VOLT	SET POINT	PART NO.	FLD	VOLT	SET POINT
IM829	**A**	**12**	**14.5**				

1. POWER OFF: Set "Voltage Range" and "FLD" switches to desired setting. Connect the voltage regulator as indicated in the diagram below.

2. POWER ON: Field lamp should blink and meter will indicate approximately the set point voltage indicated in the above table.

3. ADDITIONAL TEST: Remove red test lead from terminal marked "S". Indicator lamp should turn on, field lamp will still blink, and the meter will indicate approximately 15.5V.

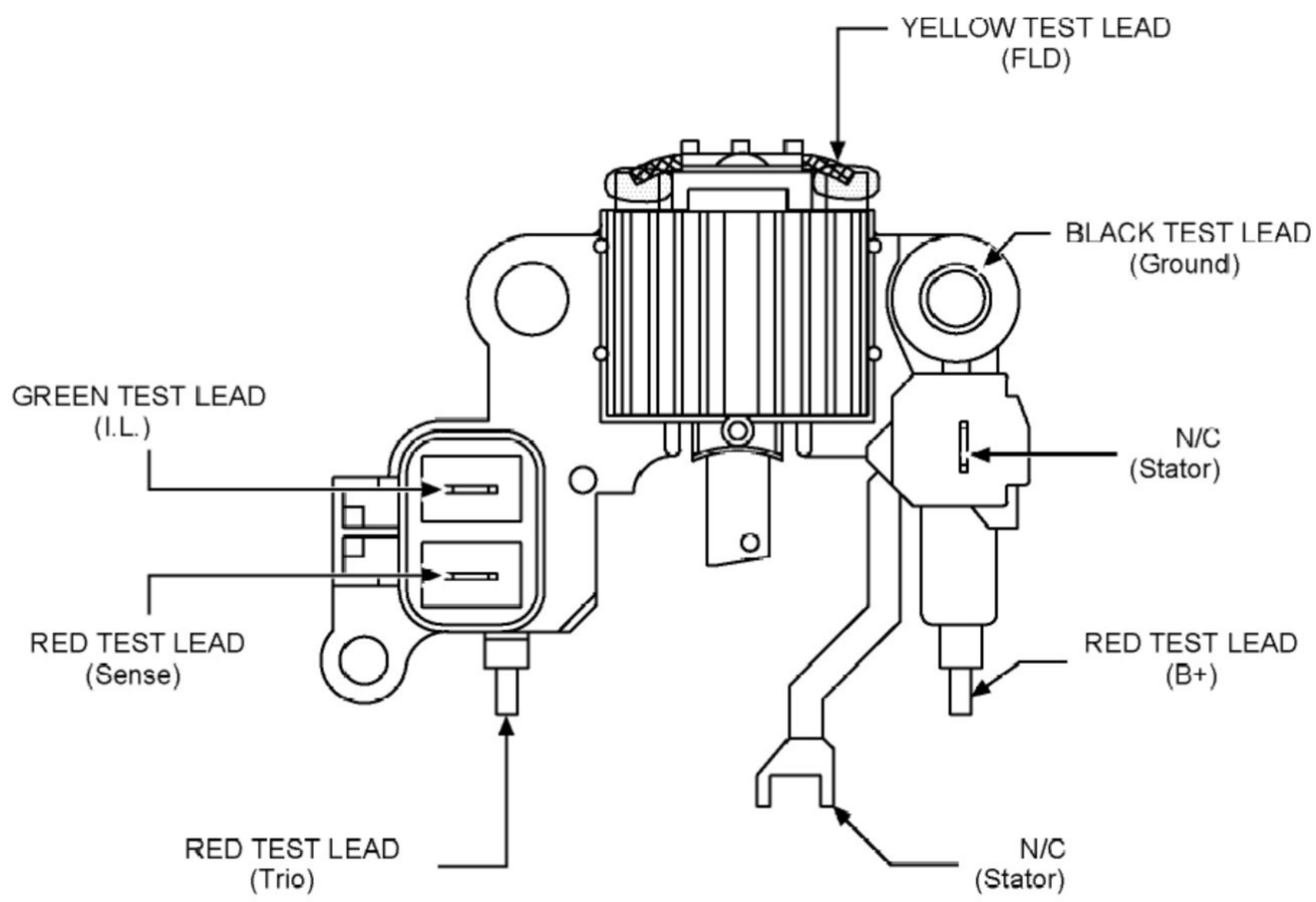

TRANSPO TESTER INSTRUCTIONS

for MITSUBISHI type regulators

PART NO.	FLD	VOLT	SET POINT	PART NO.	FLD	VOLT	SET POINT
IM830	**A**	**12**	**14.5**				

1. POWER OFF: Set "Voltage Range" and "FLD" switches to desired setting. Connect the voltage regulator as indicated in the diagram below.

2. POWER ON: Field lamp should blink and meter will indicate approximately the set point voltage indicated in the above table.

3. ADDITIONAL TEST: Remove red test lead from terminal marked "S". Indicator lamp should turn on, field lamp will still blink, and the meter will indicate approximately 15.5V. and the lamp will turn on.

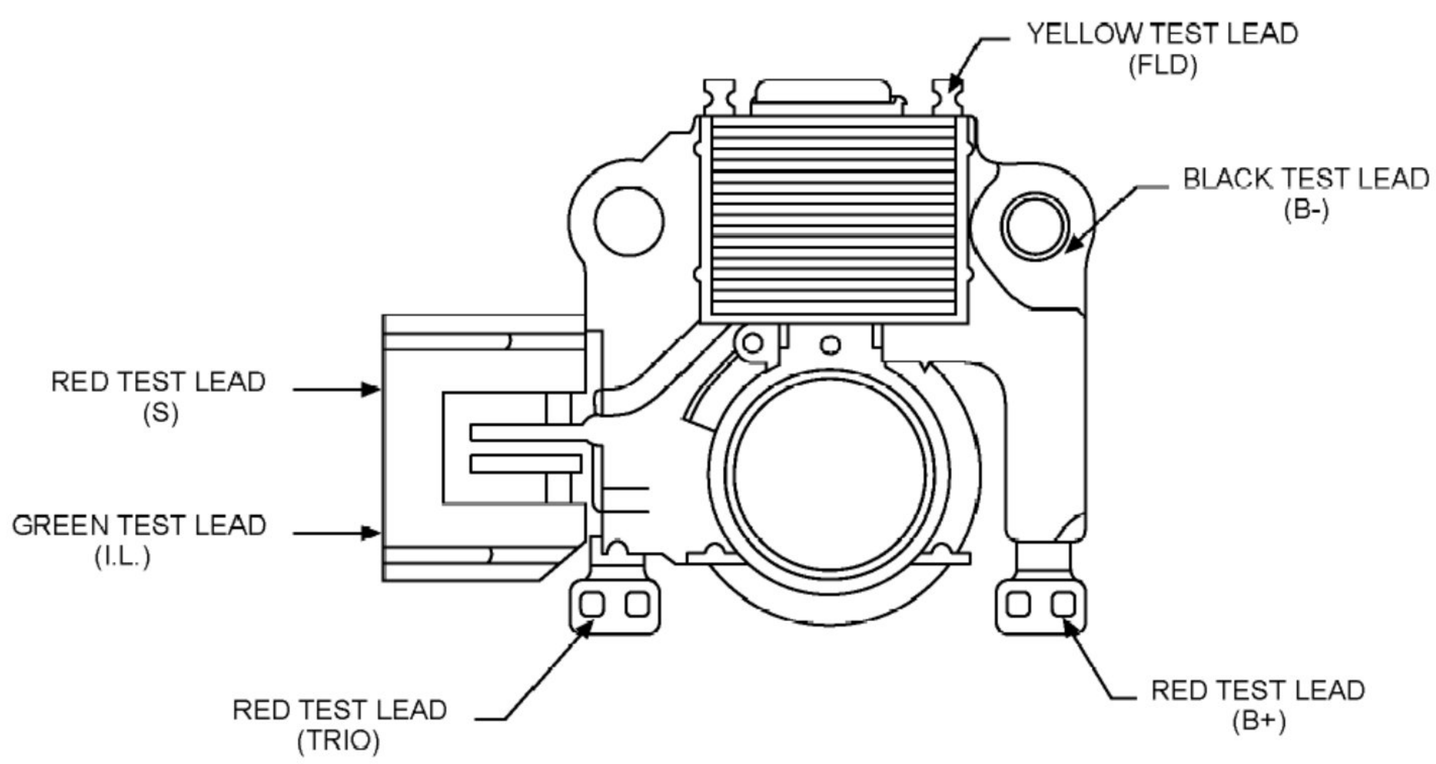

TRANSPO TESTER INSTRUCTIONS

for MITSUBISHI type regulators

PART NO.	FLD	VOLT	SET POINT	PART NO.	FLD	VOLT	SET POINT
IM285	**A**	**12**	**14.5**				

1. POWER OFF: Set "Voltage Range" and "FLD" switches to desired setting. Connect the voltage regulator as indicated in the diagram below.

2. POWER ON: Field lamp should blink and meter will indicate approximately the set point voltage indicated in the above table.

3. ADDITIONAL TEST: Remove red test lead from terminal marked "S". Field lamp should still blink and the meter will indicate approximately 15.5 volts.

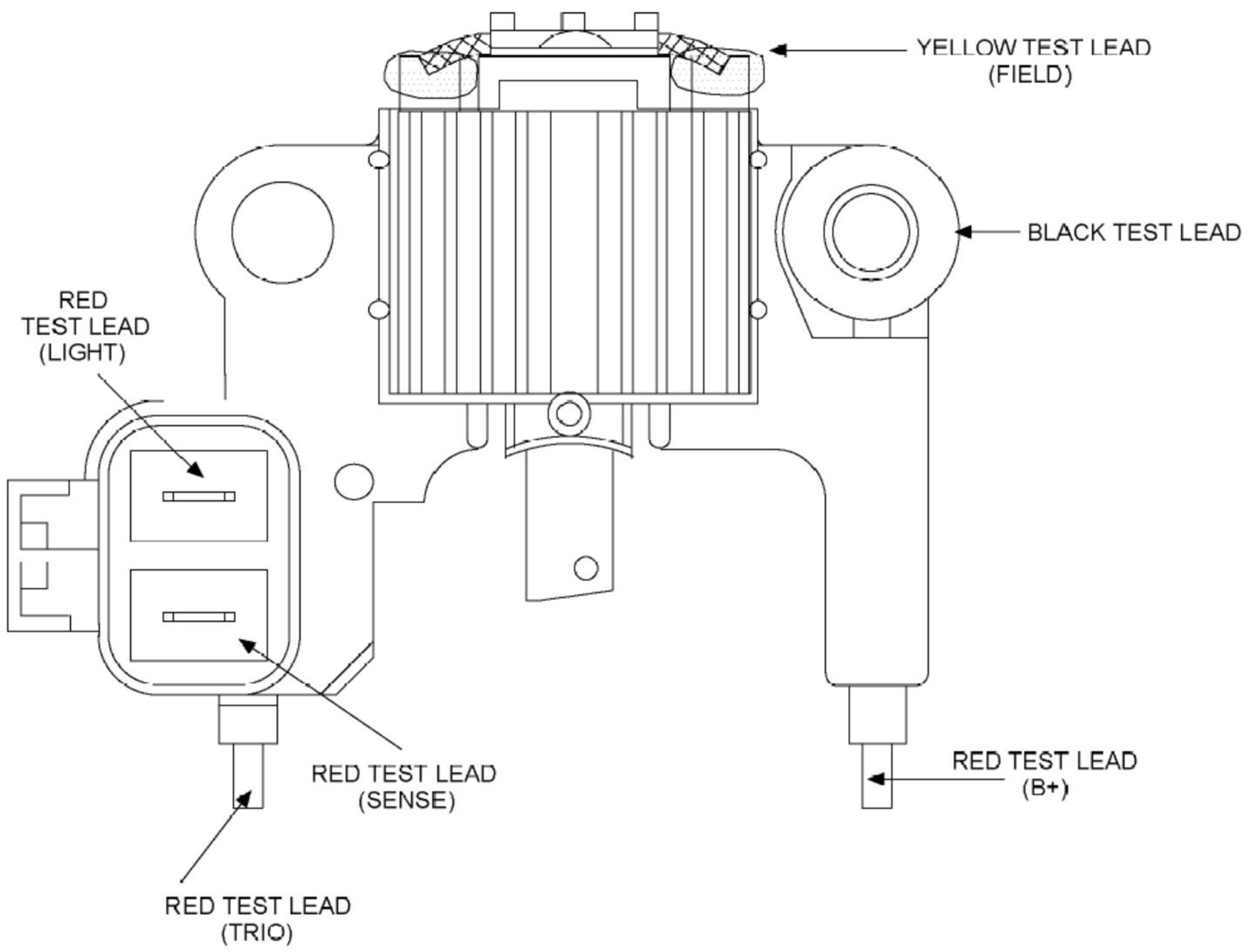

TRANSPO TESTER INSTRUCTIONS

for MITSUBISHI type regulators

PART NO.	FLD	VOLT	SET POINT	PART NO.	FLD	VOLT	SET POINT
IM288	**A**	**12**	**14.6**				

1. POWER OFF: Set "Voltage Range" and "FLD" switches to desired setting. Connect the voltage regulator as indicated in the diagram below.

2. POWER ON: Field lamp should blink and meter will indicate approximately the set point voltage indicated in the above table.

3. ADDITIONAL TEST: Remove red test lead from terminal marked "S". Field lamp should still blink and the meter will indicate approximately 15.5V.

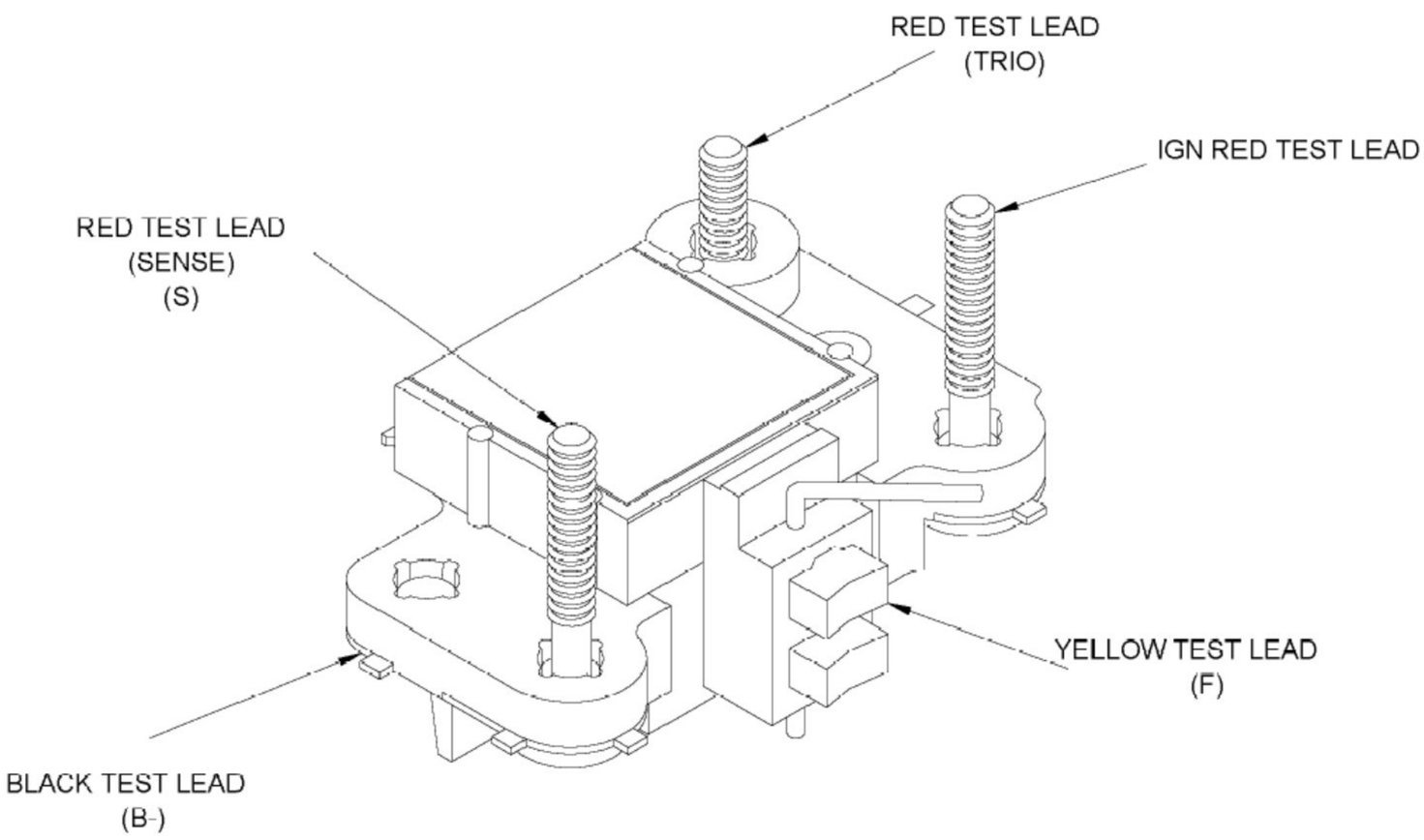

TRANSPO TESTER INSTRUCTIONS

for MITSUBISHI type regulators

PART NO.	FLD	VOLT	SET POINT	PART NO.	FLD	VOLT	SET POINT
IM291	**A**	**12**	**14.5**				

1. POWER OFF: Set "Voltage Range" and "FLD" switches to desired setting. Connect the voltage regulator as indicated in the diagram below.

2. POWER ON: Field lamp should blink and meter will indicate approximately the set point voltage indicated in the above table.

3. ADDITIONAL TEST: Remove red test lead from terminal marked "S" Indicator lamp should turn on, field lamp will still blink, and the meter will indicate approximately 15.5V.

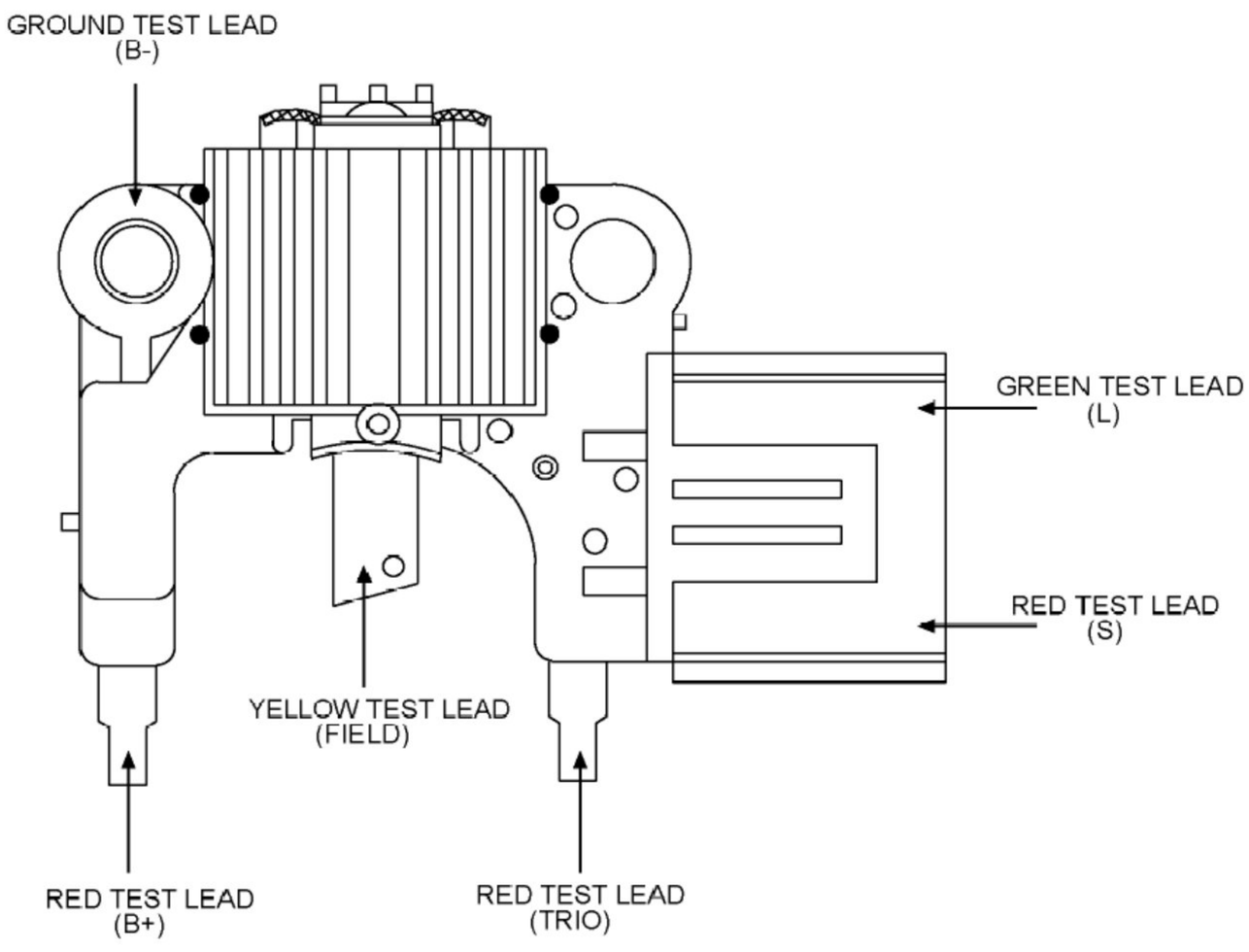

TRANSPO TESTER INSTRUCTIONS

for MITSUBISHI type regulators

PART NO.	FLD	VOLT	SET POINT	PART NO.	FLD	VOLT	SET POINT
IM292	**A**	**12**	**14.5**				

1. POWER OFF: Set "Voltage Range" and "FLD" switches to desired setting. Connect the voltage regulator as indicated in the diagram below.

2. POWER ON: Field lamp should blink and meter will indicate approximately the set point voltage indicated in the above table.

3. ADDITIONAL TEST: Remove red test lead from terminal marked "S" field lamp will still blink, and the meter will indicate approximately 15.5V.

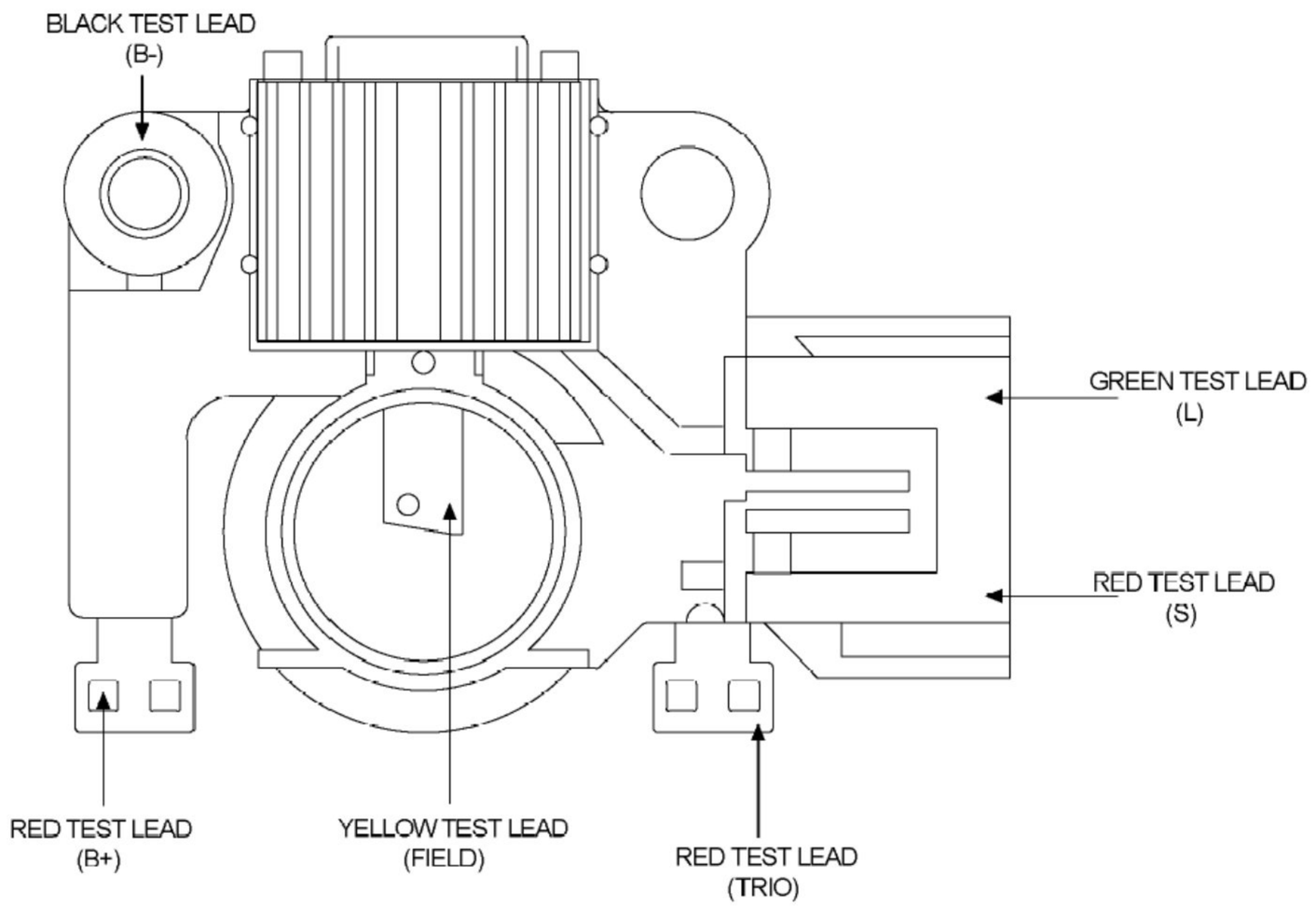

TRANSPO TESTER INSTRUCTIONS

for MITSUBISHI type regulators

PART NO.	FLD	VOLT	SET POINT	PART NO.	FLD	VOLT	SET POINT
IM832	**A**	**12**	**14.5**				

1. POWER OFF: Set "Voltage Range" and "FLD" switches to desired setting. Connect the voltage regulator as indicated in the diagram below.

2. POWER ON: Field lamp should blink and meter will indicate approximately the set point voltage indicated in the above table.

3. ADDITIONAL TEST: Remove red test lead from terminal marked "S". Indicator lamp should turn on, field lamp will still blink, and the meter will indicate approximately 15.5V.

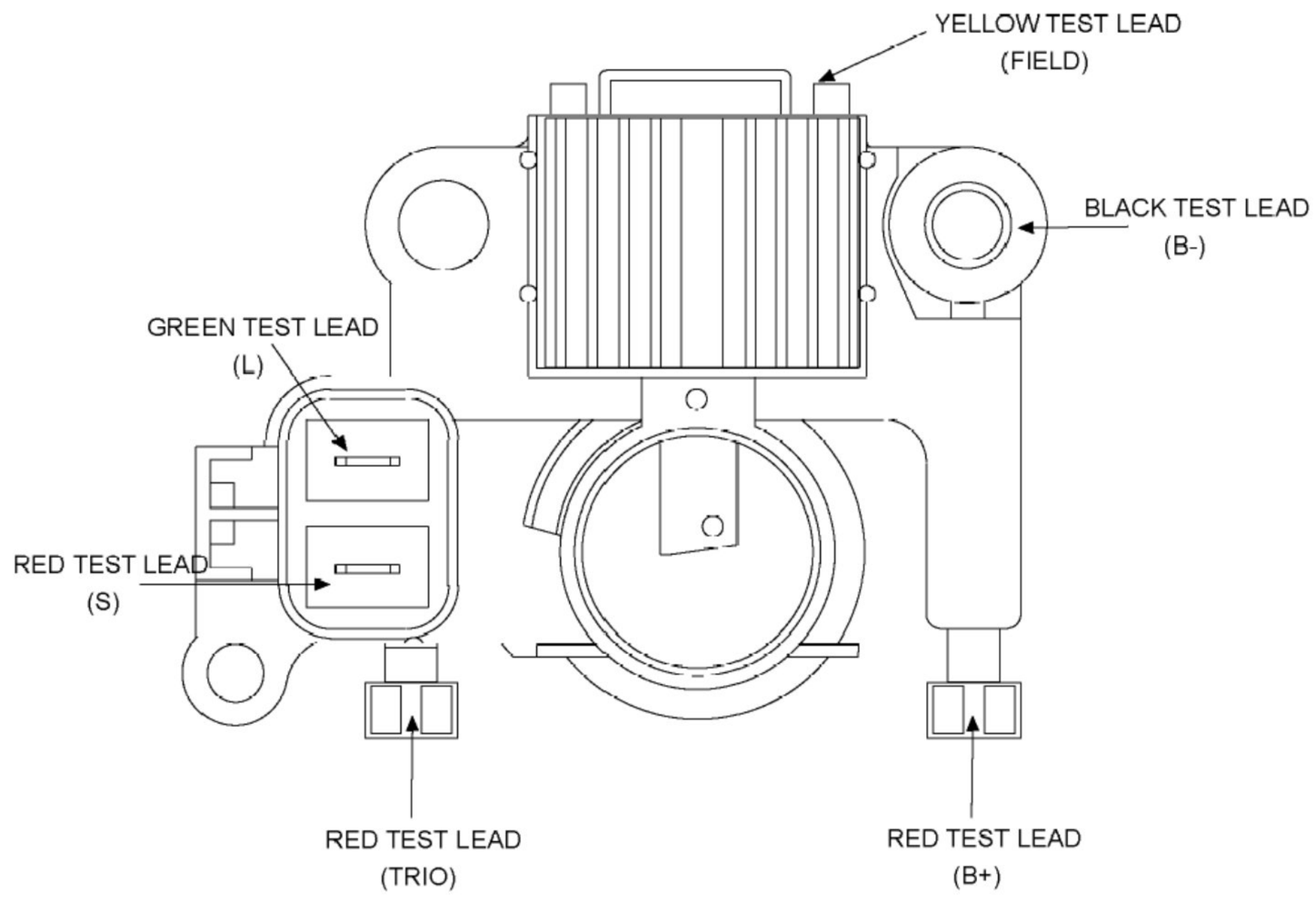

TRANSPO TESTER INSTRUCTIONS

for MITSUBISHI type regulators

PART NO.	FLD	VOLT	SET POINT	PART NO.	FLD	VOLT	SET POINT
IM275	**A**	**12**	**14.7**				
IM834	**A**	**12**	**14.7**				

1. POWER OFF: Set "Voltage Range" and "FLD" switches to desired setting. Connect the voltage regulator as indicated in the diagram below.

2. POWER ON: Field lamp should blink and meter will indicate approximately the set point voltage indicated in the above table.

3. ADDITIONAL TEST:

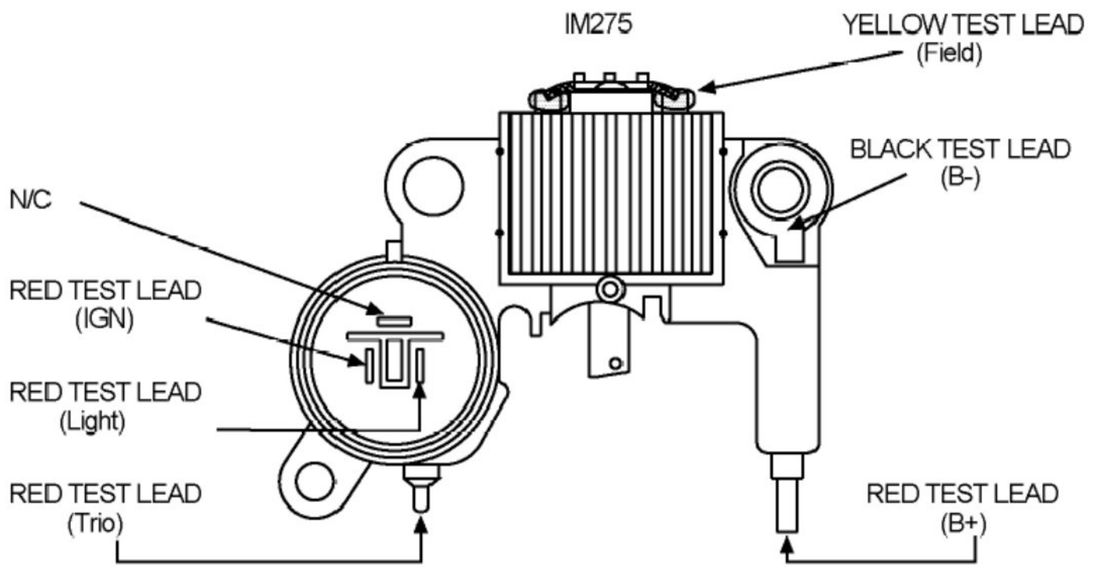

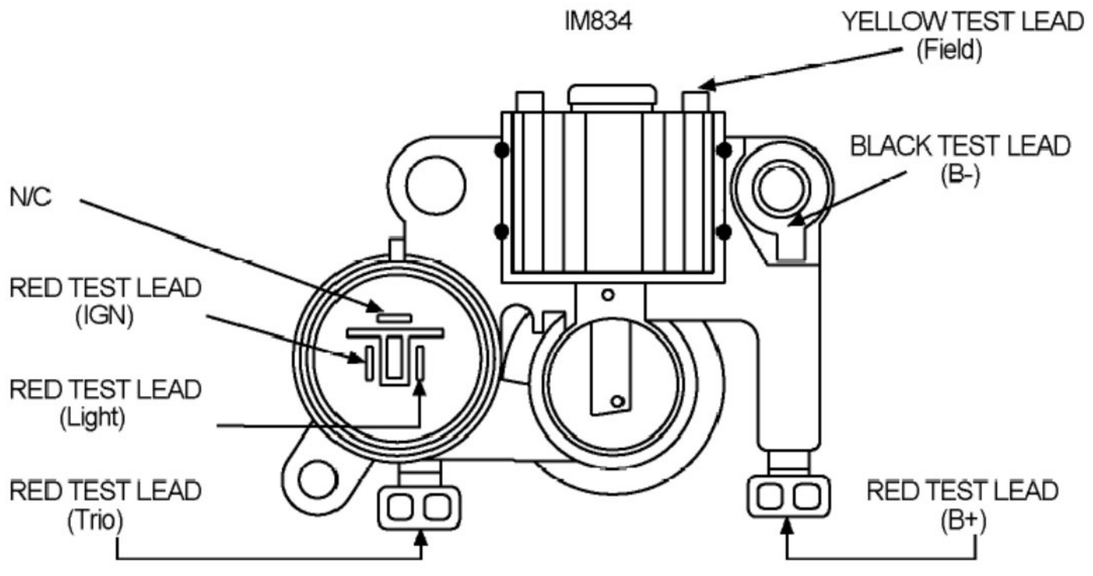

TRANSPO TESTER INSTRUCTIONS

for MITSUBISHI type regulators

PART NO.	FLD	VOLT	SET POINT	PART NO.	FLD	VOLT	SET POINT
IM836	**A**	**14**	**14.5**				

1. POWER OFF: Set "Voltage Range" and "FLD" switches to desired setting. Connect the voltage regulator as indicated in the diagram below.

2. POWER ON: Field lamp should blink and meter will indicate approximately the set point voltage indicated in the above table.

3. ADDITIONAL TEST: Remove red test lead from terminal marked "A". Field lamp should still blink, indicator light will turn on and the meter will indicate approximately 15.5V.

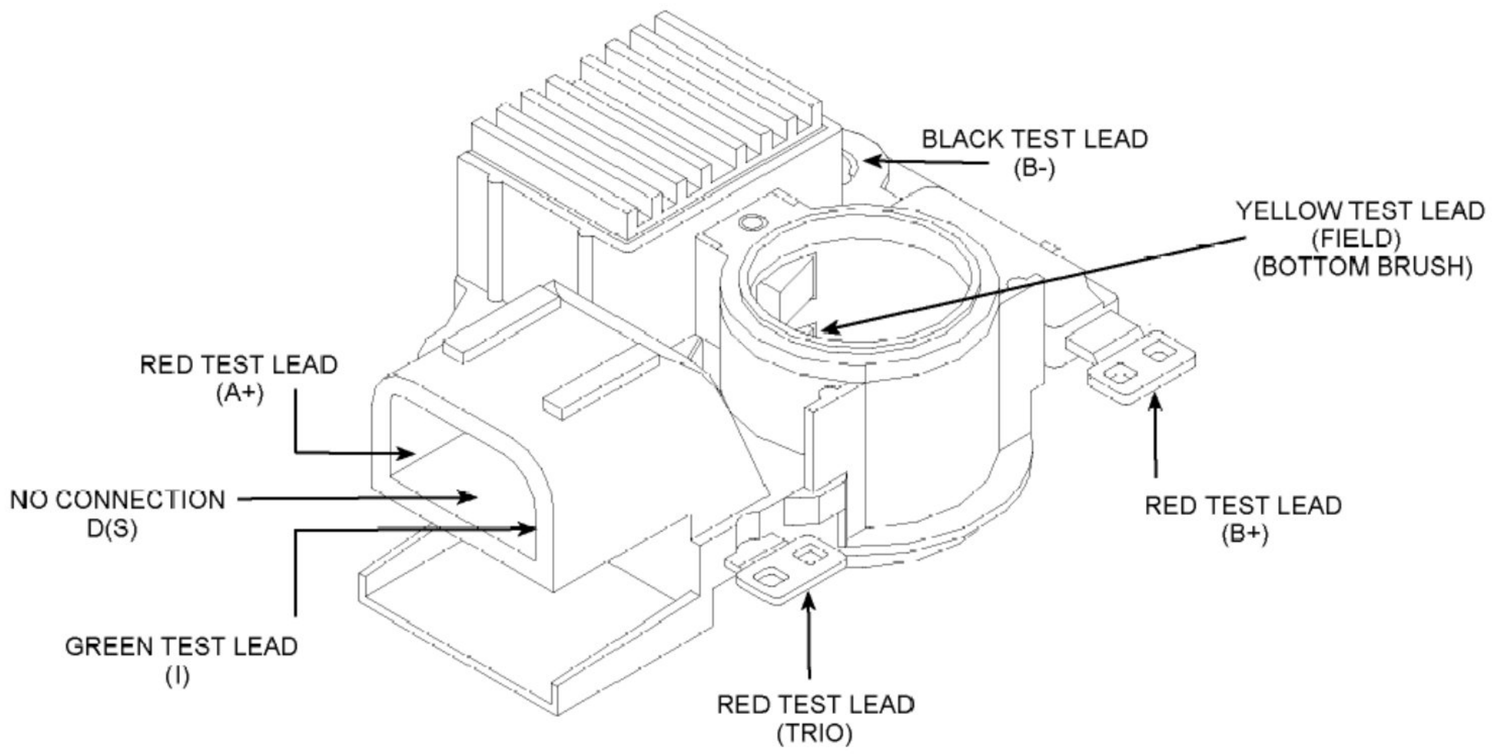

TRANSPO TESTER INSTRUCTIONS

for MITSUBISHI type regulators

PART NO.	FLD	VOLT	SET POINT	PART NO.	FLD	VOLT	SET POINT
IM290	**A**	**12**	**14.7**				

1. POWER OFF: Set "Voltage Range" and "FLD" switches to desired setting. Connect the voltage regulator as indicated in the diagram below.

2. POWER ON: Field lamp should blink and meter will indicate approximately the set point voltage indicated in the above table.

3. ADDITIONAL TEST:

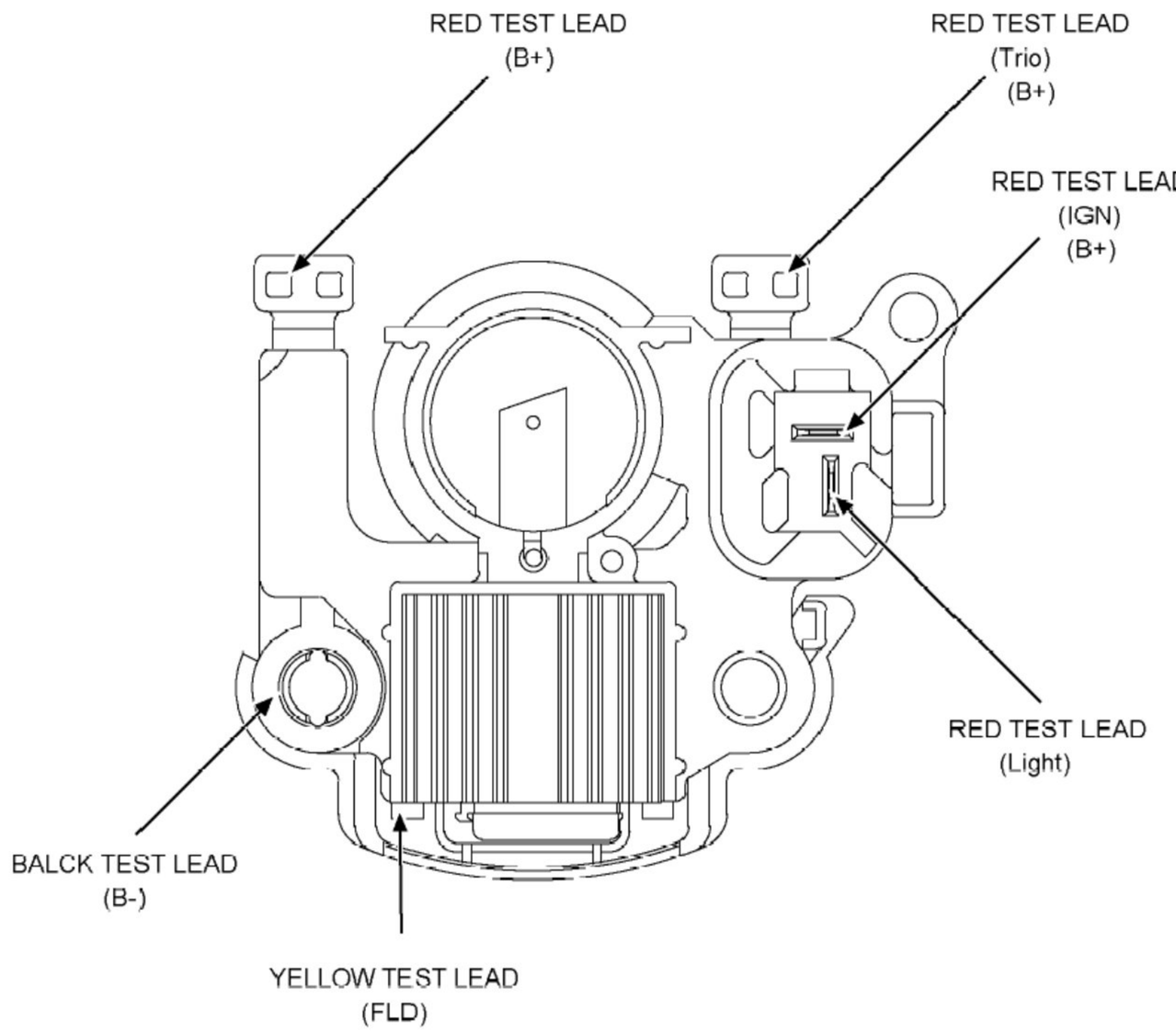

TRANSPO TESTER INSTRUCTIONS

for MITSUBISHI type regulators

PART NO.	FLD	VOLT	SET POINT	PART NO.	FLD	VOLT	SET POINT
IM830HD	**A**	**12**	**14.5**				

1. POWER OFF: Set "Voltage Range" and "FLD" switches to desired setting. Connect the voltage regulator as indicated in the diagram below.

2. POWER ON: Field lamp should blink and meter will indicate approximately the set point voltage indicated in the above table.

3. ADDITIONAL TEST: Remove red test lead from terminal marked "S". Field lamp should still blink, indicator light will turn on and the meter will indicate approximately 15.5 volts.

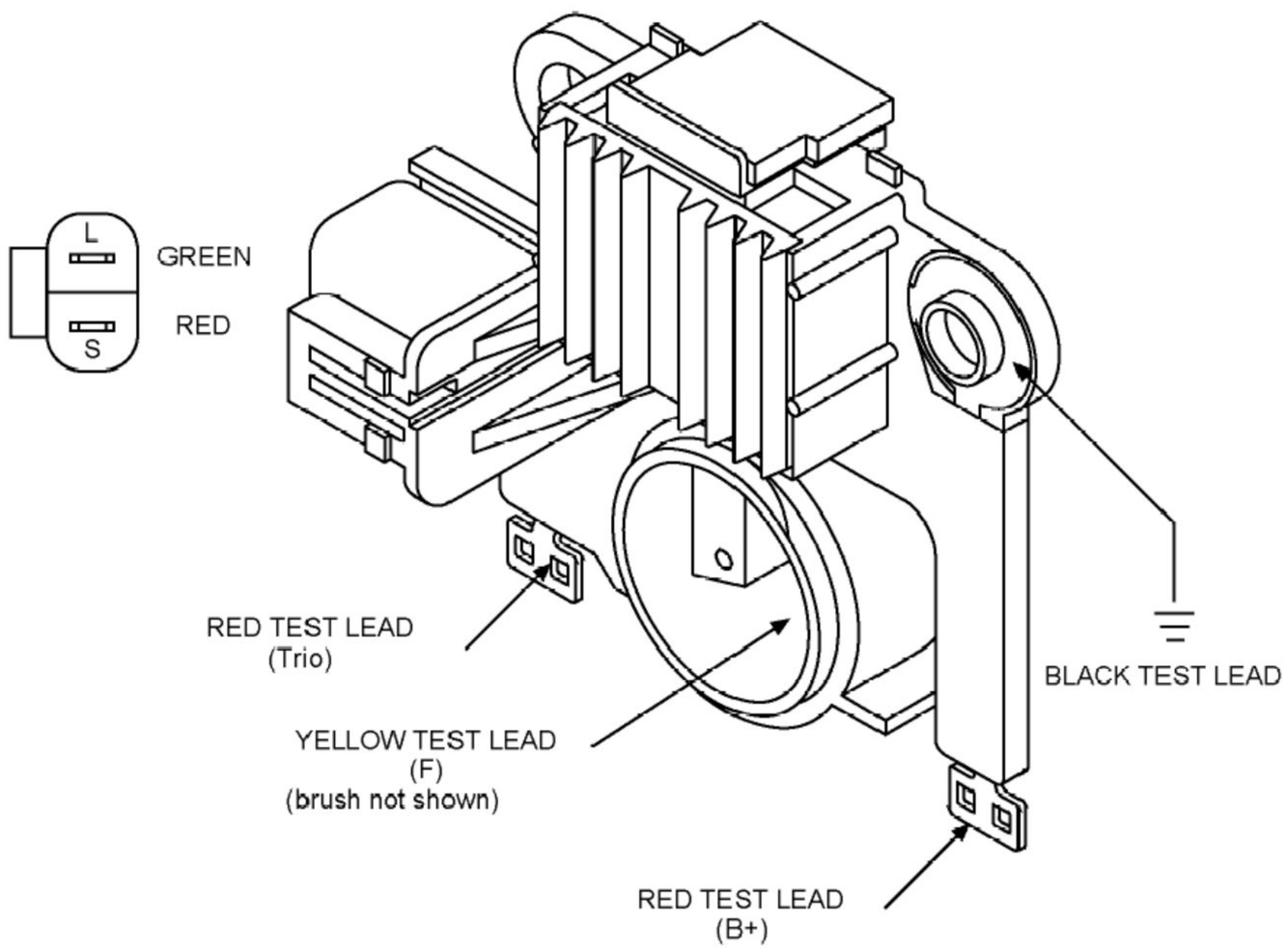

TRANSPO TESTER INSTRUCTIONS

for MITSUBISHI type regulators

PART NO.	FLD	VOLT	SET POINT	PART NO.	FLD	VOLT	SET POINT
IM840	**A**	**12**	**14.6**				

1. POWER OFF: Set "Voltage Range" and "FLD" switches to desired setting. Connect the voltage regulator as indicated in the diagram below.

2. POWER ON: Field lamp should blink and meter will indicate approximately the set point voltage indicated in the above table.

3. ADDITIONAL TEST: Remove red sense lead & indicator light will turn on & Voltage will rise to 15.5 volts.

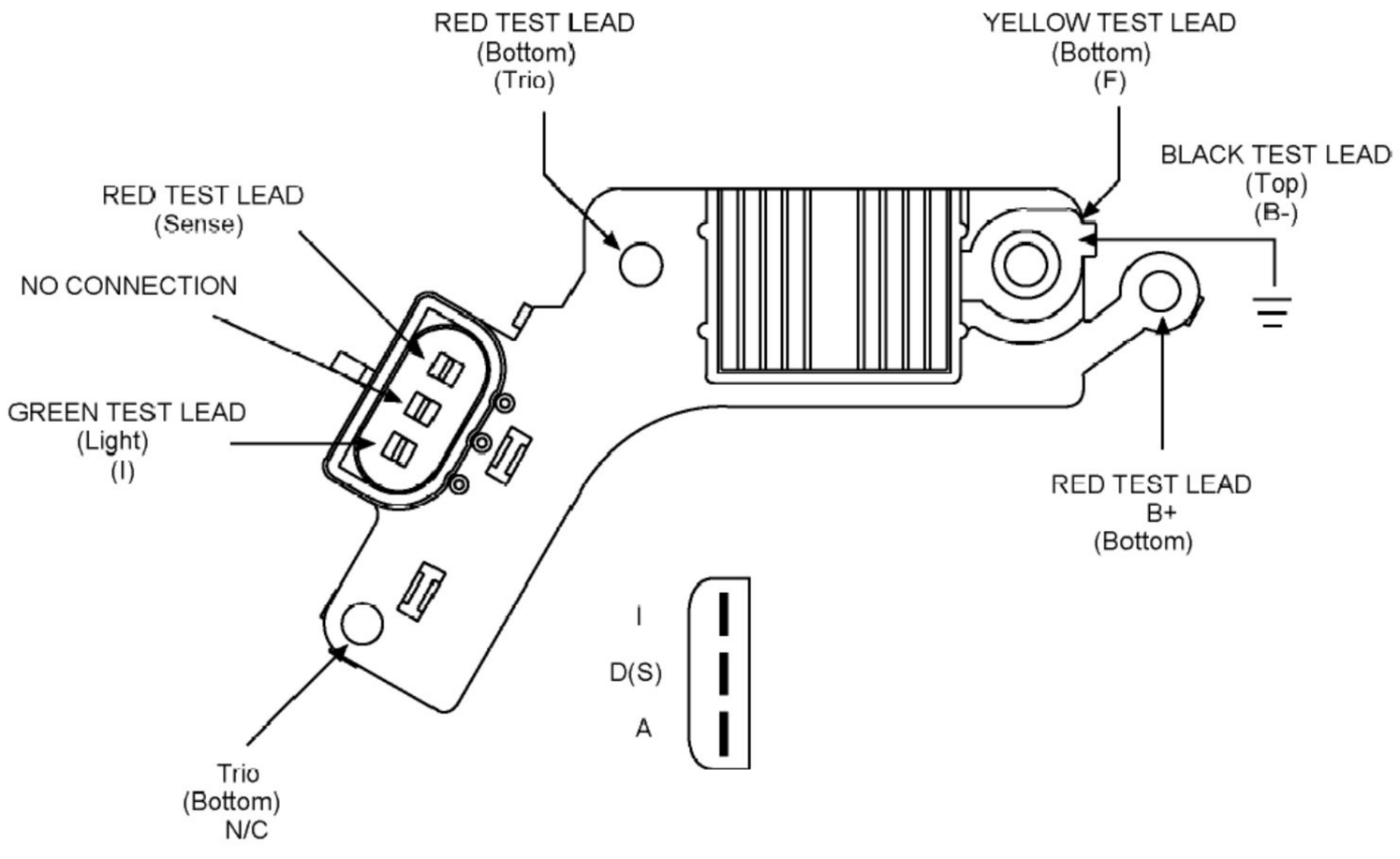

TRANSPO TESTER INSTRUCTIONS

for MITSUBISHI type regulators

PART NO.	FLD	VOLT	SET POINT	PART NO.	FLD	VOLT	SET POINT
IM293	**A**	**12**	**14.7**				

1. POWER OFF: Set "Voltage Range" and "FLD" switches to desired setting. Connect the voltage regulator as indicated in the diagram below.

2. POWER ON: Field lamp should blink and meter will indicate approximately the set point voltage indicated in the above table.

3. ADDITIONAL TEST:

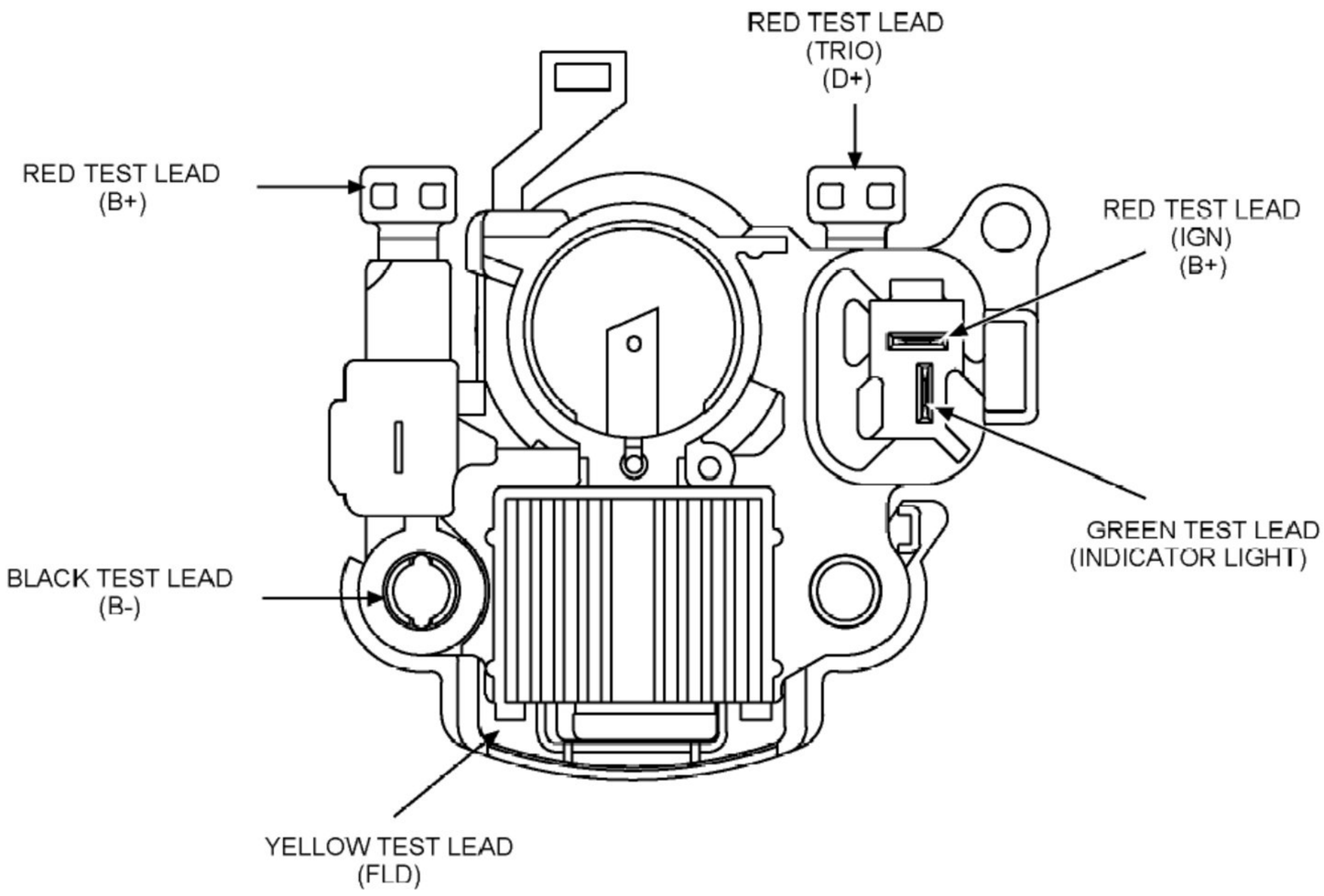

TRANSPO TESTER INSTRUCTIONS

for MITSUBISHI type regulators

PART NO.	FLD	VOLT	SET POINT	PART NO.	FLD	VOLT	SET POINT
IM831	**A**	**12**	**14.5**				

1. POWER OFF: Set "Voltage Range" and "FLD" switches to desired setting. Connect the voltage regulator as indicated in the diagram below.

2. POWER ON: Field lamp should blink and meter will indicate approximately the set point voltage indicated in the above table.

3. ADDITIONAL TEST: Remove red test lead from terminal marked "S". Field lamp should still blink and the meter will indicate approximately 15.5 volts.

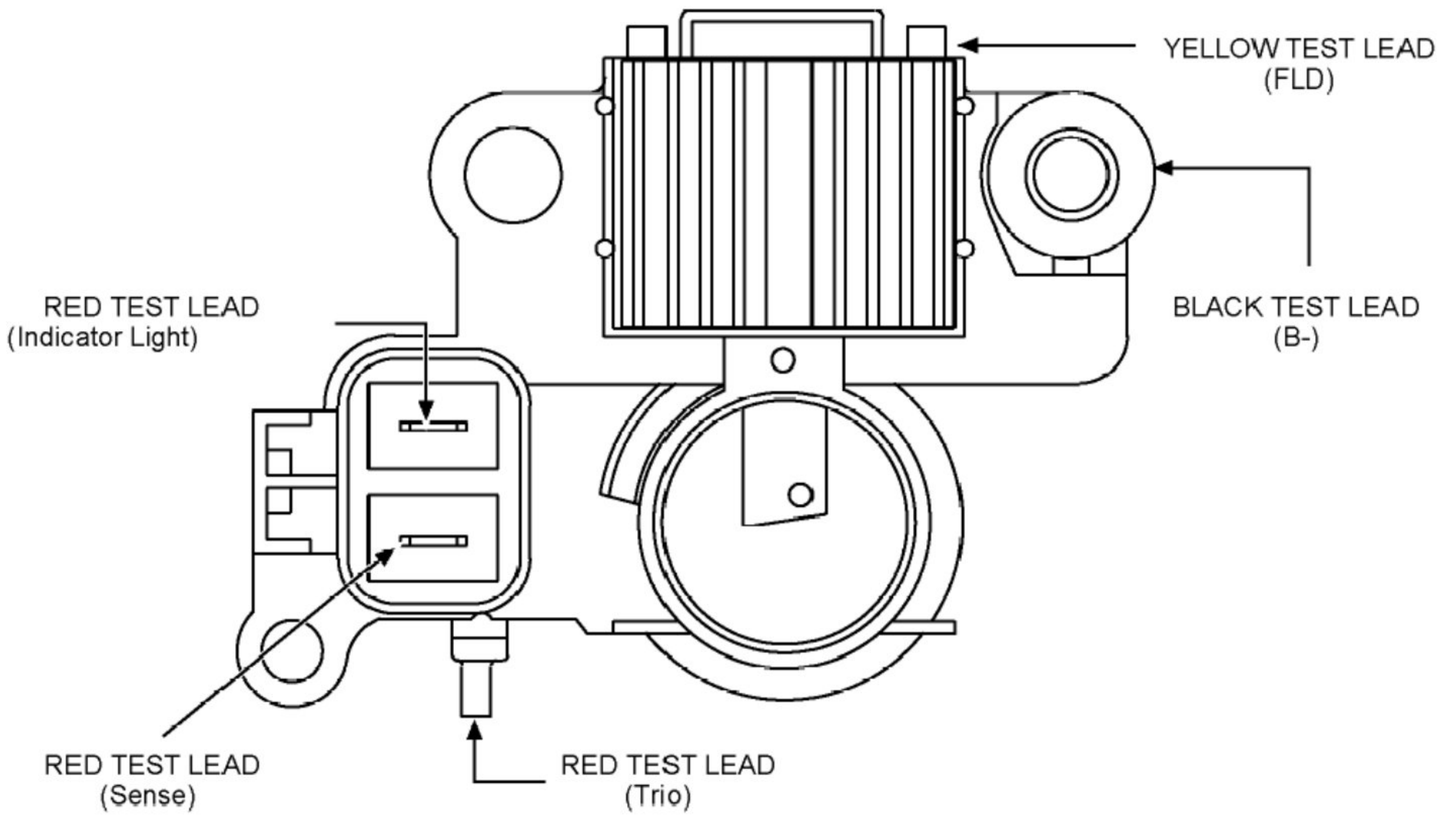

TRANSPO TESTER INSTRUCTIONS

for MITSUBISHI type regulators

PART NO.	FLD	VOLT	SET POINT	PART NO.	FLD	VOLT	SET POINT
IM845	**A**	**12**	**14.7**				

1. POWER OFF: Set "Voltage Range" and "FLD" switches to desired setting. Connect the voltage regulator as indicated in the diagram below.

2. POWER ON: Field lamp should blink and meter will indicate approximately the set point voltage indicated in the above table.

3. ADDITIONAL TEST: Disconnect sense & voltage should rise to approximately 15.5 volts and light come on. Reconnect sense. Connect black test lead to "C", voltage should drop to approximately 12.5 volts.
Using VRC1000: Push the choke drive switch and the "Choke Drive Indicator Lamp" will turn on between 16.0V and 17.1V.

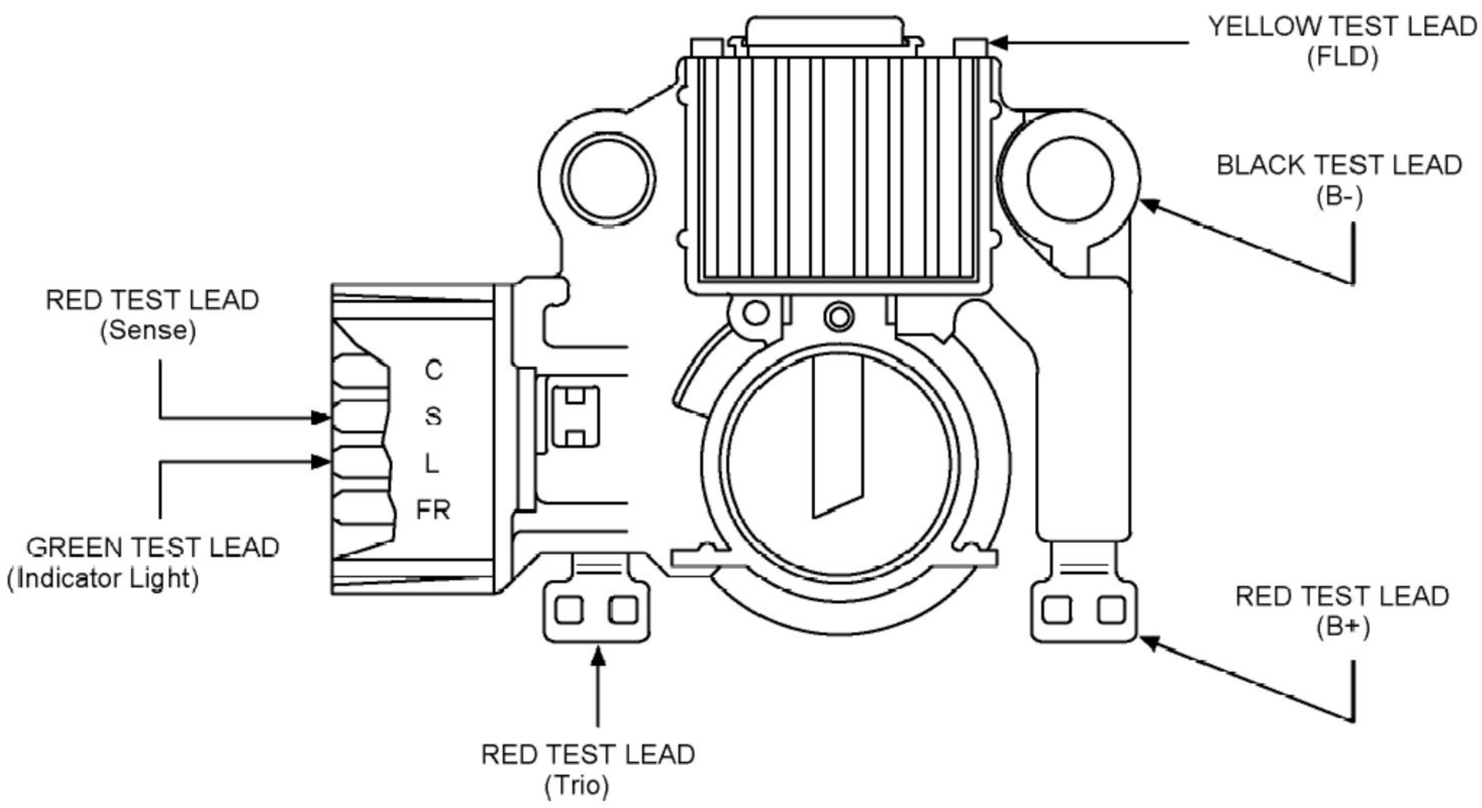

TRANSPO TESTER INSTRUCTIONS

for MITSUBISHI type regulators

PART NO.	FLD	VOLT	SET POINT	PART NO.	FLD	VOLT	SET POINT
IM286	**A**	**24**	**28.7**				
IM294	**A**	**12**	**14.6**				

1. POWER OFF: Set "Voltage Range" and "FLD" switches to desired setting. Connect the voltage regulator as indicated in the diagram below.

2. POWER ON: Field lamp should blink and meter will indicate approximately the set point voltage indicated in the above table.

3. ADDITIONAL TEST:

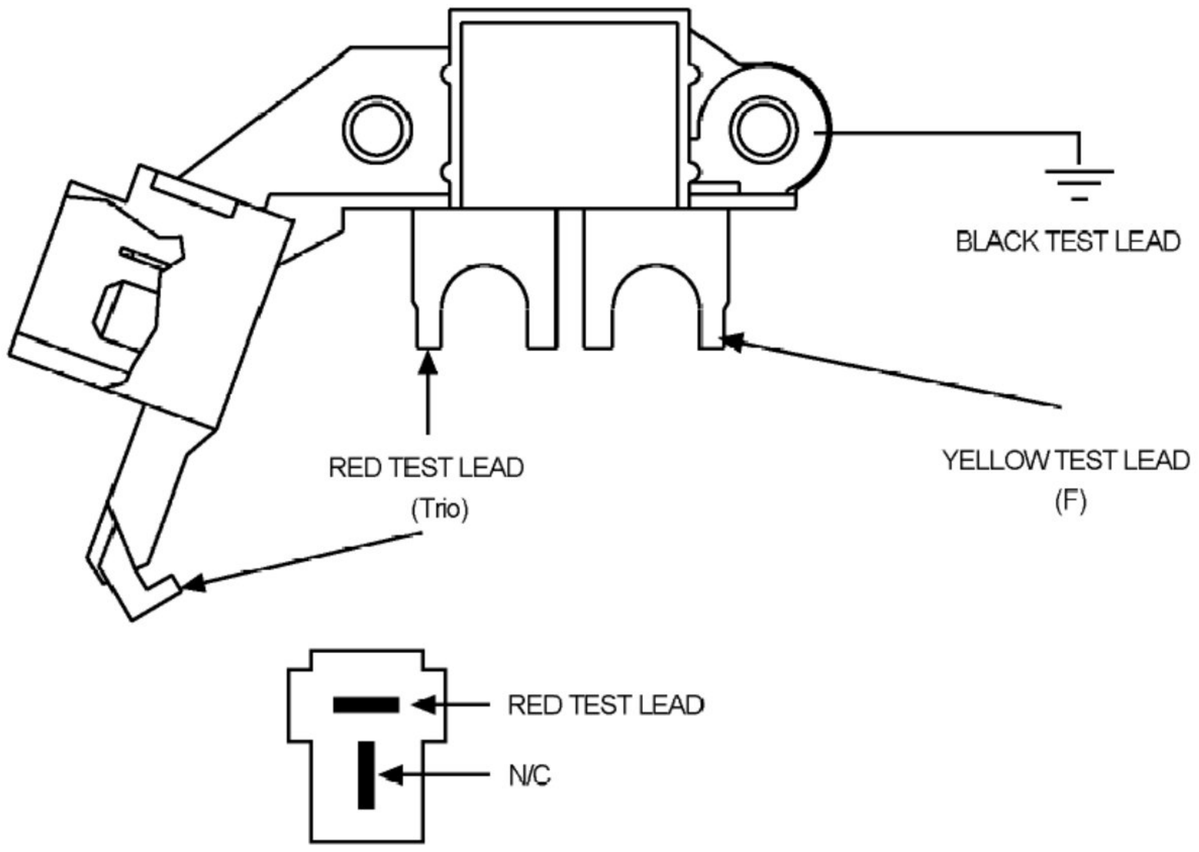

TRANSPO TESTER INSTRUCTIONS

for MITSUBISHI type regulators

PART NO.	FLD	VOLT	SET POINT	PART NO.	FLD	VOLT	SET POINT
IM318	**A**	**12**	**14.4**				

1. POWER OFF: Set "Voltage Range" and "FLD" switches to desired setting. Connect the voltage regulator as indicated in the diagram below.

2. POWER ON: Field lamp should blink and meter will indicate approximately the set point voltage indicated in the above table.

3. ADDITIONAL TEST: **Using VRC1000**: Push the choke drive switch and the "Choke Drive Indicator Lamp" will turn on between 16.0V and 17.1V.

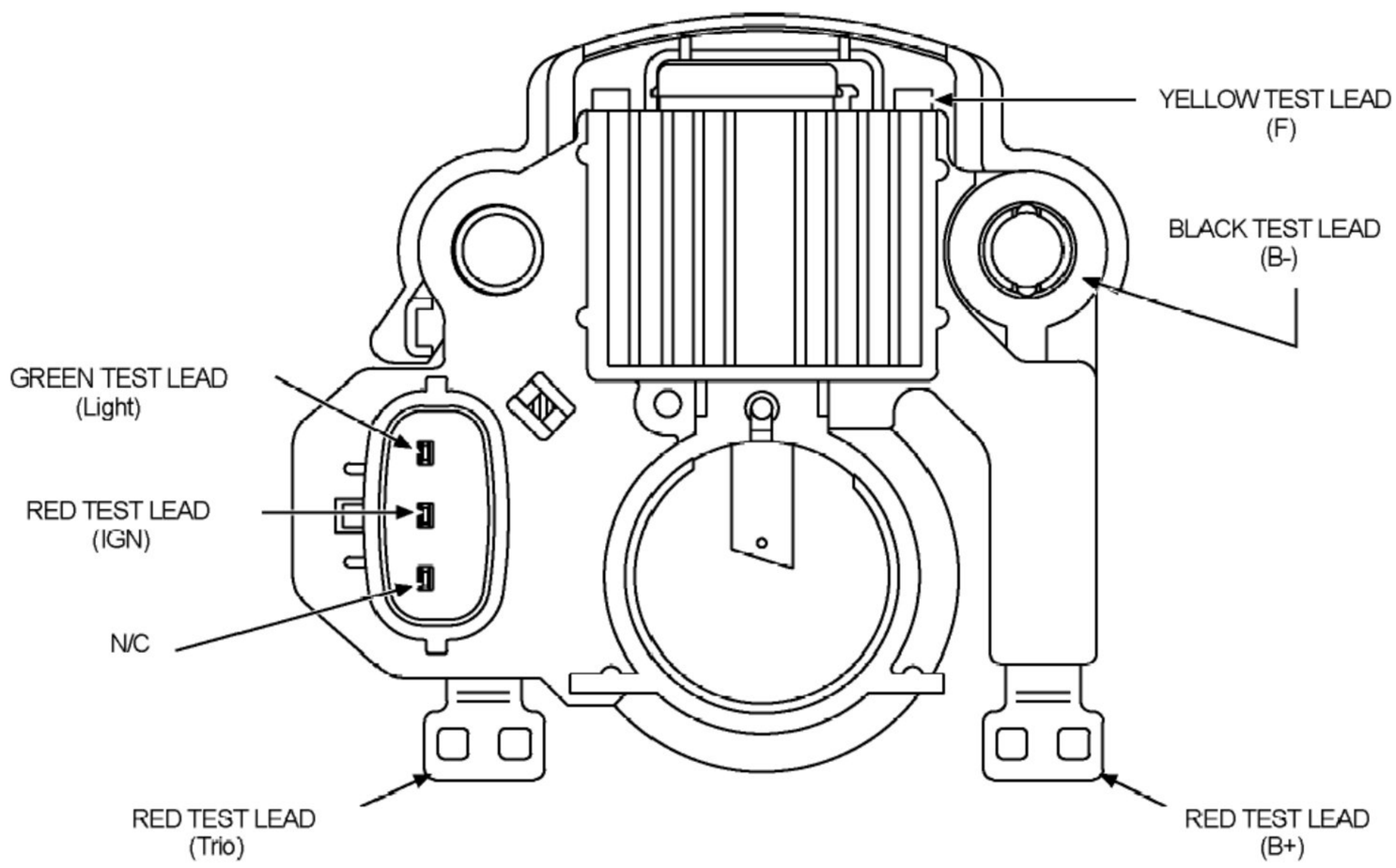

TRANSPO TESTER INSTRUCTIONS

for MITSUBISHI type regulators

PART NO.	FLD	VOLT	SET POINT	PART NO.	FLD	VOLT	SET POINT
IM850	**A**	**12**	**14.5**				

1. POWER OFF: Set "Voltage Range" and "FLD" switches to desired setting. Connect the voltage regulator as indicated in the diagram below.

2. POWER ON: Field lamp should blink and meter will indicate approximately the set point voltage indicated in the above table.

3. ADDITIONAL TEST: * Ground "C" terminal and voltage will drop to approximately 12.5V. field lamp stays on.
Using VRC1000: Push the choke drive switch and the "Choke Drive Indicator Lamp" will turn on between 16.0V and 17.1V.

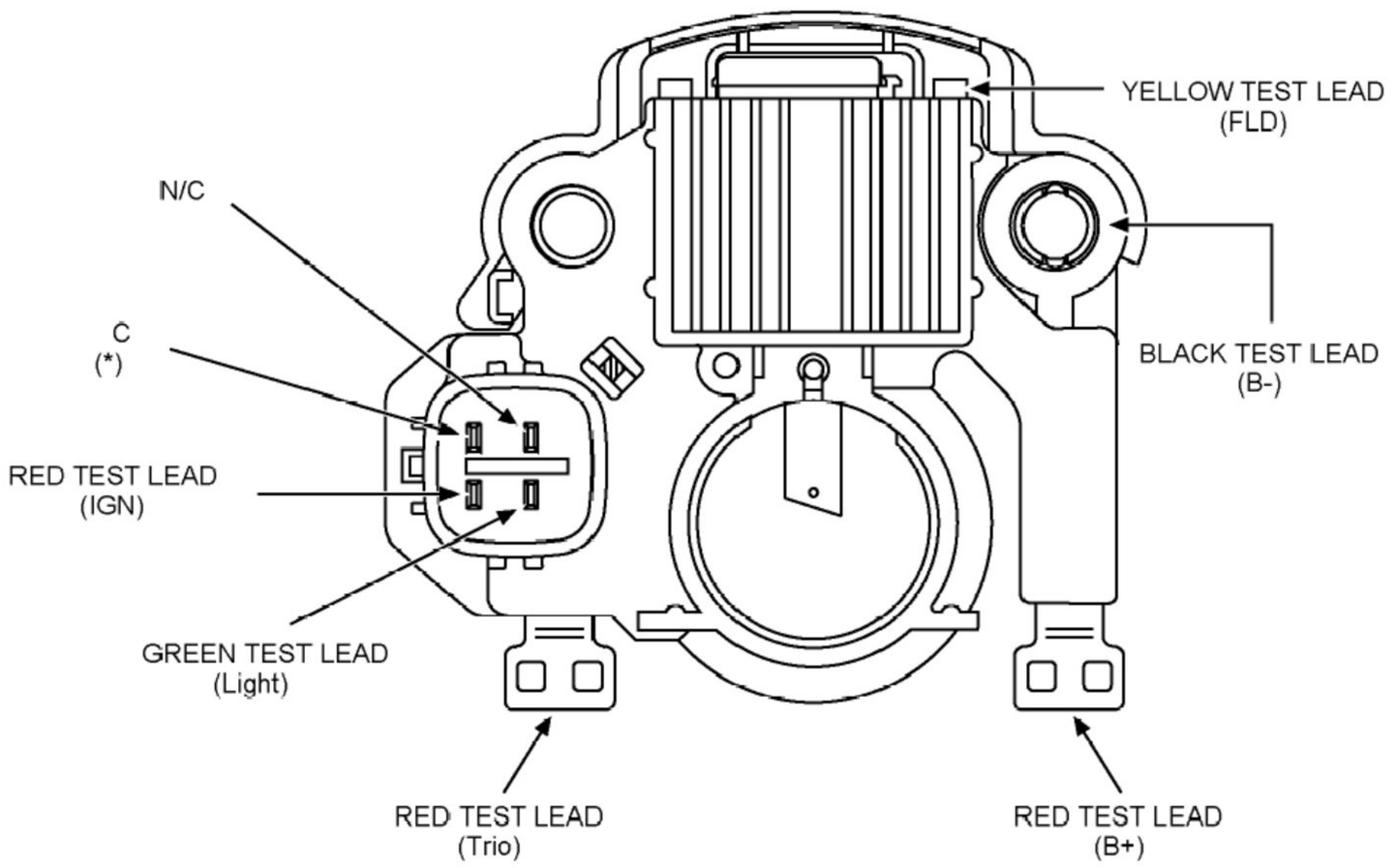

TRANSPO TESTER INSTRUCTIONS

for MITSUBISHI type regulators

PART NO.	FLD	VOLT	SET POINT	PART NO.	FLD	VOLT	SET POINT
IM232	**A**	**12**	**14.3**				

1. POWER OFF: Set "Voltage Range" and "FLD" switches to desired setting. Connect the voltage regulator as indicated in the diagram below.

2. POWER ON: Field lamp should blink and meter will indicate approximately the set point voltage indicated in the above table.

3. ADDITIONAL TEST:

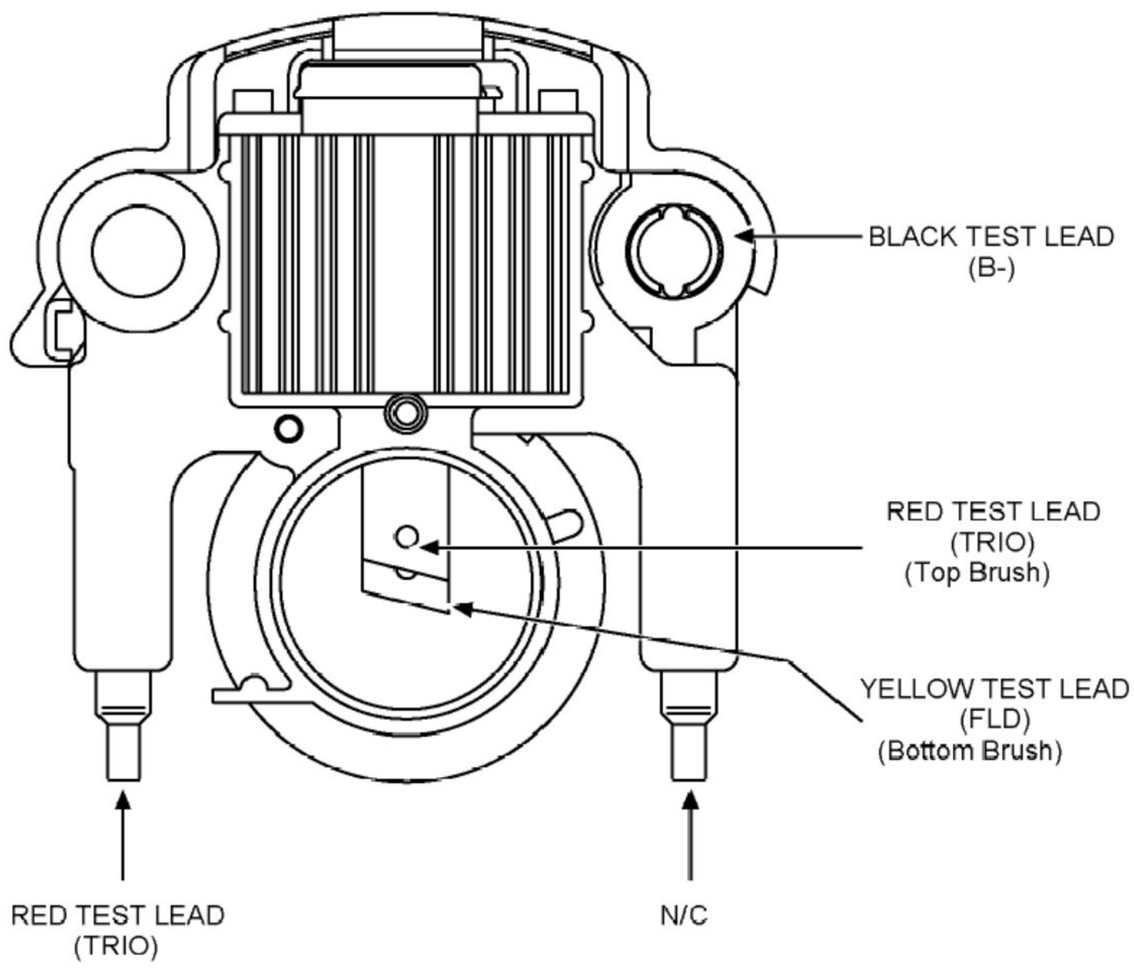

TRANSPO TESTER INSTRUCTIONS

for MITSUBISHI type regulators

PART NO.	FLD	VOLT	SET POINT	PART NO.	FLD	VOLT	SET POINT
IM211	**A**	**12**	**14.5**				

1. POWER OFF: Set "Voltage Range" and "FLD" switches to desired setting. Connect the voltage regulator as indicated in the diagram below.

2. POWER ON: Field lamp should blink and meter will indicate approximately the set point voltage indicated in the above table.

3. ADDITIONAL TEST:

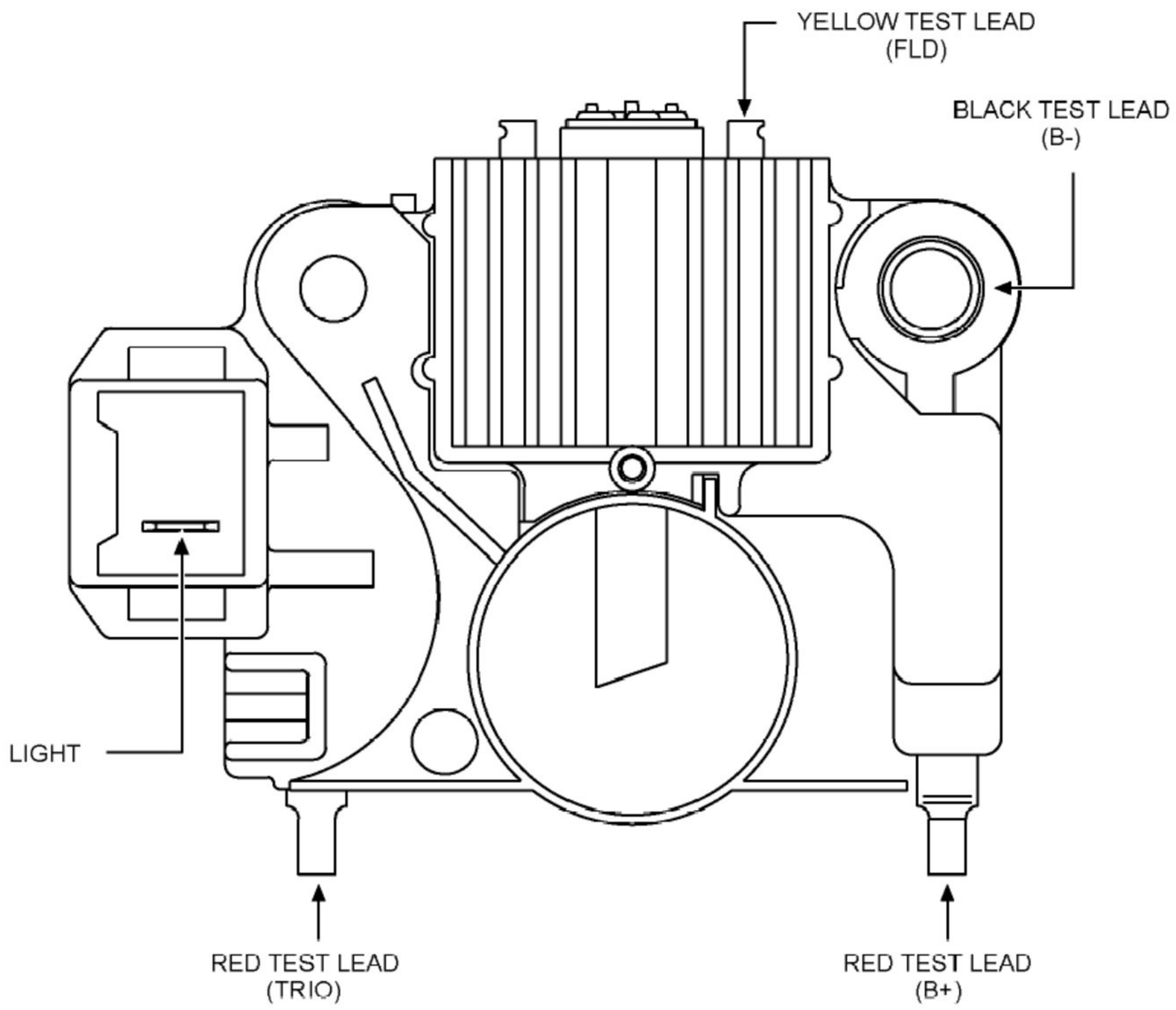

TRANSPO TESTER INSTRUCTIONS

for MITSUBISHI type regulators

PART NO.	FLD	VOLT	SET POINT	PART NO.	FLD	VOLT	SET POINT
IM381	**A**	**12**	**14.6**				

1. POWER OFF: Set "Voltage Range" and "FLD" switches to desired setting. Connect the voltage regulator as indicated in the diagram below.

2. POWER ON: Field lamp should blink and meter will indicate approximately the set point voltage indicated in the above table.

3. ADDITIONAL TEST: Remove white test lead and lamp comes on, voltage drops to 12.0 volts and field light stays on . Remove green test lead from light and field light goes off.
Using VRC1000: Push the choke drive switch and the "Choke Drive Indicator Lamp" will turn on between 16.0V and 17.1V.

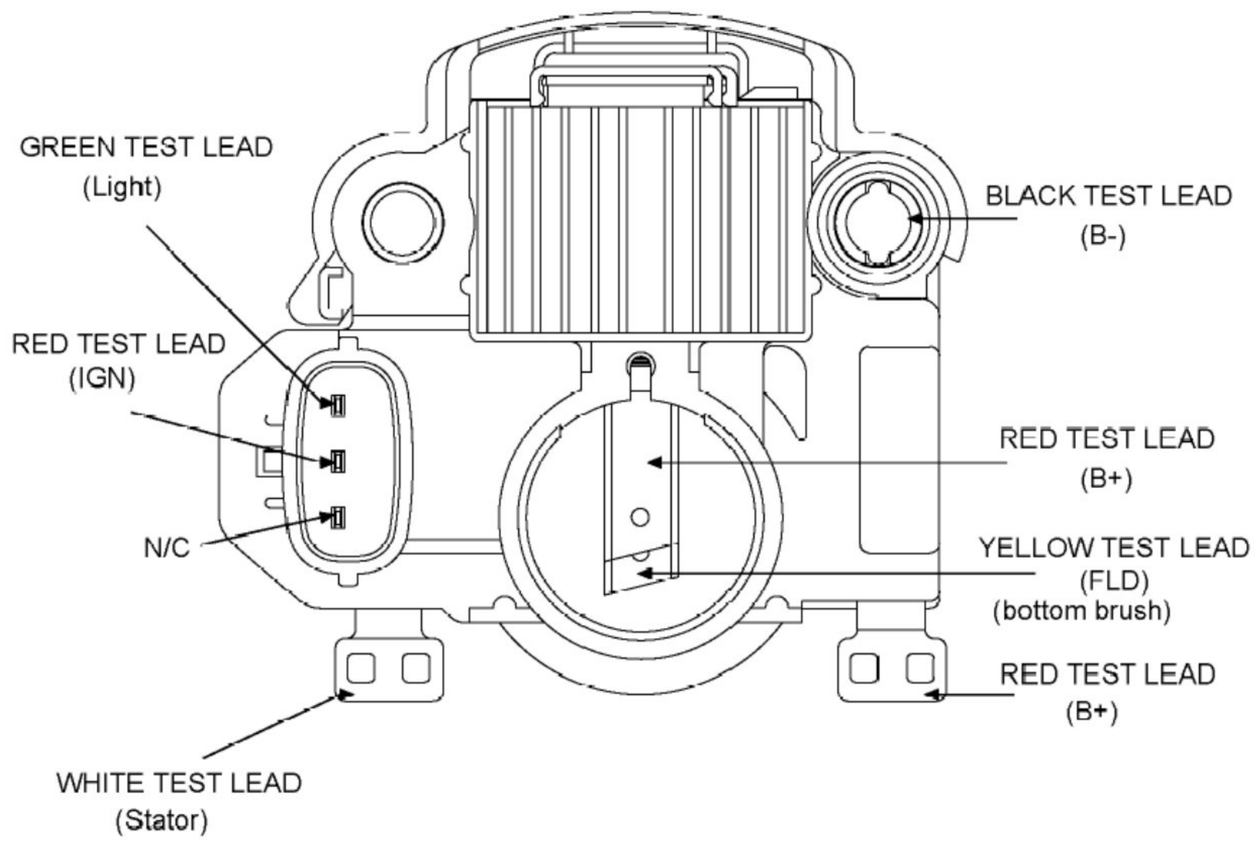

TRANSPO TESTER INSTRUCTIONS

for MITSUBISHI type regulators

PART NO.	FLD	VOLT	SET POINT	PART NO.	FLD	VOLT	SET POINT
IM345	**A**	**12**	**14.3**				

1. POWER OFF: Set "Voltage Range" and "FLD" switches to desired setting. Connect the voltage regulator as indicated in the diagram below.

2. POWER ON: Field lamp should blink and meter will indicate approximately the set point voltage indicated in the above table.

3. ADDITIONAL TEST:

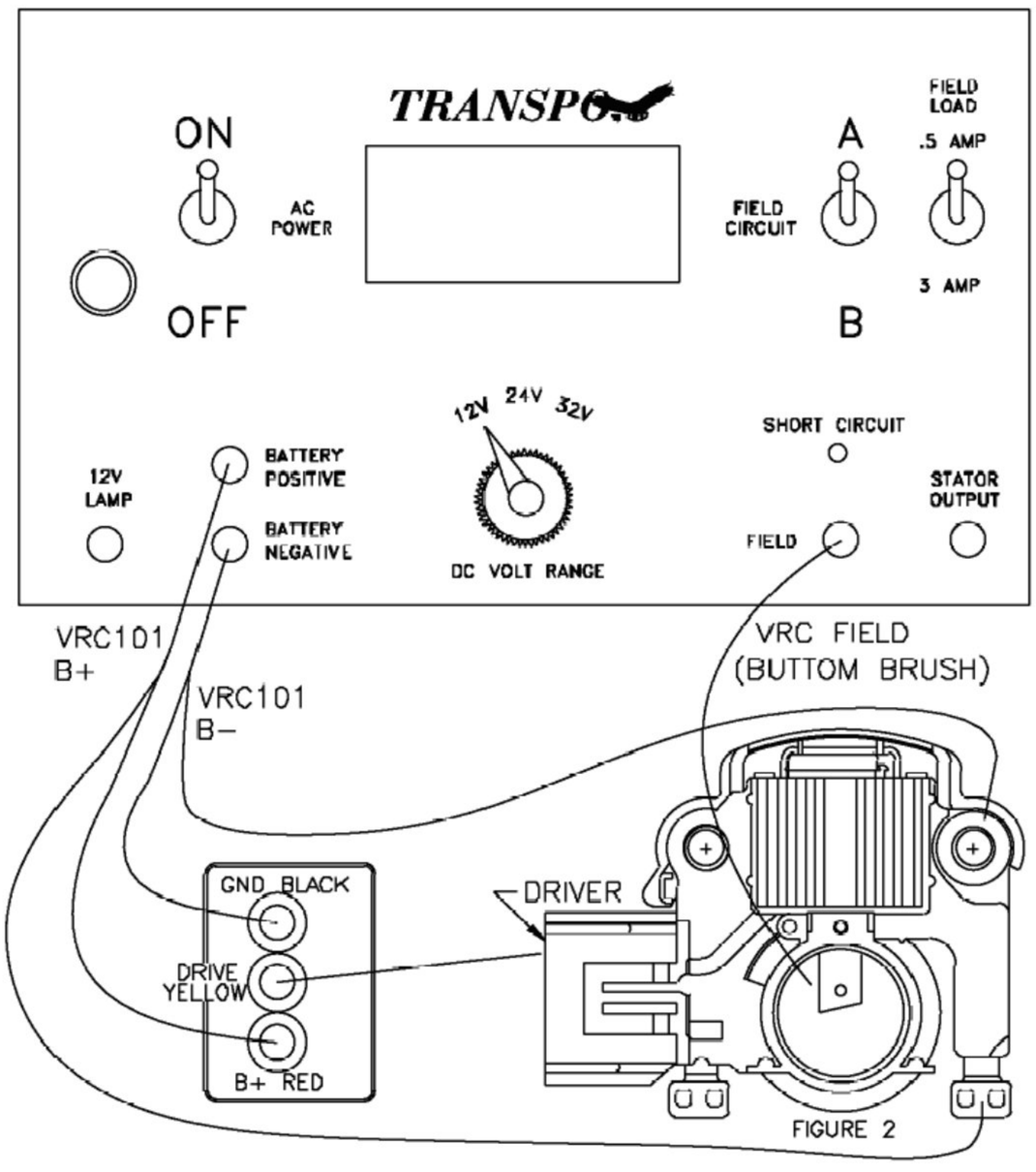

FIGURE 2

TRANSPO TESTER INSTRUCTIONS

for MITSUBISHI type regulators

PART NO.	FLD	VOLT	SET POINT	PART NO.	FLD	VOLT	SET POINT
IM843	**A**	**24**	**28.5**				

1. POWER OFF: Set "Voltage Range" and "FLD" switches to desired setting. Connect the voltage regulator as indicated in the diagram below.

2. POWER ON: Field lamp should blink and meter will indicate approximately the set point voltage indicated in the above table.

3. ADDITIONAL TEST:

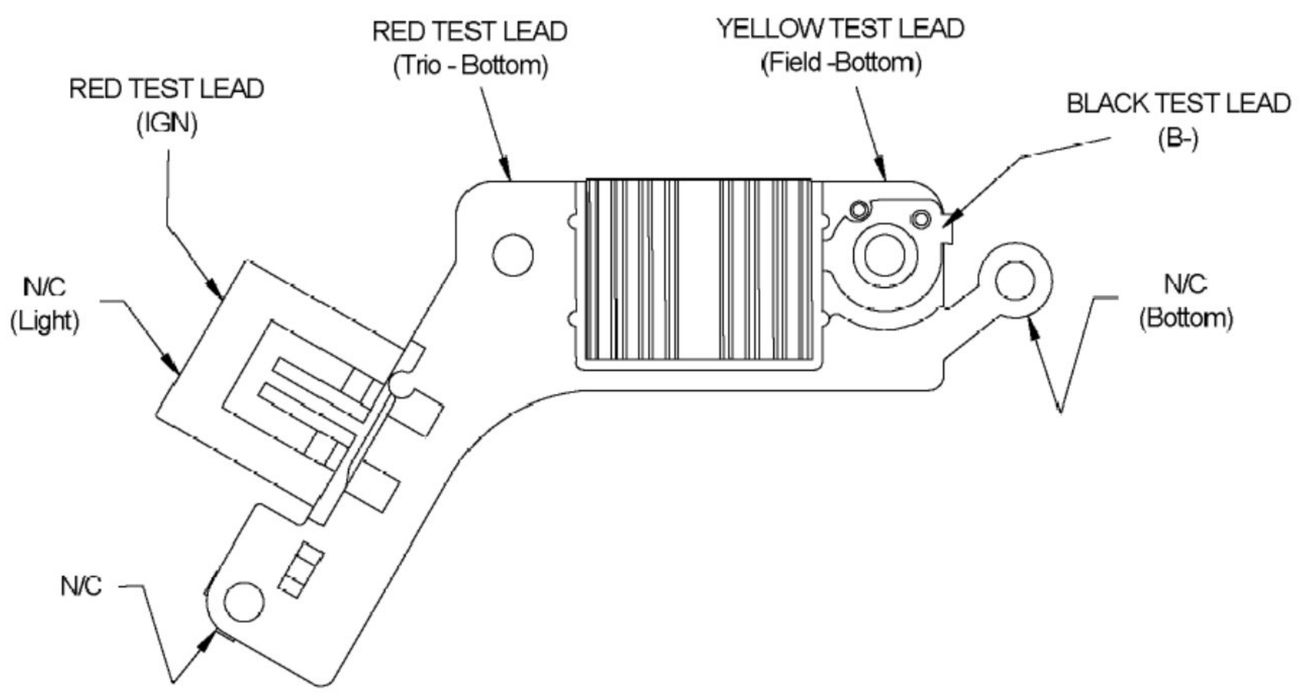

TRANSPO TESTER INSTRUCTIONS

for MITSUBISHI type regulators

PART NO.	FLD	VOLT	SET POINT	PART NO.	FLD	VOLT	SET POINT
IM369	**A**	**12**	**14.3**				

1. POWER OFF: Set "Voltage Range" and "FLD" switches to desired setting. Connect the voltage regulator as indicated in the diagram below.

2. POWER ON: Field lamp should blink and meter will indicate approximately the set point voltage indicated in the above table.

3. ADDITIONAL TEST: Remove white test lead from terminal marked "Stator" field and lamp light comes on. Remove green test lead from terminal marked "Light" field and lamp light goes off.
Using VRC1000: Push the choke drive switch and the "Choke Drive Indicator Lamp" will turn on between 16.0V and 17.1V.

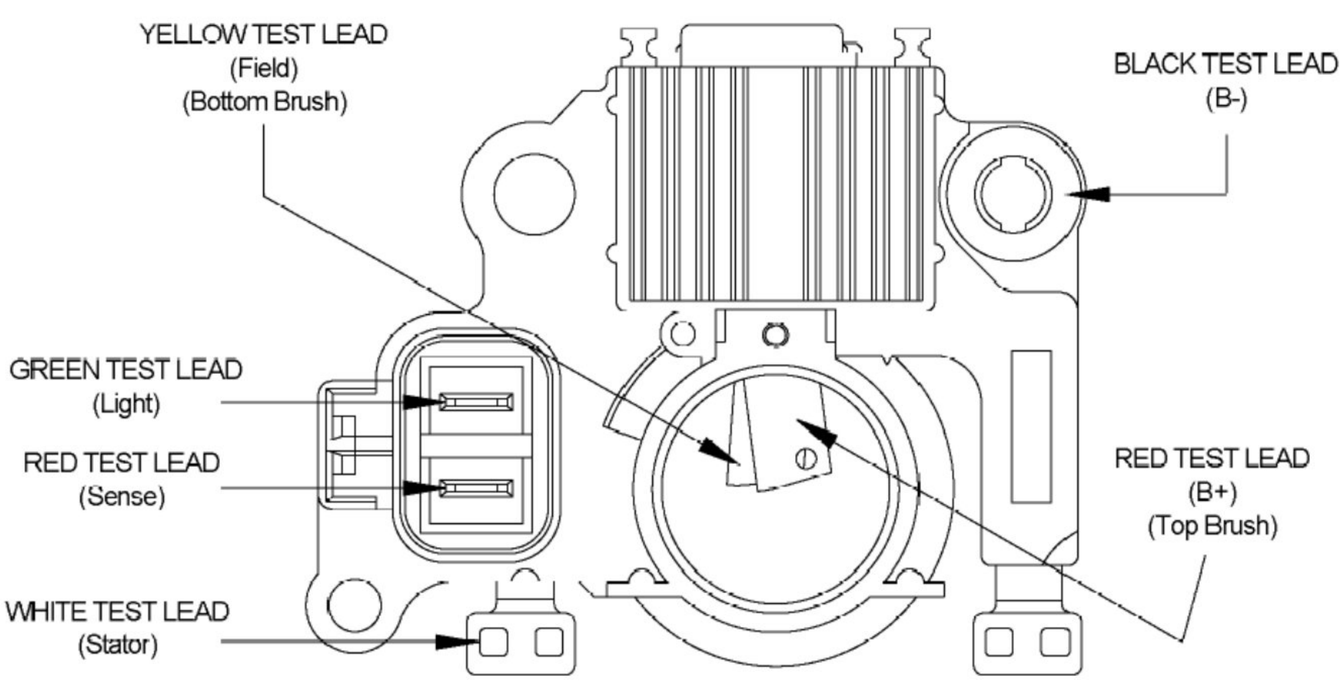

TRANSPO TESTER INSTRUCTIONS

for MITSUBISHI type regulators

PART NO.	FLD	VOLT	SET POINT	PART NO.	FLD	VOLT	SET POINT
IM851	**A**	**12**	**14.5**				

1. POWER OFF: Set "Voltage Range" and "FLD" switches to desired setting. Connect the voltage regulator as indicated in the diagram below.

2. POWER ON: Field lamp should blink and meter will indicate approximately the set point voltage indicated in the above table.

3. ADDITIONAL TEST: Remove white test lead from terminal marked "Stator" field and lamp light comes on and voltage will indicate 12 volts. Remove green test lead from terminal marked "Lamp" and lamp light goes off. Remove red test lead from terminal marked "Ignition" and field light goes off.

* Connect black lead to "C" computer terminal and field lamp will stay on and voltage will read approximately 12.7 volts

Using VRC1000: Push the choke drive switch and the "Choke Drive Indicator Lamp" will turn on between 16.0V and 17.1V.

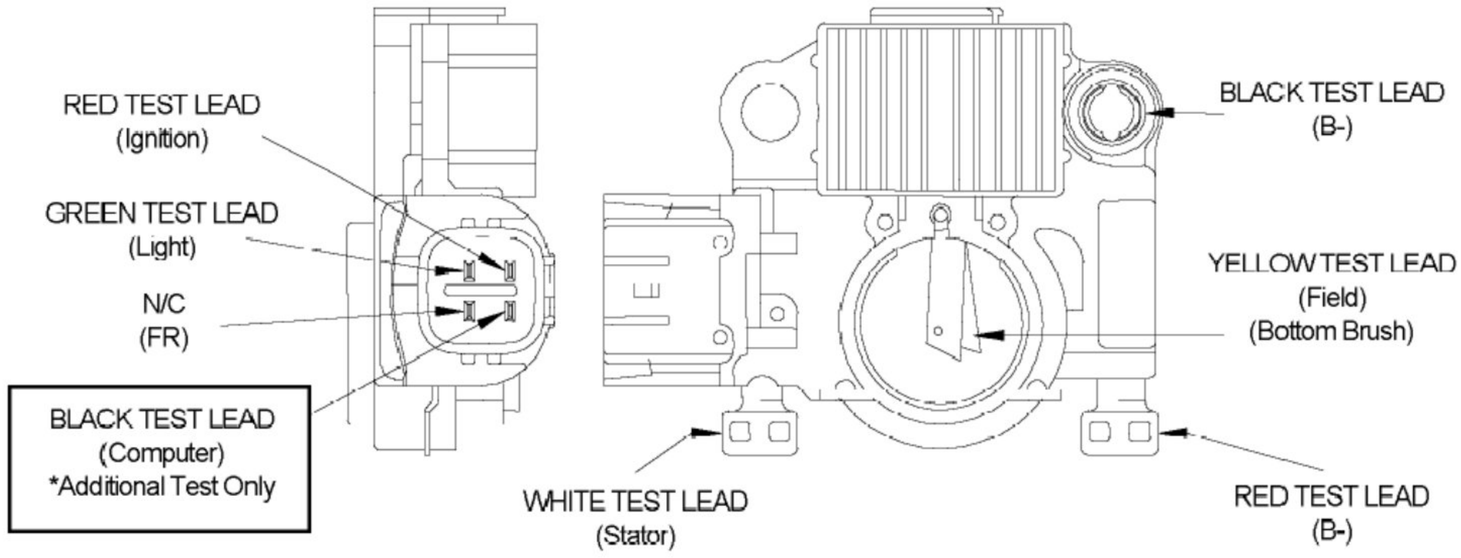

TRANSPO TESTER INSTRUCTIONS

for MITSUBISHI type regulators

PART NO.	FLD	VOLT	SET POINT	PART NO.	FLD	VOLT	SET POINT
IM757	**A**	**12**	**14.70**				

1. POWER OFF: Set "Voltage Range" and "FLD" switches to desired setting. Connect the voltage regulator as indicated in the diagram below.

2. POWER ON: Field lamp should blink and meter will indicate approximately the set point voltage indicated in the above table.

3. ADDITIONAL TEST:

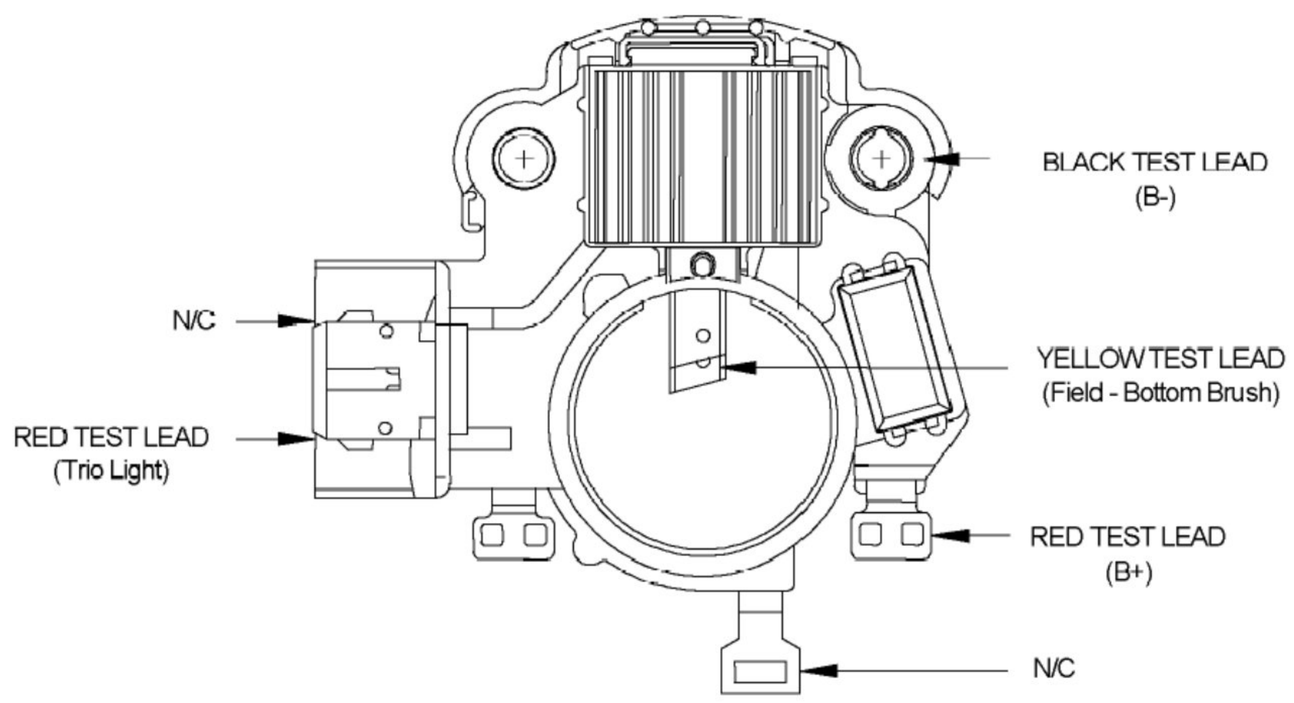

TRANSPO TESTER INSTRUCTIONS

for MITSUBISHI type regulators

PART NO.	FLD	VOLT	SET POINT	PART NO.	FLD	VOLT	SET POINT
IM848	**A**	**12**	**14.5**				

1. POWER OFF: Set "Voltage Range" and "FLD" switches to desired setting. Connect the voltage regulator as indicated in the diagram below.

2. POWER ON: Field lamp should blink and meter will indicate approximately the set point voltage indicated in the above table.

3. ADDITIONAL TEST: Remove sense lead and voltage rises to approximately 15.4 volts, reconnect sense lead. Remove white test lead from stator, 12 volt lamp comes on, voltage drops to 12 volts and field LED stays on (soft start). Remove Light lead field light and Lamp light turn off.

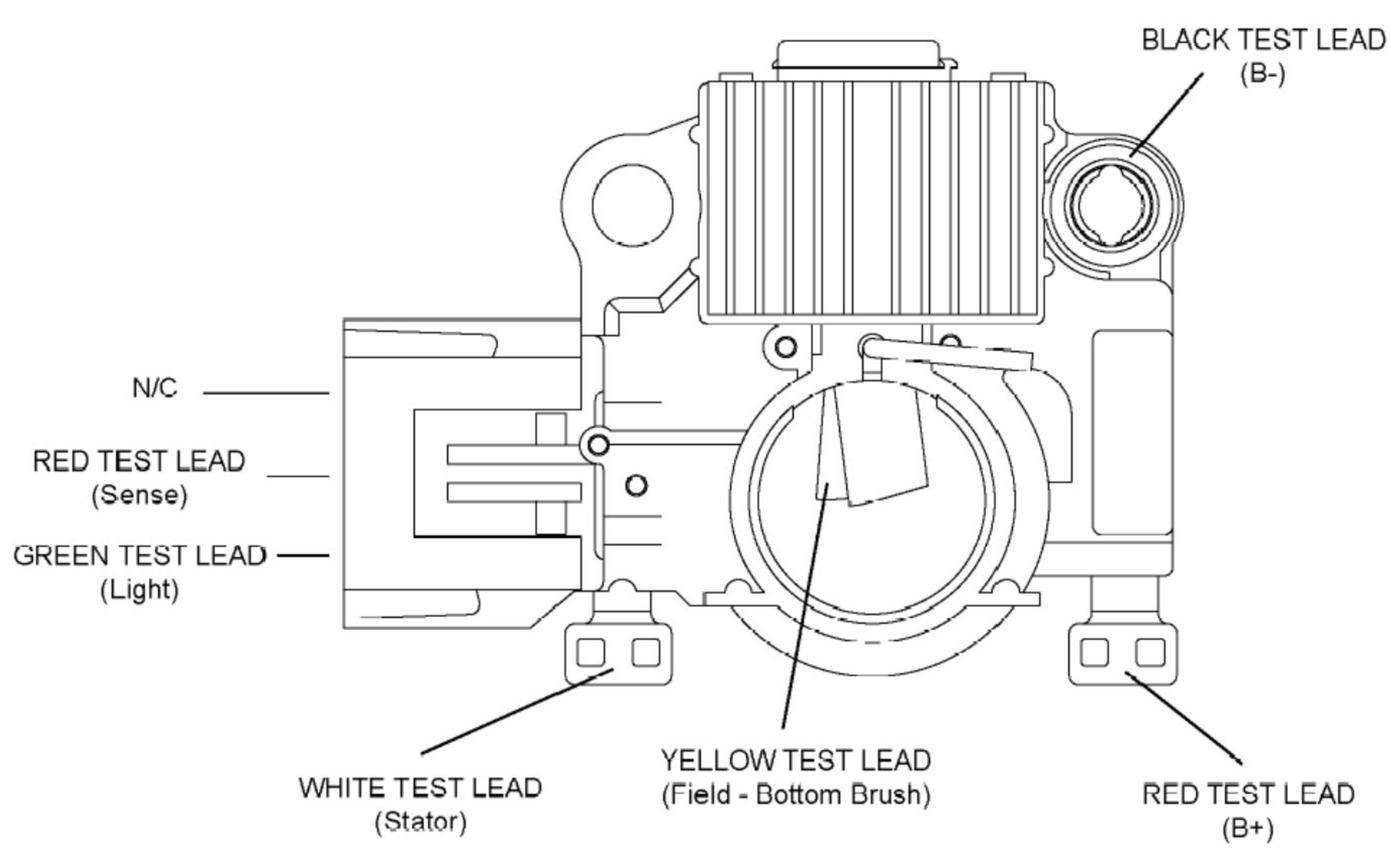

TRANSPO TESTER INSTRUCTIONS

for MITSUBISHI type regulators

PART NO.	FLD	VOLT	SET POINT	PART NO.	FLD	VOLT	SET POINT
IM350	**A**	**12**	**14.4**				

1. POWER OFF: Set "Voltage Range" and "FLD" switches to desired setting. Connect the voltage regulator as indicated in the diagram below.

2. POWER ON: Field lamp should blink and meter will indicate approximately the set point voltage indicated in the above table.

3. ADDITIONAL TEST: Remove sense lead and voltage rises to approximately 15.4 volts, reconnect sense lead. Remove white test lead from stator, 12 volt lamp comes on, voltage drops to 12 volts and field LED stays on (soft start).

Using VRC1000: To check for over Voltage, push the "Over Voltage" switch and the "Lamp Indicator" will turn on between 16.0V and 17.1V.

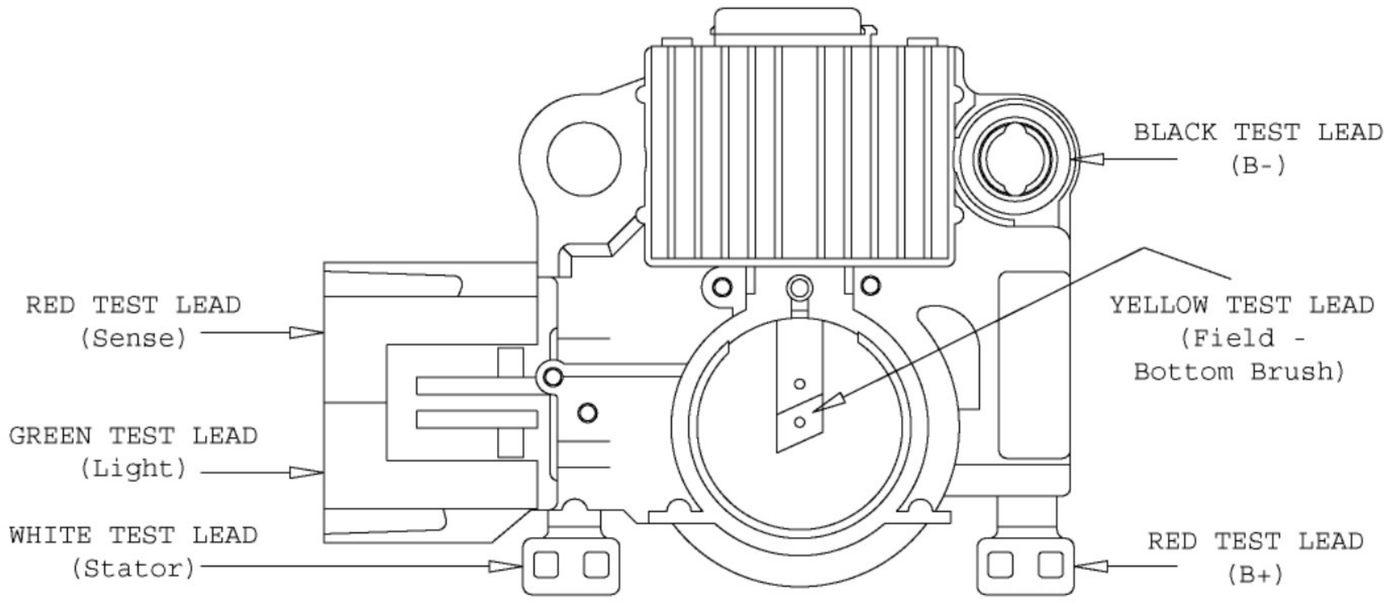

TRANSPO TESTER INSTRUCTIONS

for MITSUBISHI type regulators

PART NO.	FLD	VOLT	SET POINT	PART NO.	FLD	VOLT	SET POINT
IM341	**A**	**12**	**14.4**				

1. POWER OFF: Set "Voltage Range" and "FLD" switches to desired setting. Connect the voltage regulator as indicated in the diagram below.

2. POWER ON: Field lamp should blink and meter will indicate approximately the set point voltage indicated in the above table.

3. ADDITIONAL TEST: Remove sense lead and voltage rises to approximately 15.4 volts, reconnect sense lead. Connect Black test lead to "C" terminal and voltage drops to 13.1 volts. Remove white test lead from stator, 12 volt lamp comes on, voltage drops to 12 volts and field LED stays on (soft start). Remove Light lead field light and Lamp light turn off.

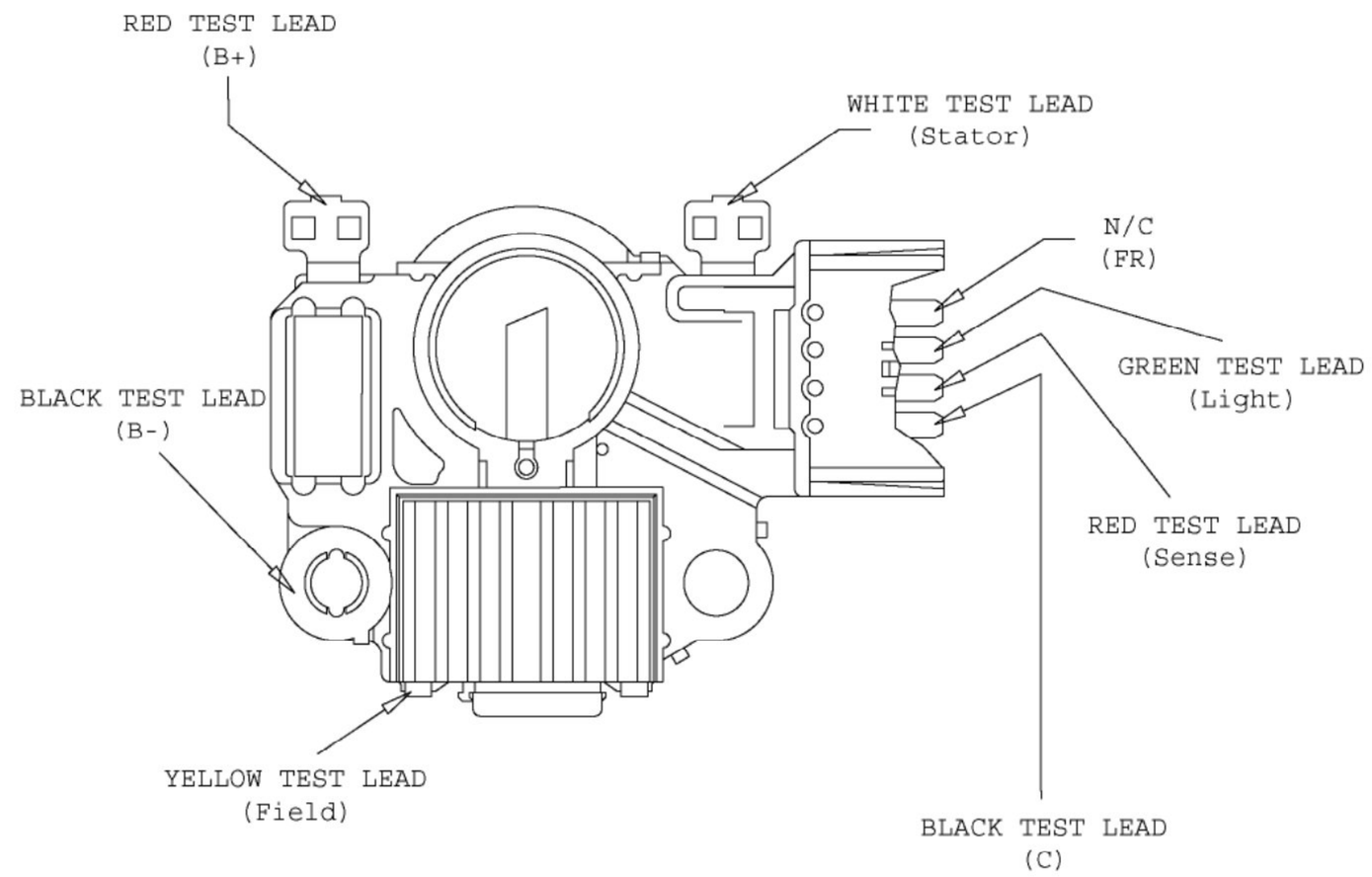

TRANSPO TESTER INSTRUCTIONS

for MITSUBISHI type regulators

PART NO.	FLD	VOLT	SET POINT	PART NO.	FLD	VOLT	SET POINT
IM358	**A**	**12**	**14.4**				

1. POWER OFF: Set "Voltage Range" and "FLD" switches to desired setting. Connect the voltage regulator as indicated in the diagram below.

2. POWER ON: Field lamp should blink and meter will indicate approximately the set point voltage indicated in the above table.

3. ADDITIONAL TEST: No additional test required.

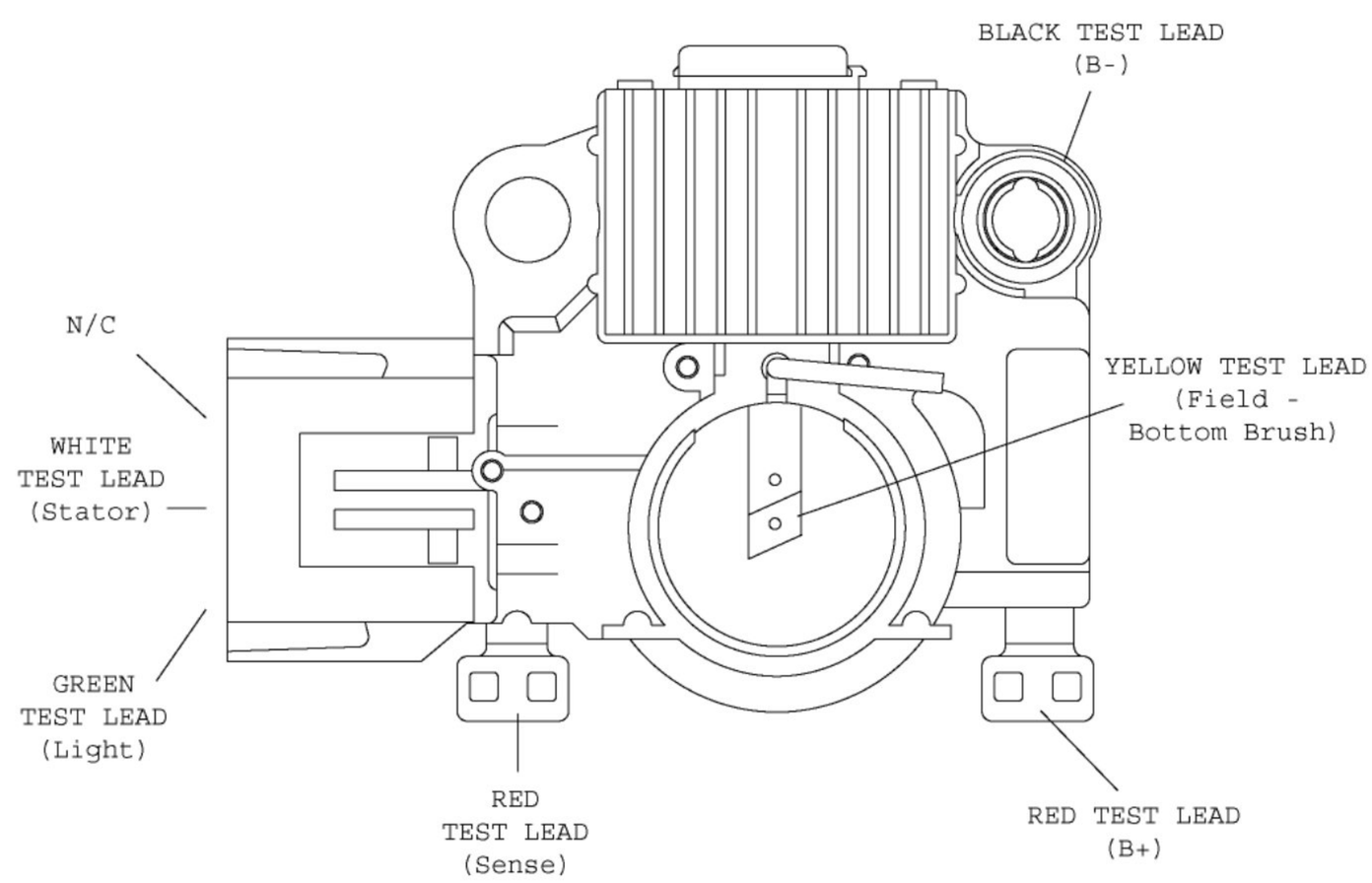

TRANSPO TESTER INSTRUCTIONS

for MITSUBISHI type regulators

PART NO.	FLD	VOLT	SET POINT	PART NO.	FLD	VOLT	SET POINT
IM853	**A**	**12**	**14.5**				

1. POWER OFF: Set "Voltage Range" and "FLD" switches to desired setting. Connect the voltage regulator as indicated in the diagram below.

2. POWER ON: Field lamp should blink and meter will indicate approximately the set point voltage indicated in the above table.

3. ADDITIONAL TEST: Remove white test lead from terminal marked “Stator” field, lamp light comes on and Voltage will incate 12 Volts. Remove green test lead from terminal marked “Lamp” and lamp light goes off. Remove red test lead from terminal marked “Ignition” and the field light goes off.

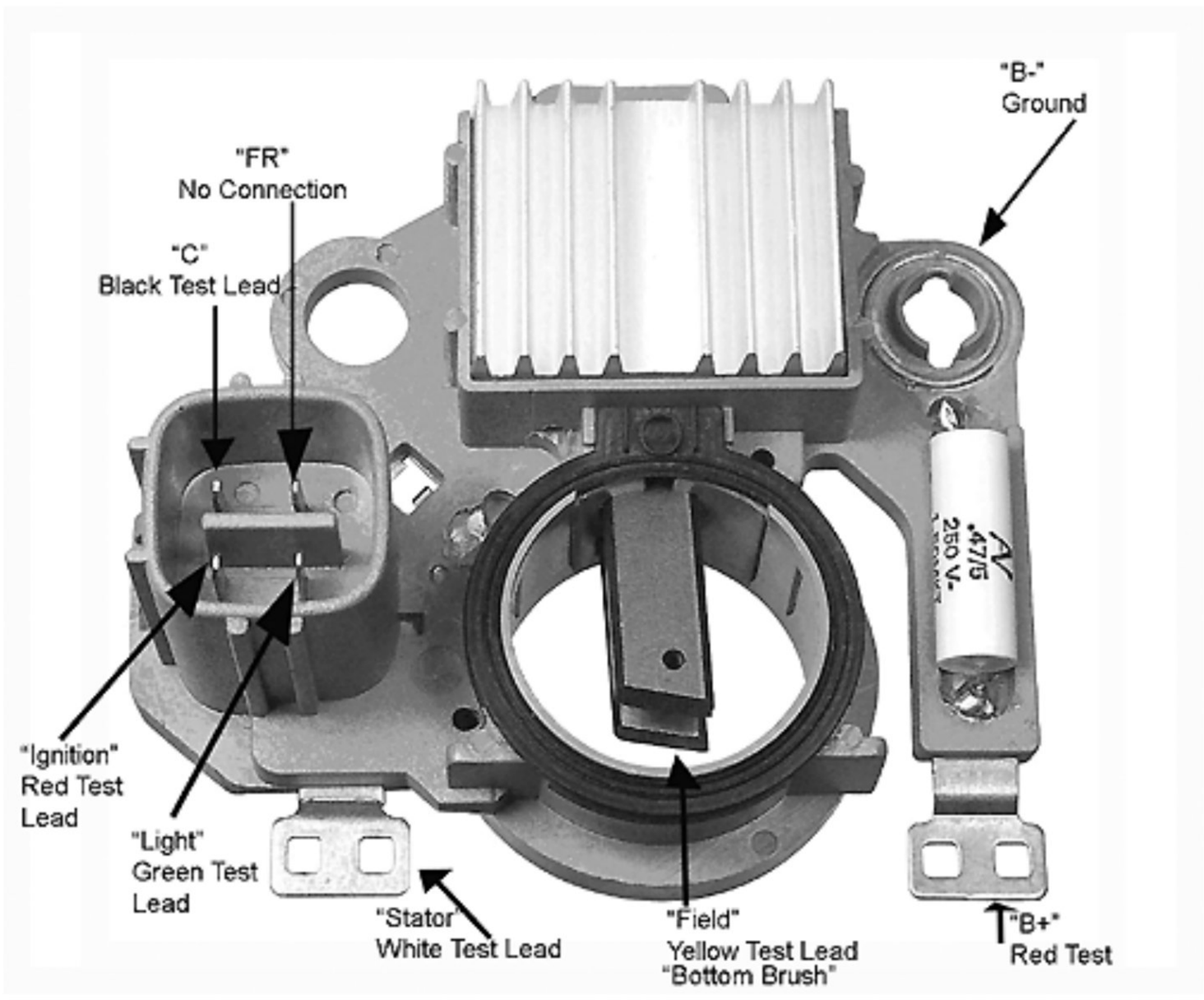

TRANSPO TESTER INSTRUCTIONS

for MITSUBISHI type regulators

PART NO.	FLD	VOLT	SET POINT	PART NO.	FLD	VOLT	SET POINT
IM465	**A**	**12**	**14.3**				

1. POWER OFF: Set "Voltage Range" and "FLD" switches to desired setting. Connect the voltage regulator as indicated in the diagram below.

2. POWER ON: Field lamp should blink and meter will indicate approximately the set point voltage indicated in the above table.

3. ADDITIONAL TEST:

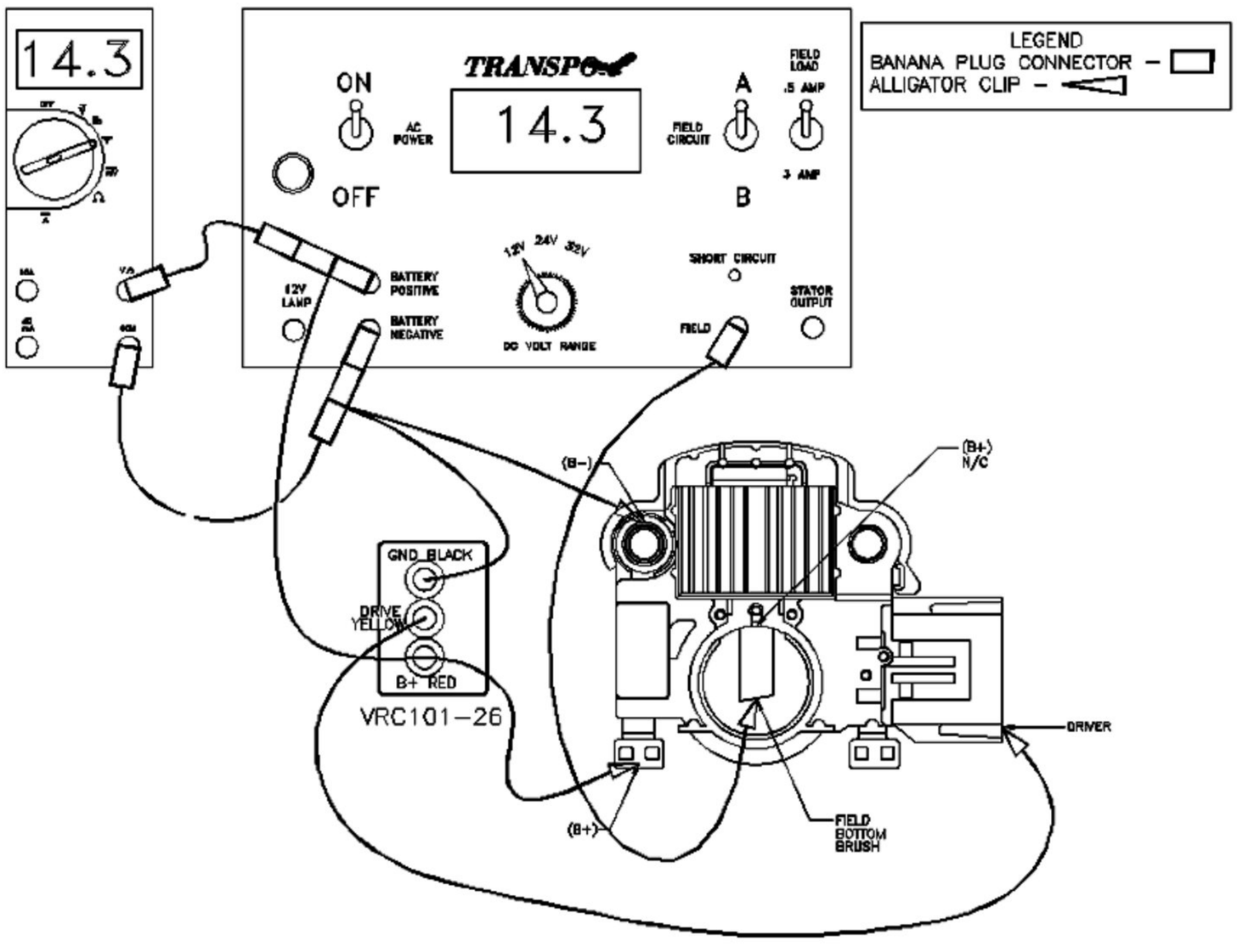

TRANSPO TESTER INSTRUCTIONS

for MITSUBISHI type regulators

PART NO.	FLD	VOLT	SET POINT	PART NO.	FLD	VOLT	SET POINT
IM846	**A**	**24**	**28.4**				

1. POWER OFF: Set "Voltage Range" and "FLD" switches to desired setting. Connect the voltage regulator as indicated in the diagram below.

2. POWER ON: Field lamp should blink and meter will indicate approximately the set point voltage indicated in the above table.

3. ADDITIONAL TEST:

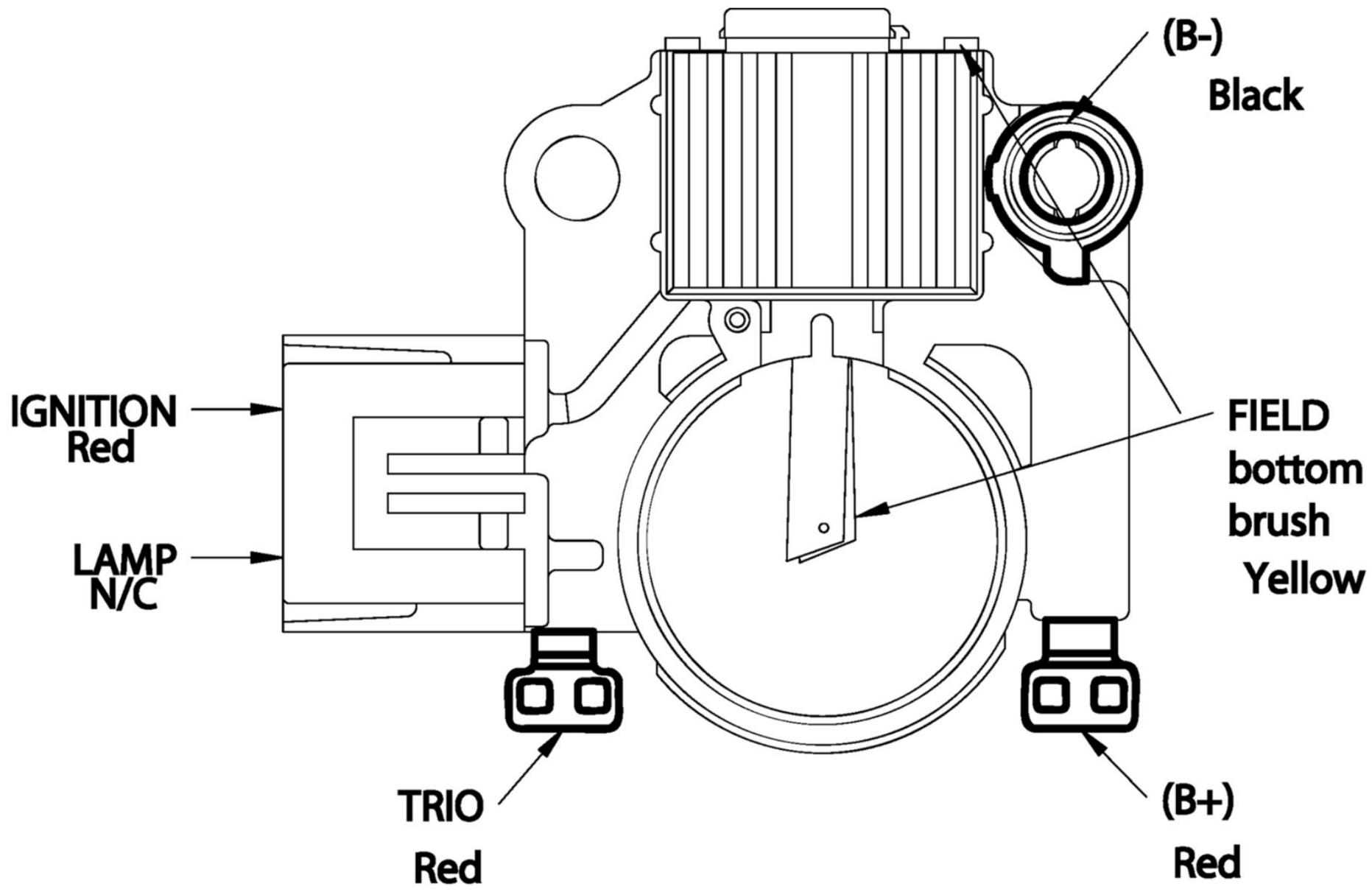

TRANSPO TESTER INSTRUCTIONS

for MOTOROLA type regulators

PART NO.	FLD	VOLT	SET POINT	PART NO.	FLD	VOLT	SET POINT
M5-61A	**B**	**24**	**28.0**	**M5-136A**	**B**	**12**	**14.2**
M5-74A	**B**	**32**	**39.2**	**M5-147A**	**B**	**12**	**15.00**
M5-79A	**B**	**12**	**14.2**	**M5-148A**	**B**	**24**	**28.0**
M5-94A	**B**	**32**	**38.4**	**M5-154A**	**B**	**12**	**14.2**

1. POWER OFF: Set "Voltage Range" and "FLD" switches to desired setting. Connect the voltage regulator as indicated in the diagram below.

2. POWER ON: Field lamp should blink and meter will indicate approximately the set point voltage indicated in the above table.

3. ADDITIONAL TEST:

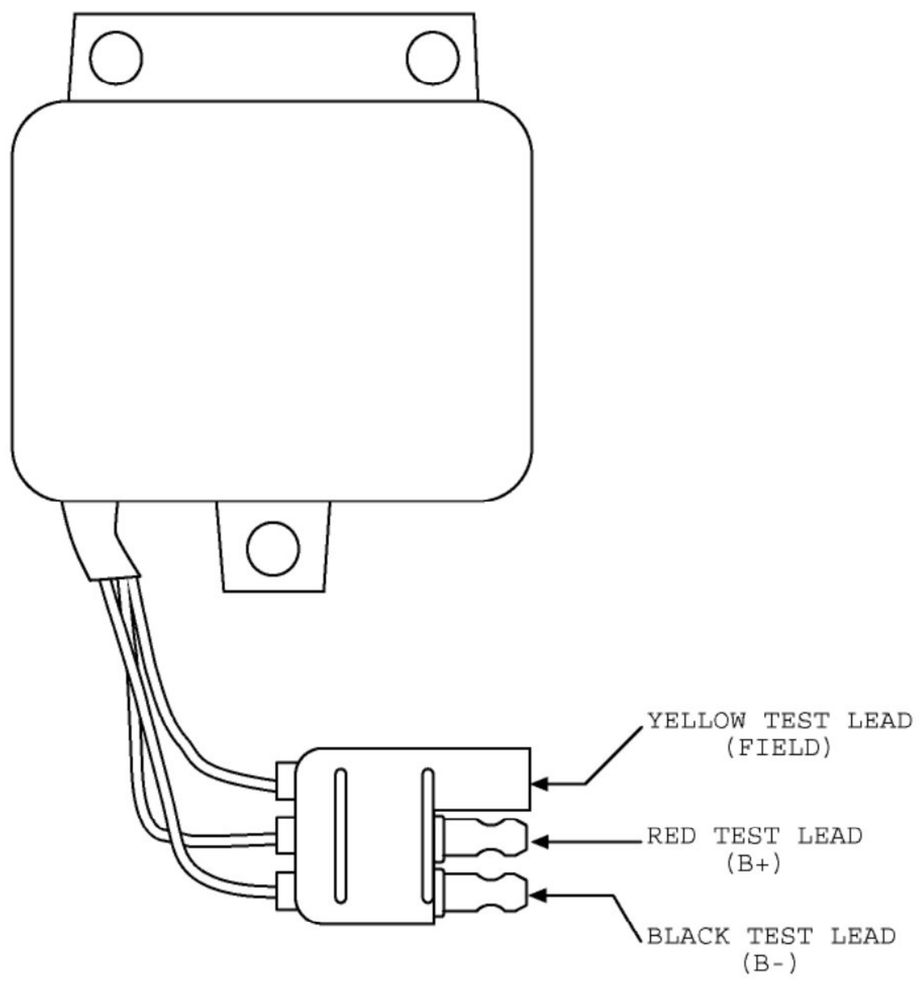

TRANSPO TESTER INSTRUCTIONS

for MOTOROLA type regulators

PART NO.	FLD	VOLT	SET POINT	PART NO.	FLD	VOLT	SET POINT
M5-61A	**B**	**24**	**28.0**	**M5-136A**	**B**	**12**	**14.2**
M5-74A	**B**	**32**	**39.2**	**M5-147A**	**B**	**12**	**15.00**
M5-79A	**B**	**12**	**14.2**	**M5-148A**	**B**	**24**	**28.0**
M5-94A	**B**	**32**	**38.4**	**M5-154A**	**B**	**12**	**14.2**

1. POWER OFF: Set "Voltage Range" and "FLD" switches to desired setting. Connect the voltage regulator as indicated in the diagram below.

2. POWER ON: Field lamp should blink and meter will indicate approximately the set point voltage indicated in the above table.

3. ADDITIONAL TEST:

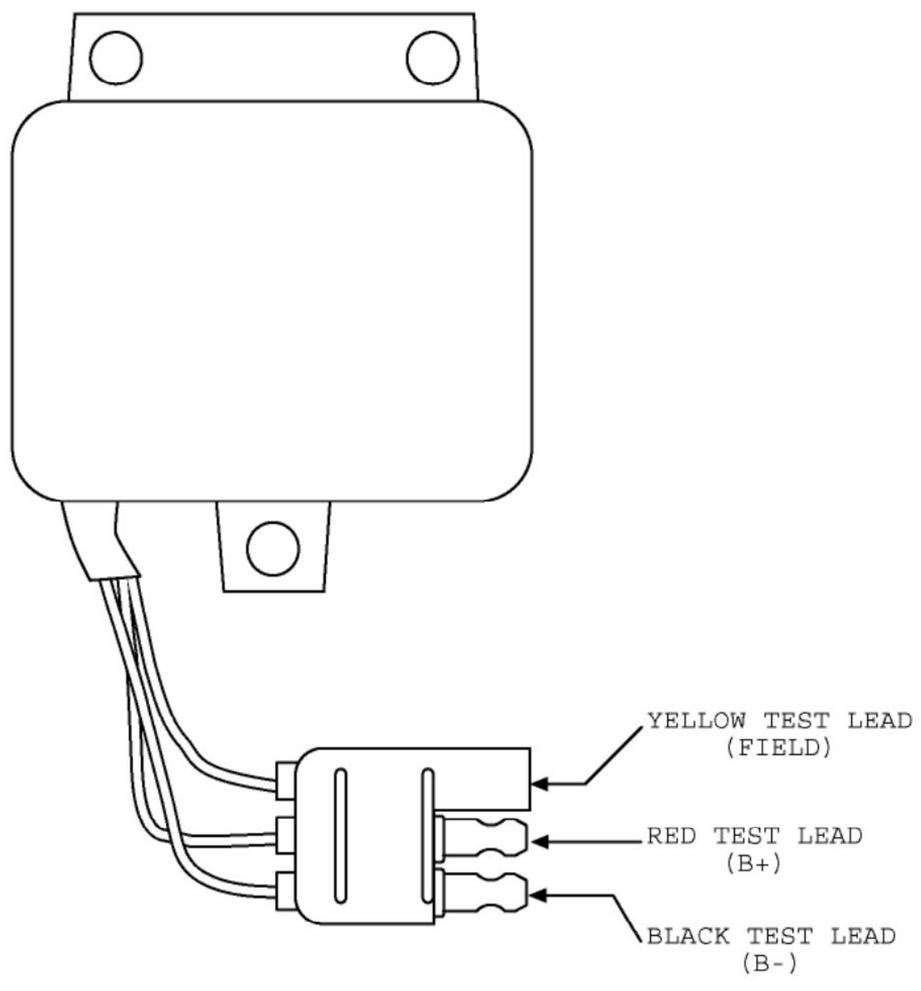

TRANSPO TESTER INSTRUCTIONS

for MOTOROLA type regulators

PART NO.	FLD	VOLT	SET POINT	PART NO.	FLD	VOLT	SET POINT
M5-156A	**B**	**12**	**14.2**	**M5-177A**	**B**	**24**	**28.0**
M5-157A	**B**	**24**	**29.2**	**M5-191A**	**B**	**12**	**14.2**
M5-161A	**B**	**24**	**28.4**	**M5-211A**	**B**	**12**	**14.2**
M5-163A	**B**	**24**	**28.0**	**M5-232A**	**B**	**12**	**14.4**

1. POWER OFF: Set "Voltage Range" and "FLD" switches to desired setting. Connect the voltage regulator as indicated in the diagram below.

2. POWER ON: Field lamp should blink and meter will indicate approximately the set point voltage indicated in the above table.

3. ADDITIONAL TEST:

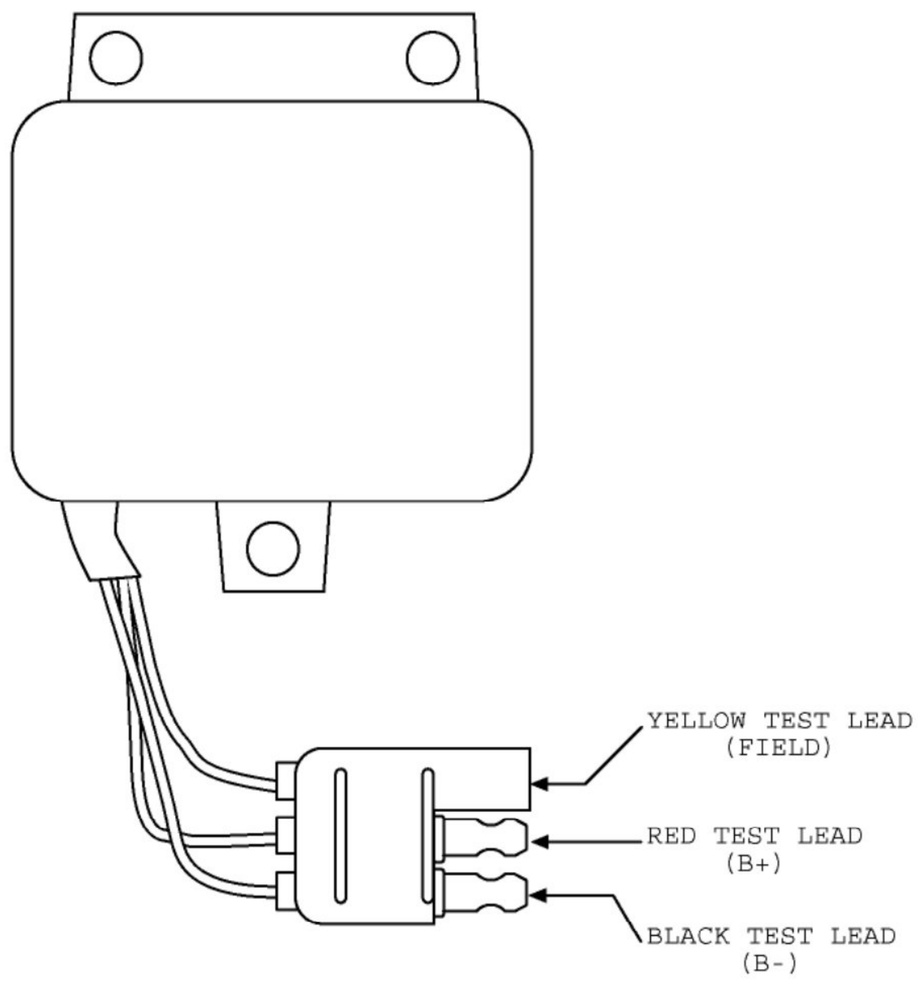

TRANSPO TESTER INSTRUCTIONS

for MOTOROLA type regulators

PART NO.	FLD	VOLT	SET POINT	PART NO.	FLD	VOLT	SET POINT
M5-239A	**B**	**12**	**13.8**				
M5-274A	**B**	**36**	**38.4**				

1. POWER OFF: Set "Voltage Range" and "FLD" switches to desired setting. Connect the voltage regulator as indicated in the diagram below.

2. POWER ON: Field lamp should blink and meter will indicate approximately the set point voltage indicated in the above table.

3. ADDITIONAL TEST:

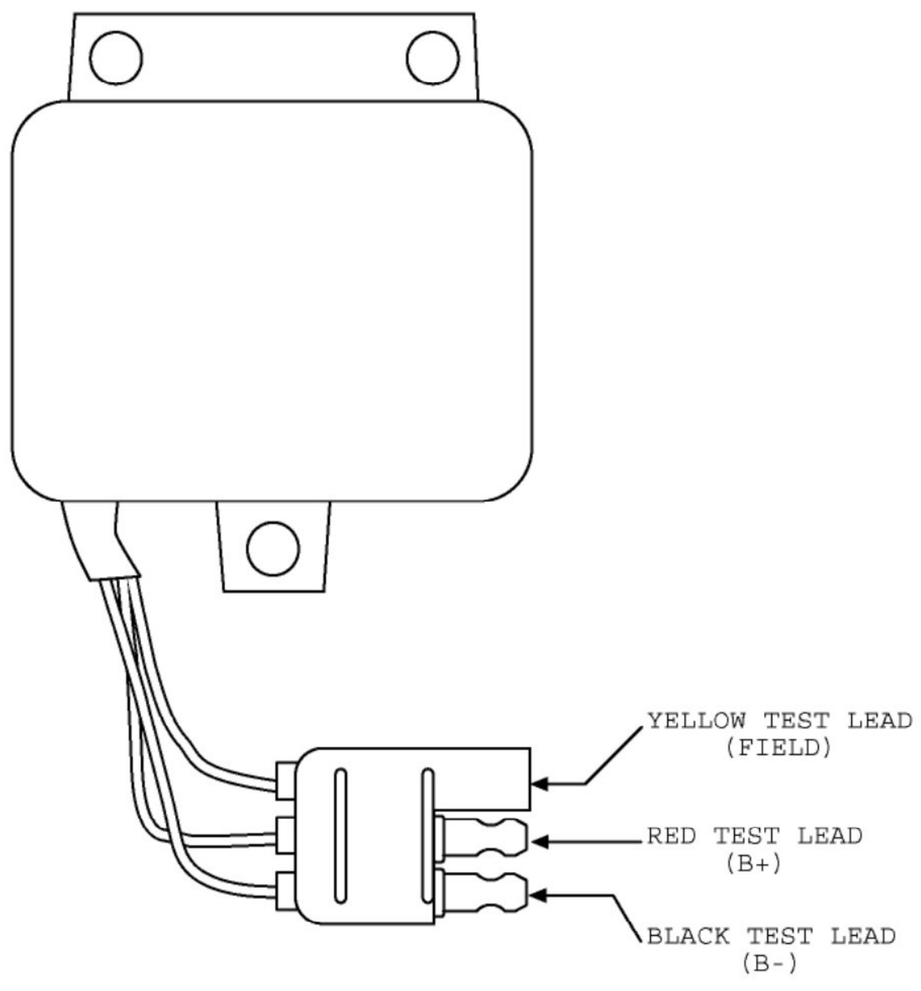

TRANSPO TESTER INSTRUCTIONS

for MOTOROLA type regulators

PART NO.	FLD	VOLT	SET POINT	PART NO.	FLD	VOLT	SET POINT
M5-28A	**B**	**12**	**15.2**	**M5-130A**	**B**	**12**	**15.2**
M5-30A	**B**	**12**	**15.2**	**M5-135(A)**	**B**	**12**	**15.0**
M5-42A	**B**	**12**	**15.2**	**M5-130**	**B**	**12**	**15.2**
M5-50A	**B**	**12**	**14.5**	**M5-141A**	**B**	**12**	**14.2**

1. POWER OFF: Set "Voltage Range" and "FLD" switches to desired setting. Connect the voltage regulator as indicated in the diagram below.

2. POWER ON: Field lamp should blink and meter will indicate approximately the set point voltage indicated in the above table.

3. ADDITIONAL TEST:

NOTE: * Regulators with One (1) yellow wire: M5-30A, M5-42A, M5-130A, M5-135, M5-141A
** Regulators with Two (2) yellow wires: M5-28A, M5-50A

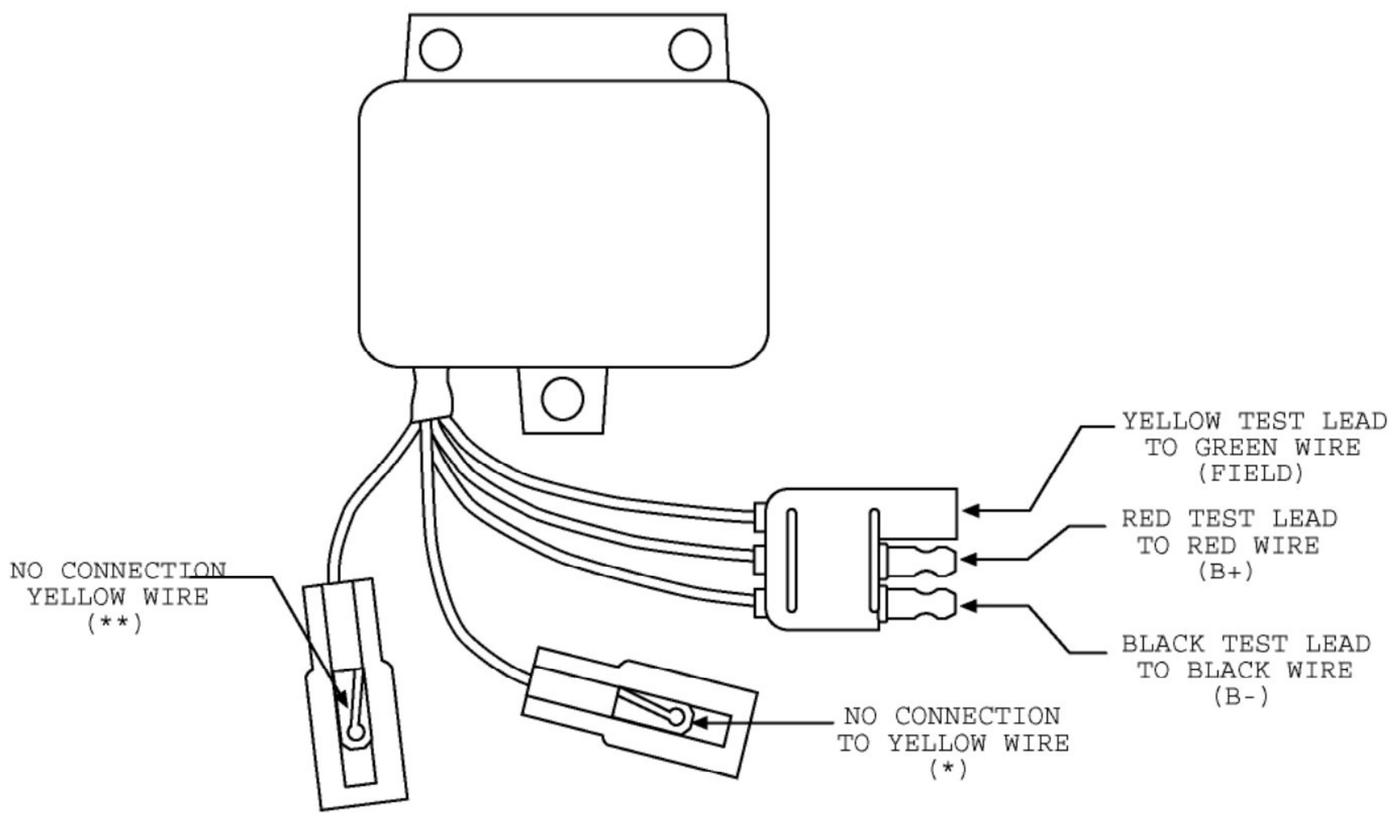

TRANSPO TESTER INSTRUCTIONS

for MOTOROLA type regulators

PART NO.	FLD	VOLT	SET POINT	PART NO.	FLD	VOLT	SET POINT
M5-143A	**B**	**12**	**14.2**	**M5-222A**	**B**	**12**	**15.3**
M5-150A	**B**	**12**	**14.2**	**M5-185A**	**B**	**24**	**29.2**
M5-206A	**B**	**12**	**15.3**				
M5-218A	**B**	**12**	**15.3**				

1. POWER OFF: Set "Voltage Range" and "FLD" switches to desired setting. Connect the voltage regulator as indicated in the diagram below.

2. POWER ON: Field lamp should blink and meter will indicate approximately the set point voltage indicated in the above table.

3. ADDITIONAL TEST:

NOTE: * Regulators with One (1) Yellow wire: M5-143A, M5-150A, M5-206A, M5-218A, M5-222A, M5-185A

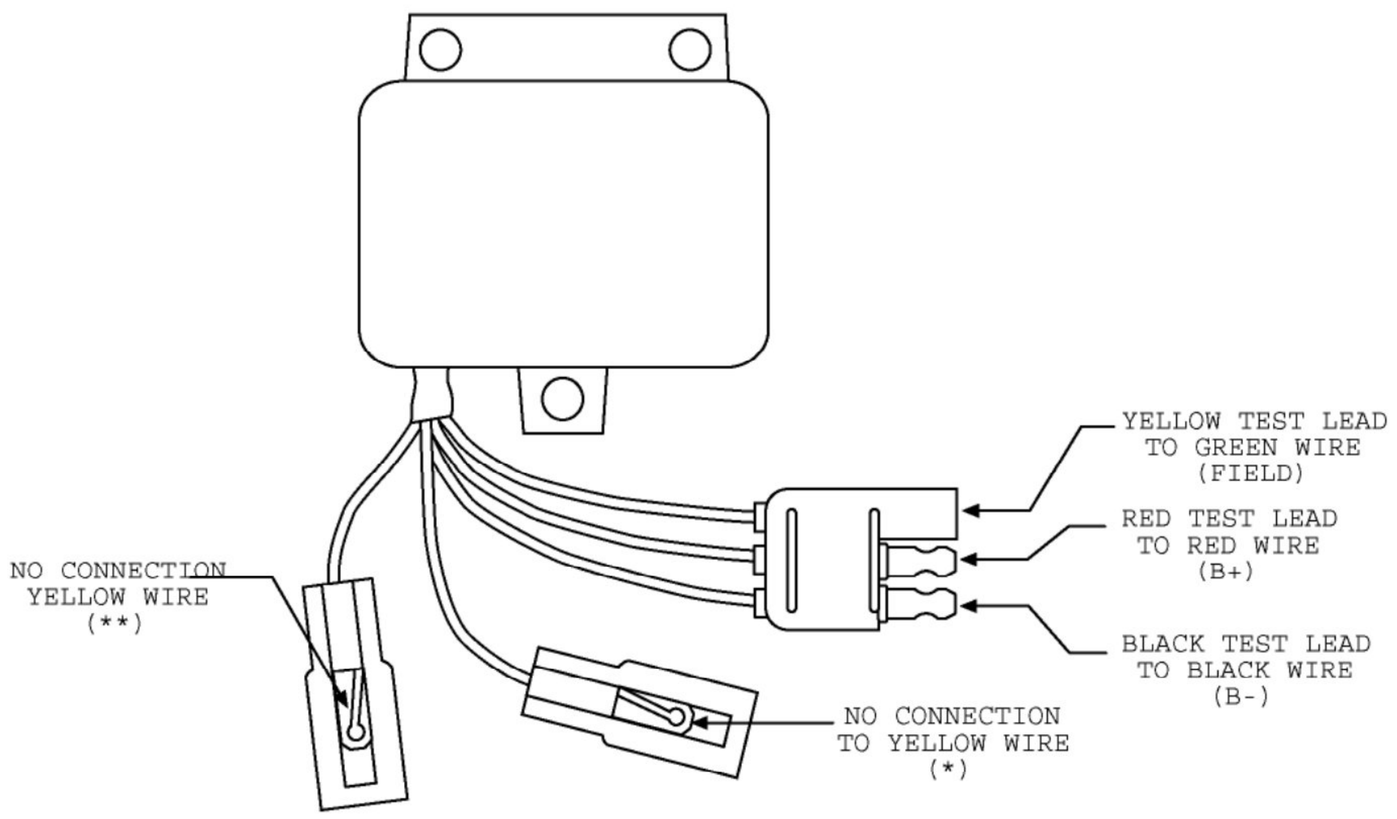

TRANSPO TESTER INSTRUCTIONS

for MOTOROLA type regulators

PART NO.	FLD	VOLT	SET POINT	PART NO.	FLD	VOLT	SET POINT
M5-35A	**B**	**12**	**15.2**				
M5-47A	**B**	**24**	**19.2**				

1. POWER OFF: Set "Voltage Range" and "FLD" switches to desired setting. Connect the voltage regulator as indicated in the diagram below.

2. POWER ON: Field lamp should blink and meter will indicate approximately the set point voltage indicated in the above table.

3. ADDITIONAL TEST:

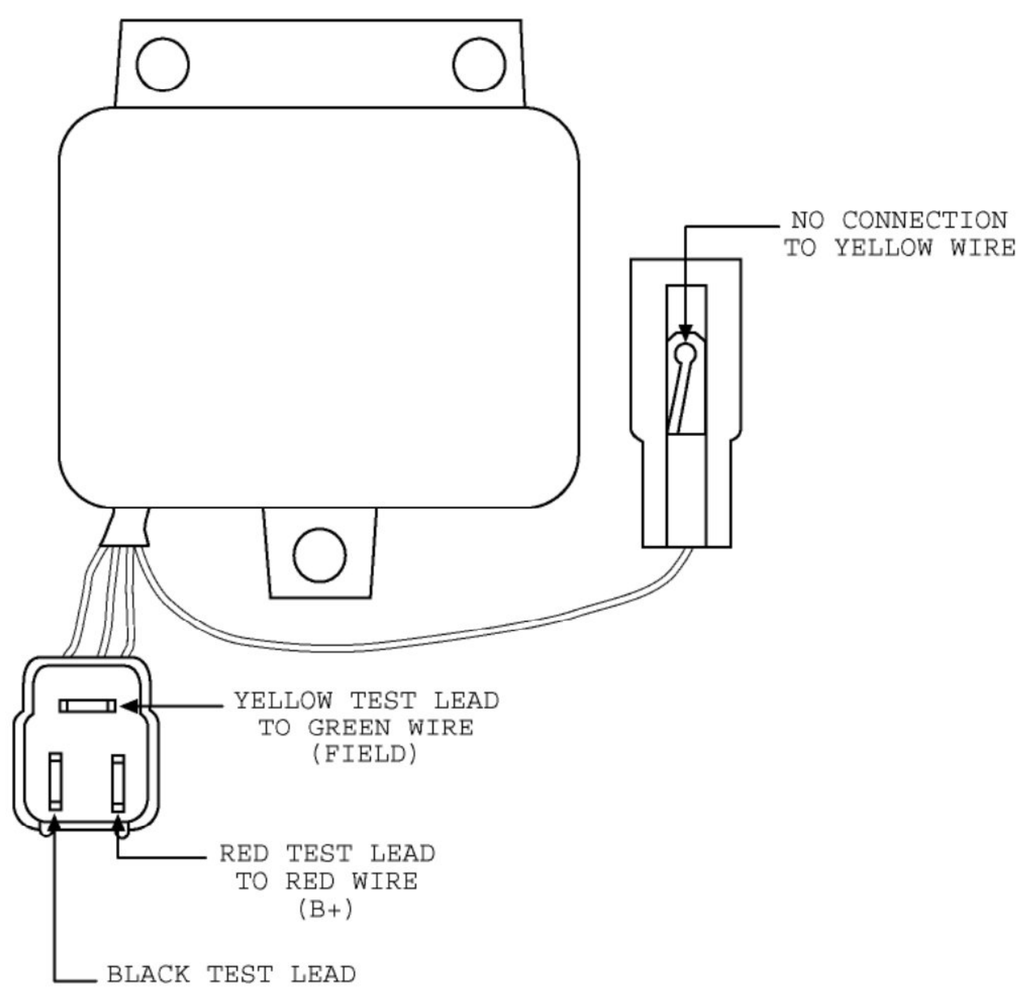

TRANSPO TESTER INSTRUCTIONS

for MOTOROLA type regulators

PART NO.	FLD	VOLT	SET POINT	PART NO.	FLD	VOLT	SET POINT
M5-137A	**B**	**12**	**15.2**				
M5-142A	**B**	**12**	**14.2**				
M5-184A	**B**	**24**	**29.2**				

1. POWER OFF: Set "Voltage Range" and "FLD" switches to desired setting. Connect the voltage regulator as indicated in the diagram below.

2. POWER ON: Field lamp should blink and meter will indicate approximately the set point voltage indicated in the above table.

3. ADDITIONAL TEST:

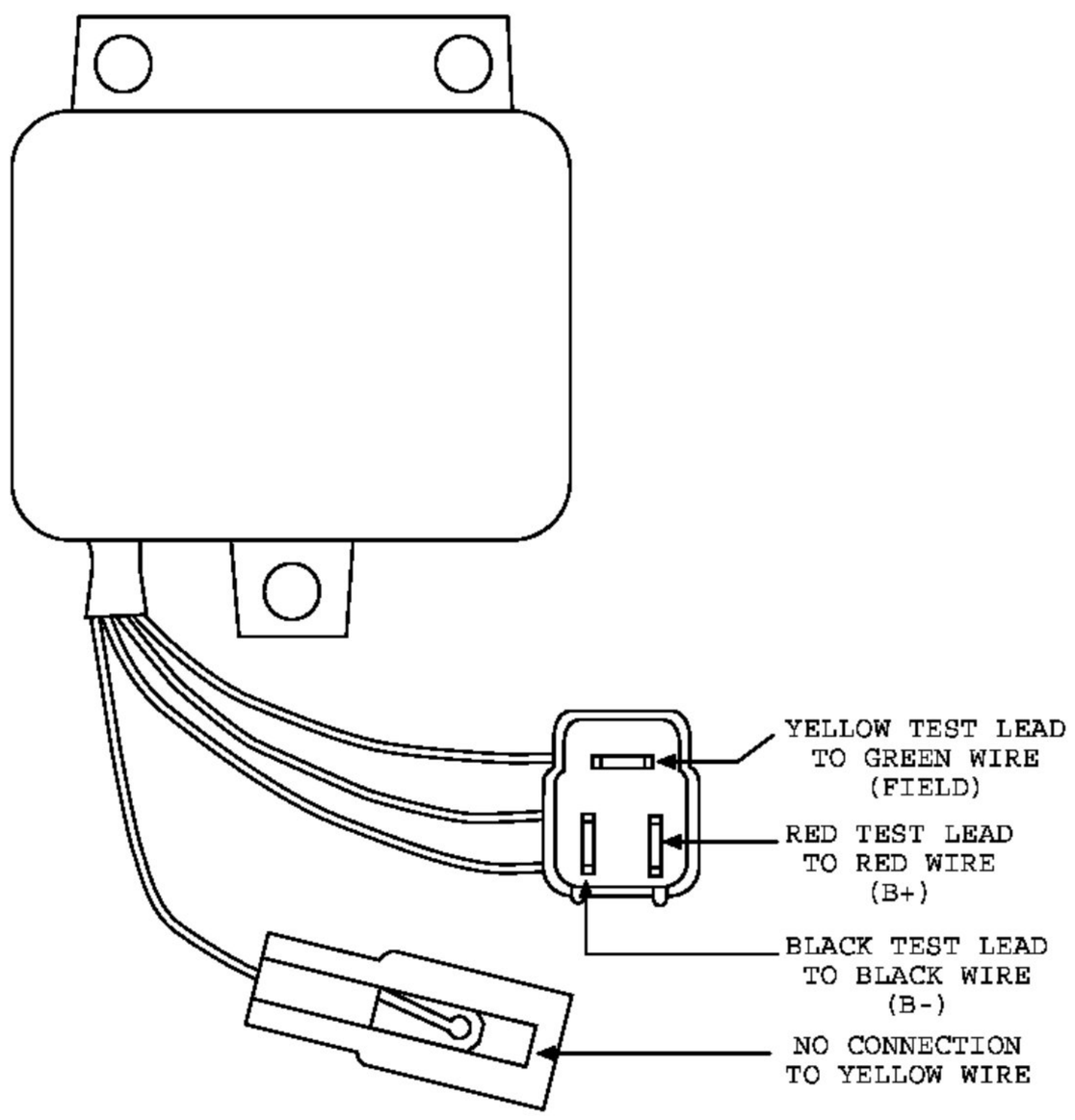

TRANSPO TESTER INSTRUCTIONS

for MOTOROLA type regulators

PART NO.	FLD	VOLT	SET POINT	PART NO.	FLD	VOLT	SET POINT
M5-113A	**B**	**12**	**14.2**				
M5-122A	**B**	**12**	**14.4**				
M5-216A	**B**	**12**	**14.2**				

1. POWER OFF: Set "Voltage Range" and "FLD" switches to desired setting. Connect the voltage regulator as indicated in the diagram below.

2. POWER ON: Field lamp should blink and meter will indicate approximately the set point voltage indicated in the above table.

3. ADDITIONAL TEST: Remove red test lead from yellow wire of the regulator. Indicator light should turn on and the meter will indicate the set point voltage.

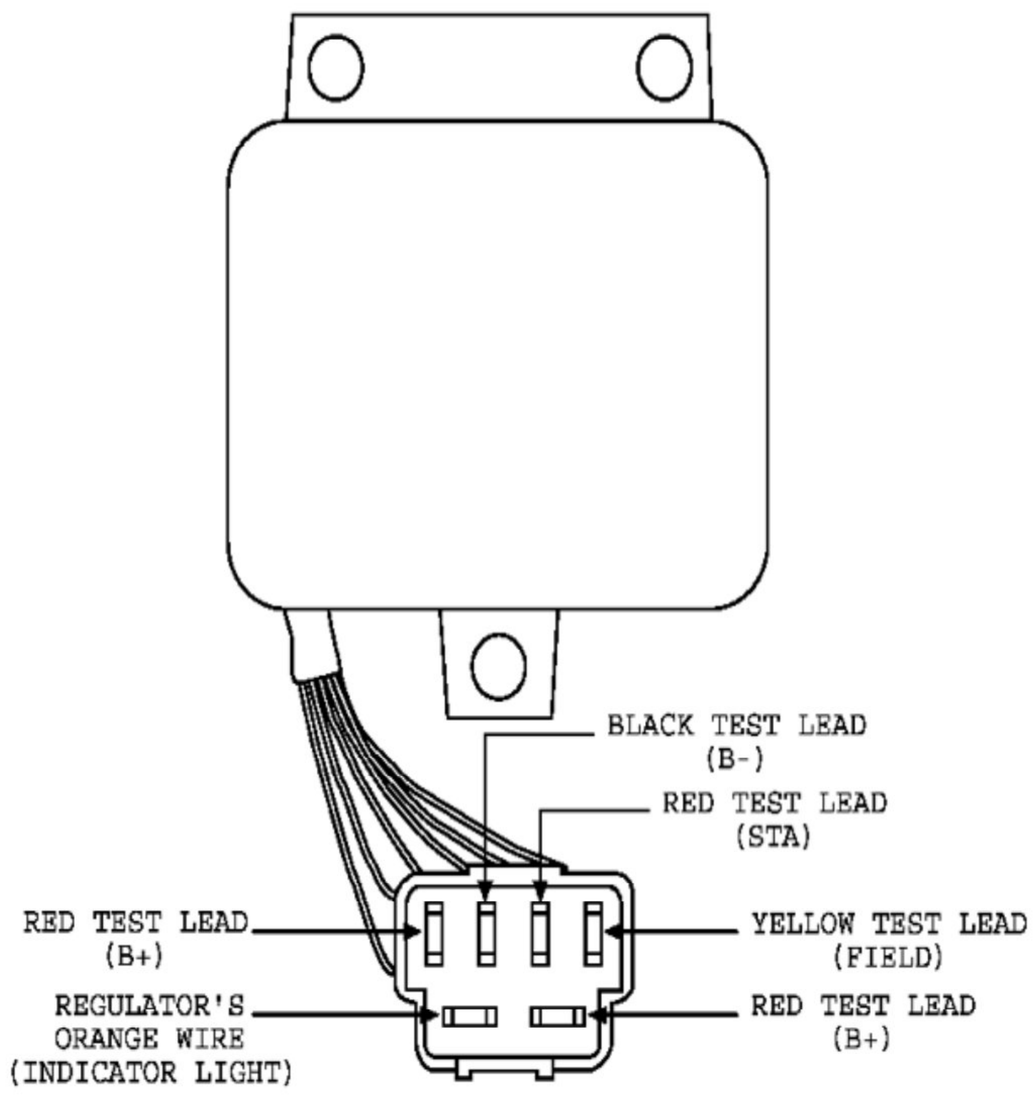

TRANSPO TESTER INSTRUCTIONS

for MOTOROLA type regulators

PART NO.	FLD	VOLT	SET POINT	PART NO.	FLD	VOLT	SET POINT
M5-204A	**B**	**12**	**14.2**				

1. POWER OFF: Set "Voltage Range" and "FLD" switches to desired setting. Connect the voltage regulator as indicated in the diagram below.

2. POWER ON: Field lamp should blink and meter will indicate approximately the set point voltage indicated in the above table.

3. ADDITIONAL TEST: Remove red test lead from terminal marked with "*". Field lamp should still blink and the meter will indicate approximately 15.3 v.

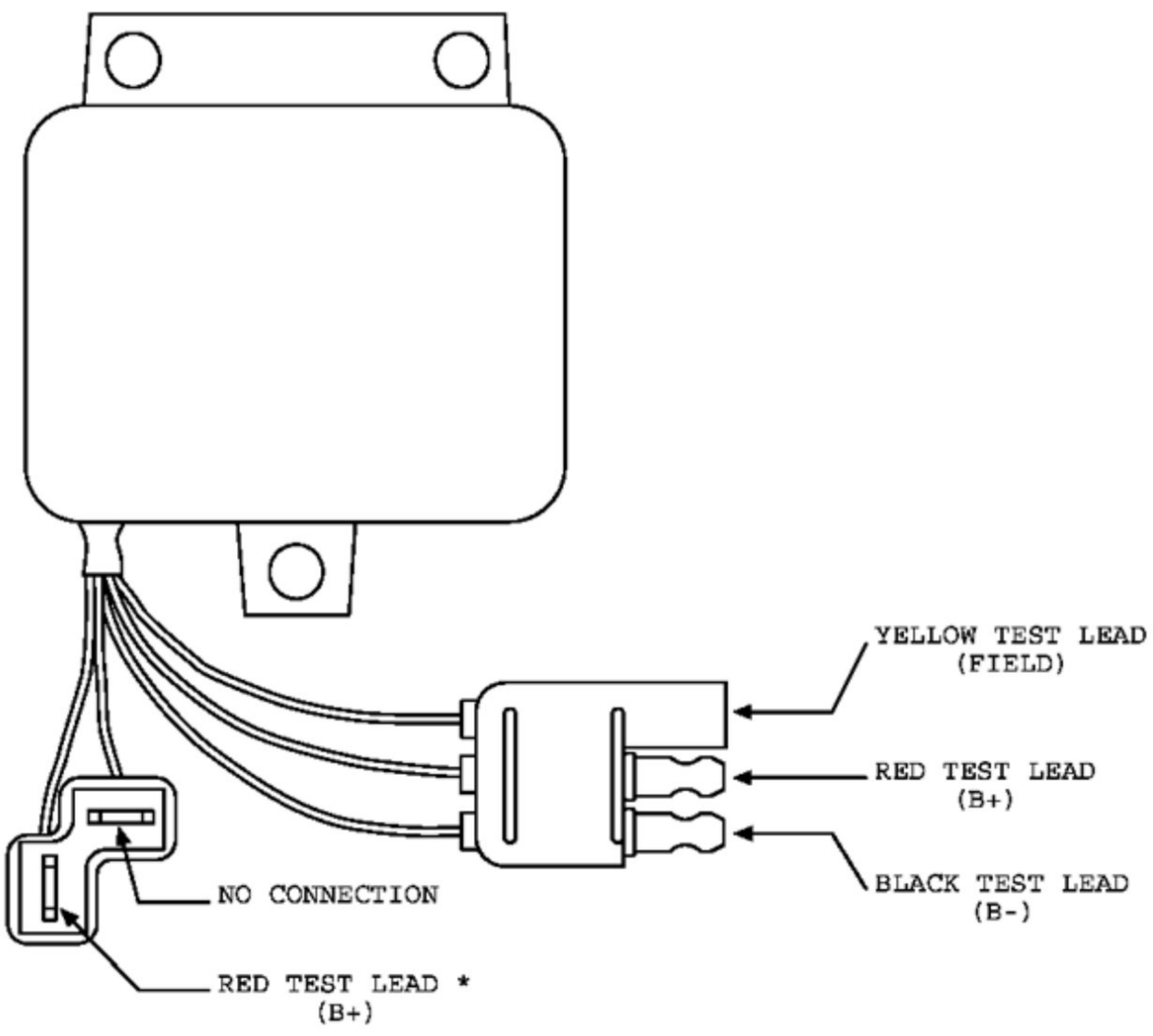

TRANSPO TESTER INSTRUCTIONS

for MOTOROLA type regulators

PART NO.	FLD	VOLT	SET POINT	PART NO.	FLD	VOLT	SET POINT
M5-24A	**B**	**12**	**15.2**	**M5-205A**	**B**	**12**	**14.1**
M5-138A	**B**	**12**	**15.2**	**M5-210A**	**B**	**12**	**14.2**
M5-173A	**B**	**12**	**14.1**	**M5-223A**	**B**	**12**	**13.8**
M5-174A	**B**	**12**	**14.1**	**M5-228A**	**B**	**12**	**14.1**

1. POWER OFF: Set "Voltage Range" and "FLD" switches to desired setting. Connect the voltage regulator as indicated in the diagram below.

2. POWER ON: Field lamp should blink and meter will indicate approximately the set point voltage indicated in the above table.

3. ADDITIONAL TEST:

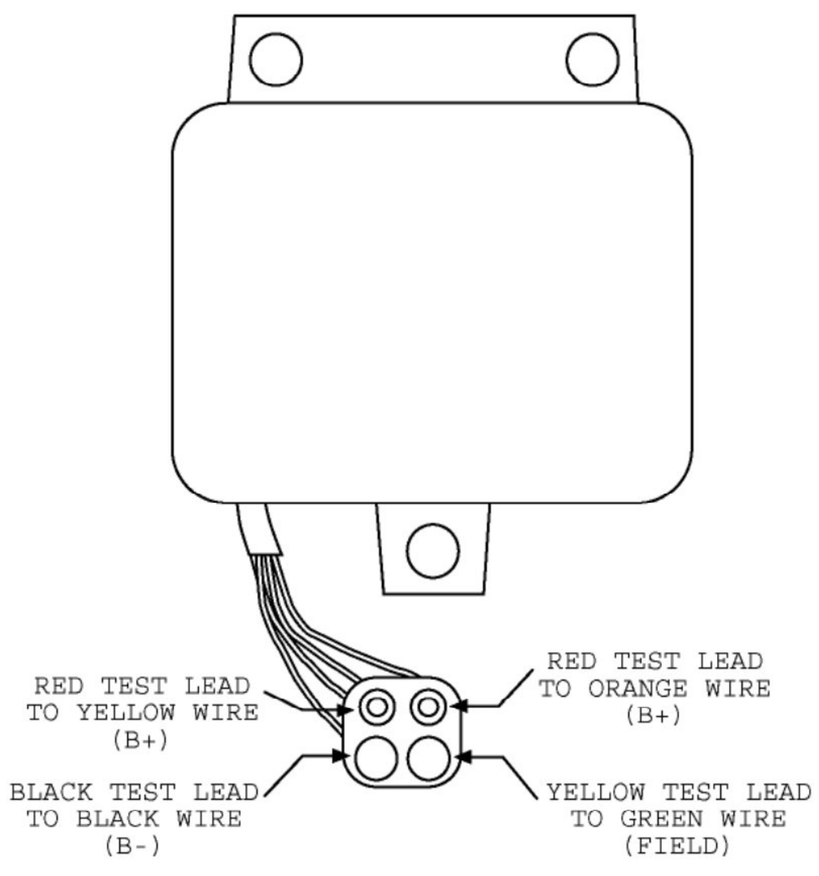

TRANSPO TESTER INSTRUCTIONS

for MOTOROLA type regulators

PART NO.	FLD	VOLT	SET POINT	PART NO.	FLD	VOLT	SET POINT
M5-230A	**B**	**12**	**14.1**				

1. POWER OFF: Set "Voltage Range" and "FLD" switches to desired setting. Connect the voltage regulator as indicated in the diagram below.

2. POWER ON: Field lamp should blink and meter will indicate approximately the set point voltage indicated in the above table.

3. ADDITIONAL TEST:

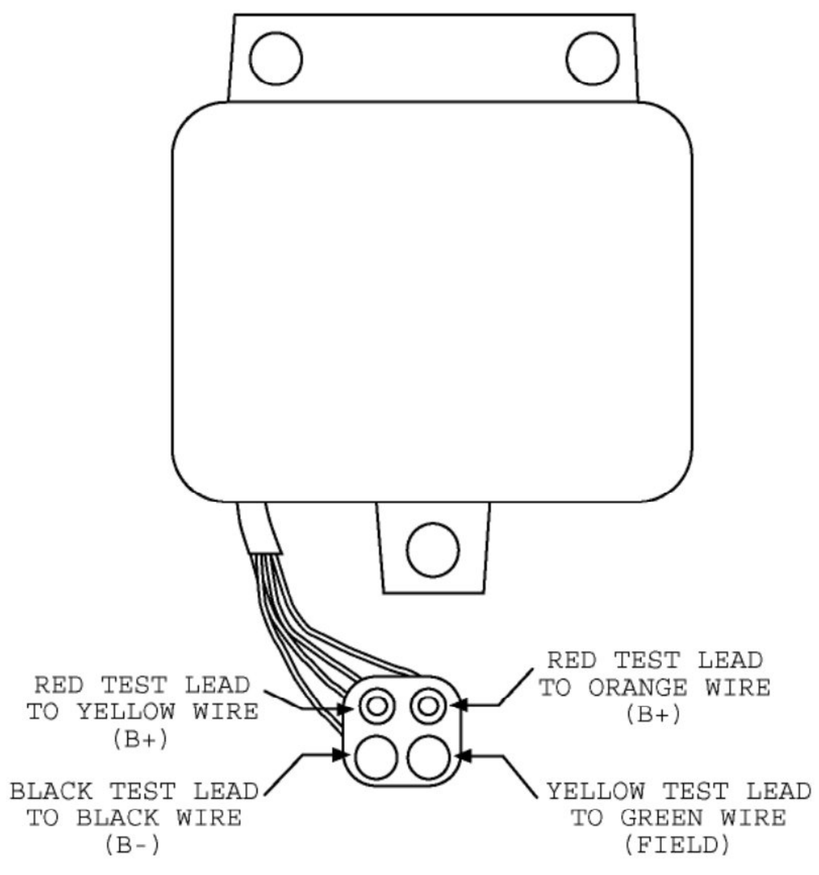

TRANSPO TESTER INSTRUCTIONS

for MOTOROLA type regulators

PART NO.	FLD	VOLT	SET POINT	PART NO.	FLD	VOLT	SET POINT
M5-196A	**B**	**12**	**14.2**				

1. POWER OFF: Set "Voltage Range" and "FLD" switches to desired setting. Connect the voltage regulator as indicated in the diagram below.

2. POWER ON: Field lamp should blink and meter will indicate approximately the set point voltage indicated in the above table.

3. ADDITIONAL TEST:

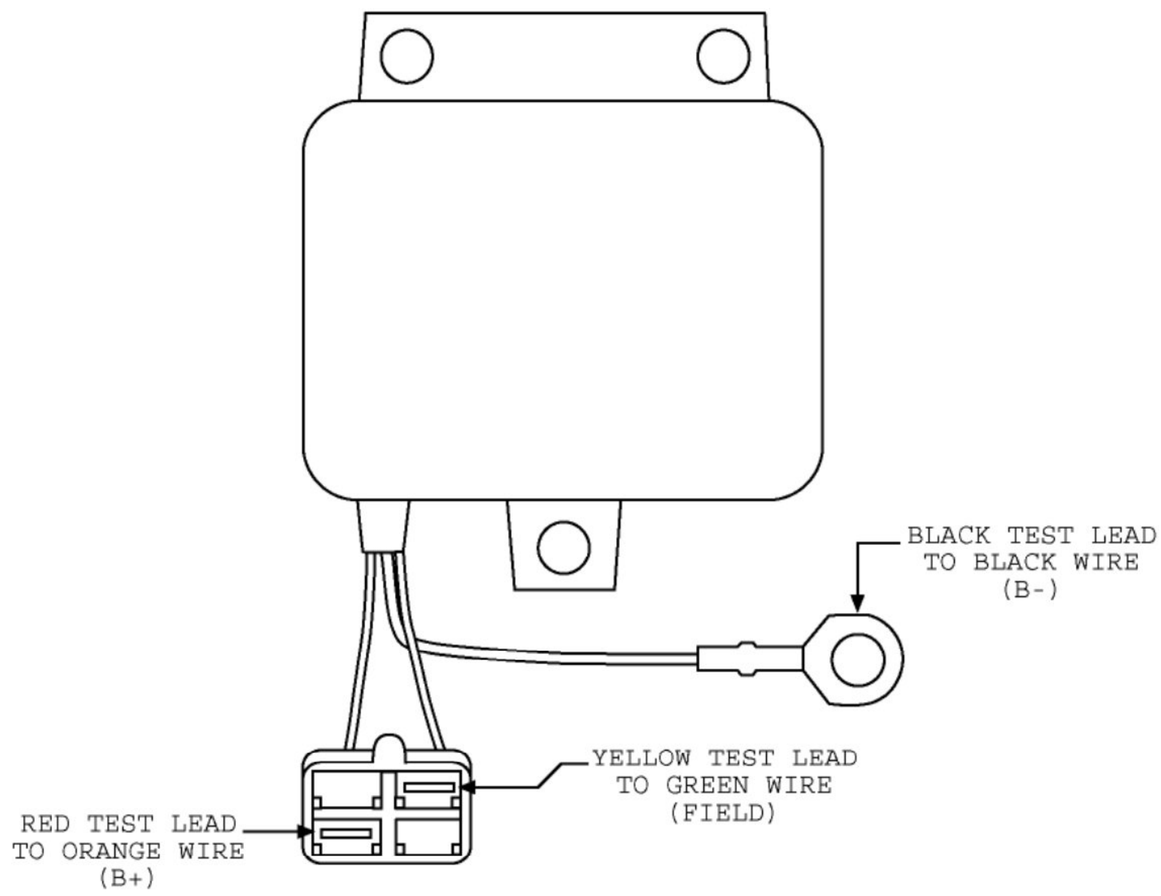

TRANSPO TESTER INSTRUCTIONS

for MOTOROLA type regulators

PART NO.	FLD	VOLT	SET POINT	PART NO.	FLD	VOLT	SET POINT
M5-159A	**B**	**24**	**29.2**				
M5-227A	**B**	**12**	**14.2**				

1. POWER OFF: Set "Voltage Range" and "FLD" switches to desired setting. Connect the voltage regulator as indicated in the diagram below.

2. POWER ON: Field lamp should blink and meter will indicate approximately the set point voltage indicated in the above table.

3. ADDITIONAL TEST:

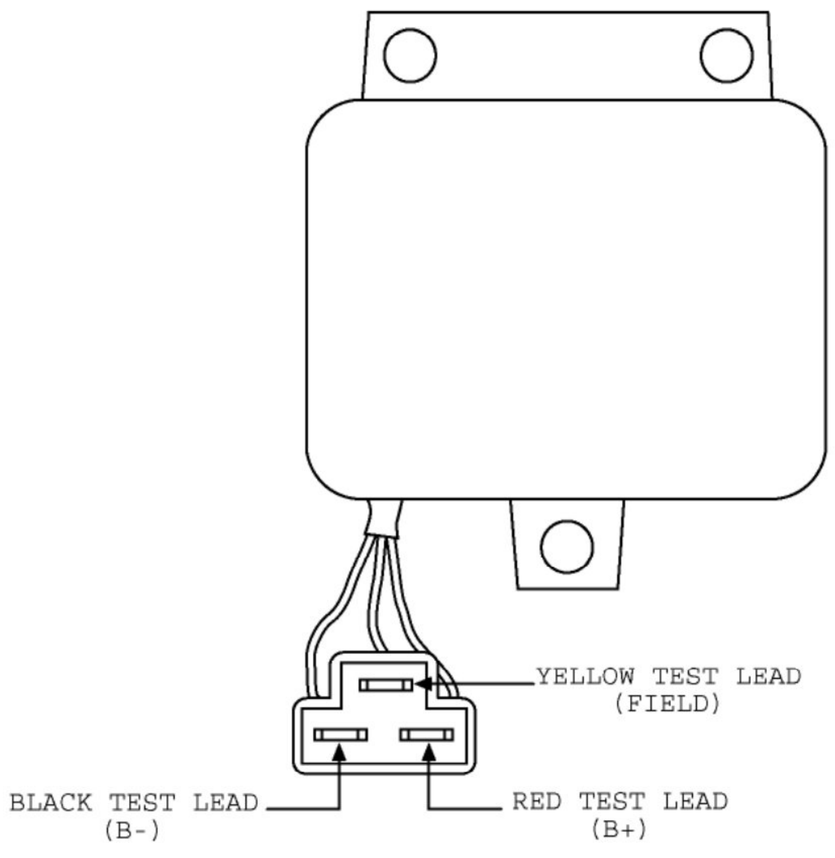

TRANSPO TESTER INSTRUCTIONS

for MOTOROLA type regulators

PART NO.	FLD	VOLT	SET POINT	PART NO.	FLD	VOLT	SET POINT
M5-33A	**B**	**12**	**15.2**	**M5-178A**	**B**	**12**	**15.2**
M5-44A	**B**	**12**	**15.2**				
M5-109A	**B**	**12**	**15.2**				
M5-140A	**B**	**12**	**15.2**				

1. POWER OFF: Set "Voltage Range" and "FLD" switches to desired setting. Connect the voltage regulator as indicated in the diagram below.

2. POWER ON: Field lamp should blink and meter will indicate approximately the set point voltage indicated in the above table.

3. ADDITIONAL TEST:

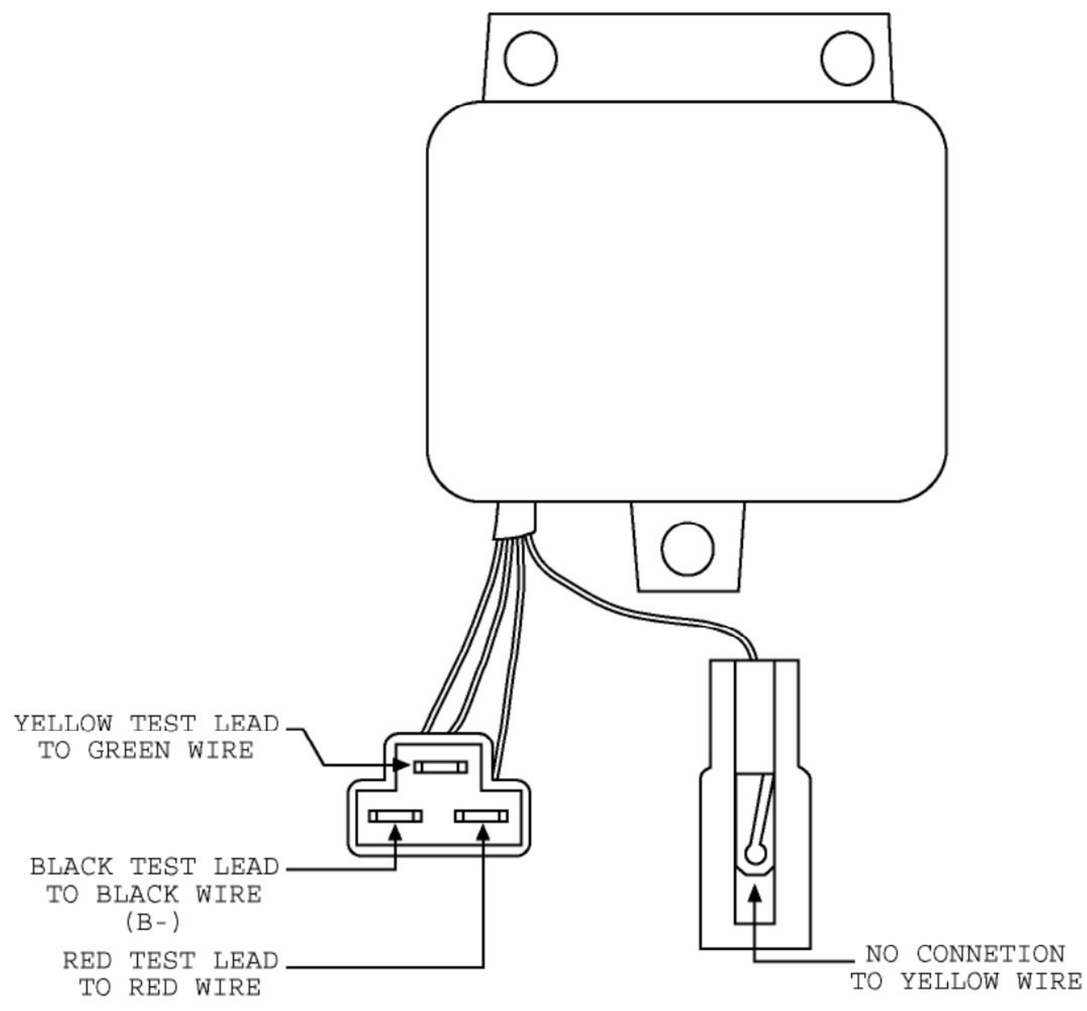

TRANSPO TESTER INSTRUCTIONS

for MOTOROLA type regulators

PART NO.	FLD	VOLT	SET POINT	PART NO.	FLD	VOLT	SET POINT
M5-25A	**B**	**12**	**15.2**				
M5-67A	**B**	**12**	**14.8**				
M5-139A	**B**	**12**	**15.2**				

1. POWER OFF: Set "Voltage Range" and "FLD" switches to desired setting. Connect the voltage regulator as indicated in the diagram below.

2. POWER ON: Field lamp should blink and meter will indicate approximately the set point voltage indicated in the above table.

3. ADDITIONAL TEST:

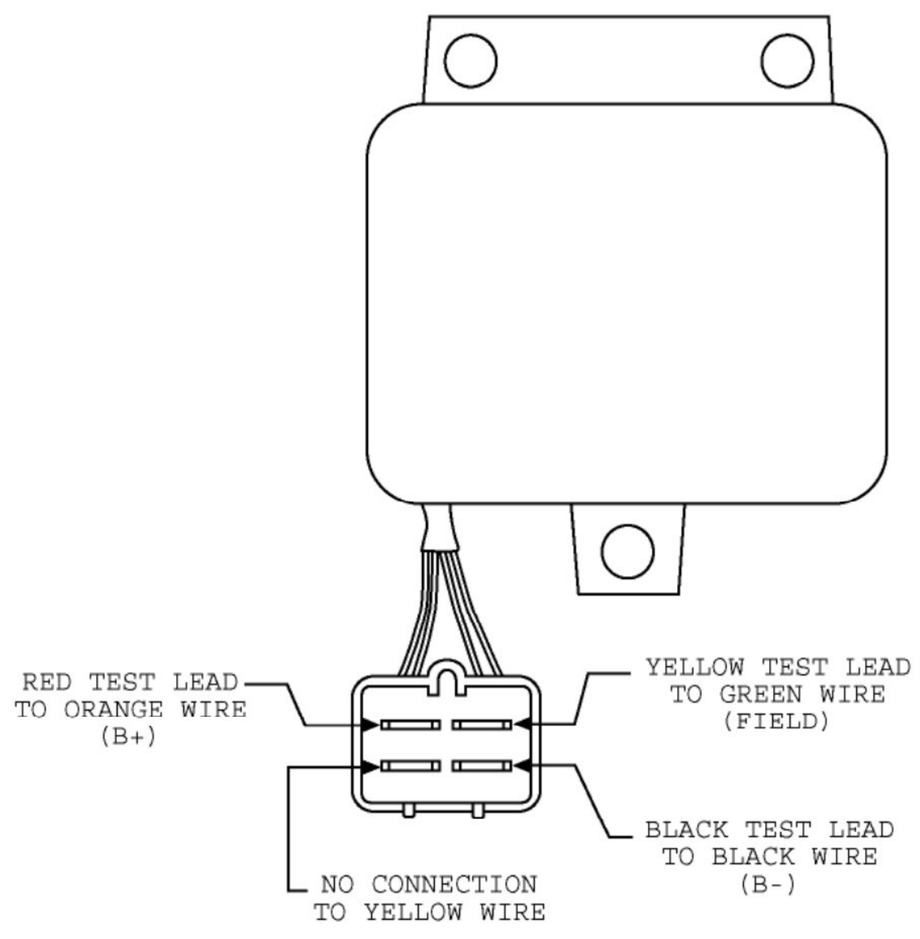

TRANSPO TESTER INSTRUCTIONS

for MOTOROLA type regulators

PART NO.	FLD	VOLT	SET POINT	PART NO.	FLD	VOLT	SET POINT
M5-146	**B**	**12**	**15.2**				
M5-146A	**B**	**12**	**15.2**				

1. POWER OFF: Set "Voltage Range" and "FLD" switches to desired setting. Connect the voltage regulator as indicated in the diagram below.

2. POWER ON: Field lamp should blink and meter will indicate approximately the set point voltage indicated in the above table.

3. ADDITIONAL TEST:

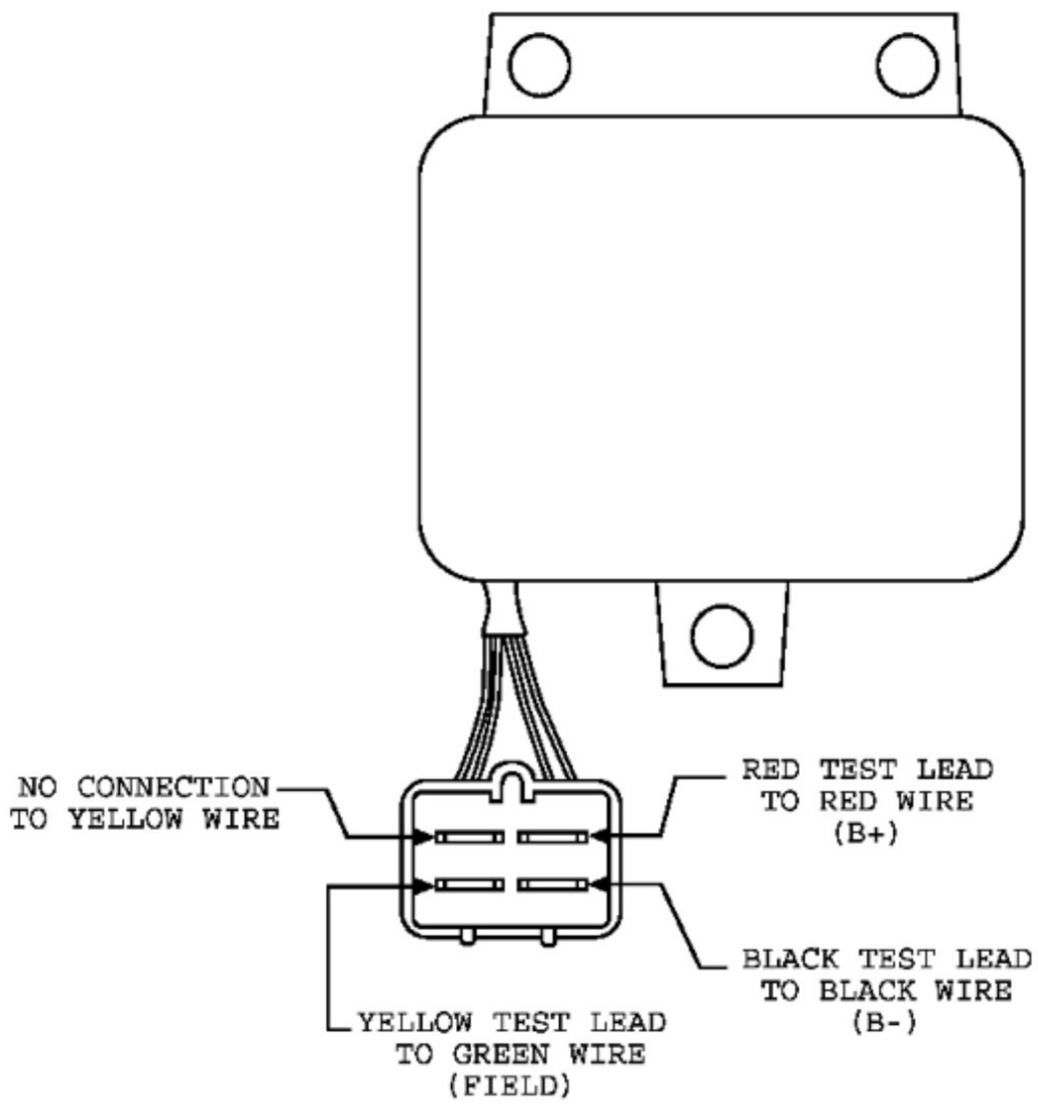

TRANSPO TESTER INSTRUCTIONS

for MOTOROLA type regulators

PART NO.	FLD	VOLT	SET POINT	PART NO.	FLD	VOLT	SET POINT
M5-76A	**B**	**12**	**14.0**	**M5-701A**	**B**	**12**	**14.2**
M5-118A	**B**	**12**	**14.2**				
M5-134A	**B**	**12**	**14.2**				
M5-144A	**B**	**12**	**14.2**				

1. POWER OFF: Set "Voltage Range" and "FLD" switches to desired setting. Connect the voltage regulator as indicated in the diagram below.

2. POWER ON: Field lamp should blink and meter will indicate approximately the set point voltage indicated in the above table.

3. ADDITIONAL TEST:

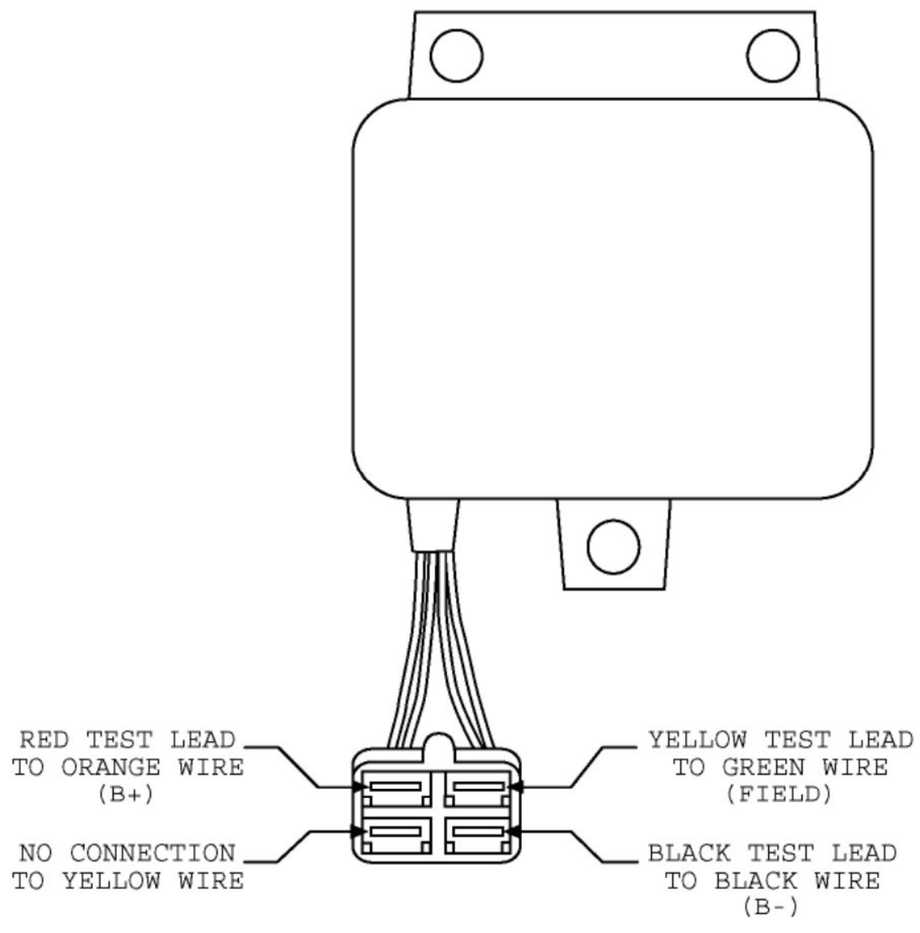

TRANSPO TESTER INSTRUCTIONS

for MOTOROLA type regulators

PART NO.	FLD	VOLT	SET POINT	PART NO.	FLD	VOLT	SET POINT
M5-145A	**B**	**12**	**15.2**				

1. POWER OFF: Set "Voltage Range" and "FLD" switches to desired setting. Connect the voltage regulator as indicated in the diagram below.

2. POWER ON: Field lamp should blink and meter will indicate approximately the set point voltage indicated in the above table.

3. ADDITIONAL TEST:

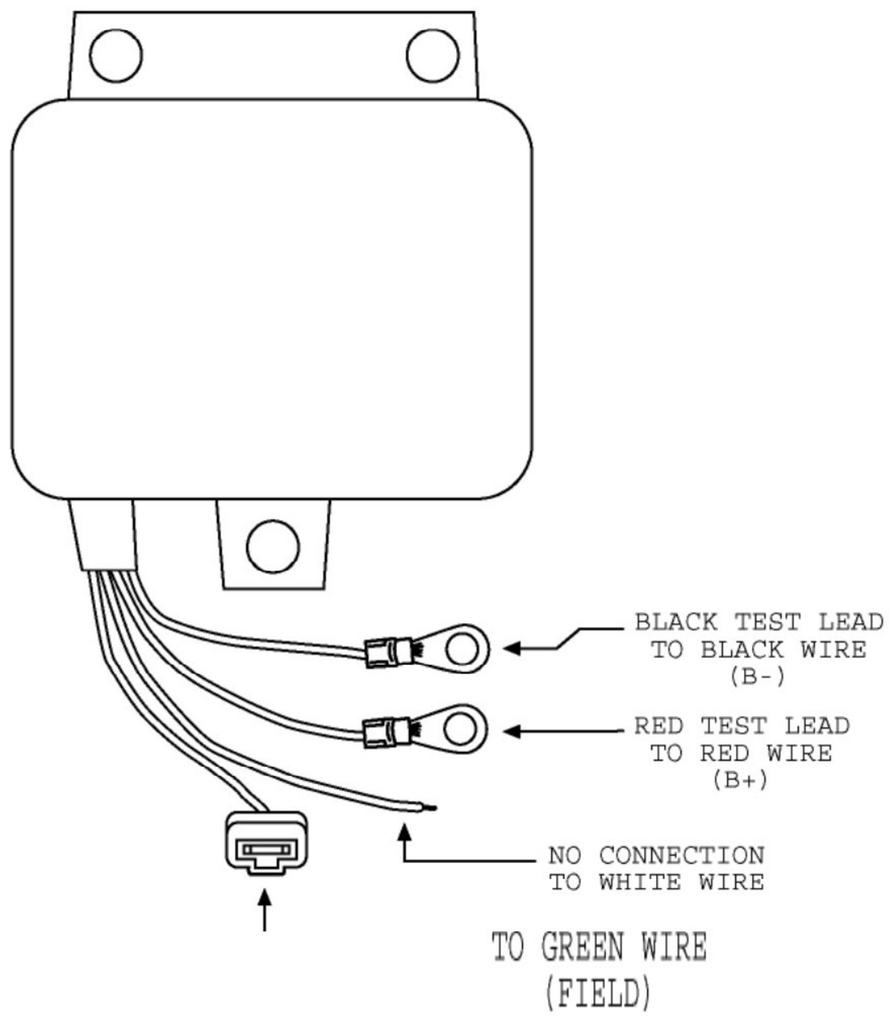

TRANSPO TESTER INSTRUCTIONS

for MOTOROLA type regulators

PART NO.	FLD	VOLT	SET POINT	PART NO.	FLD	VOLT	SET POINT
M5-197A	**B**	**12**	**15.0**				
M5-207A	**B**	**12**	**14.2**				
M5-250A	**B**	**12**	**14.2**				

1. POWER OFF: Set "Voltage Range" and "FLD" switches to desired setting. Connect the voltage regulator as indicated in the diagram below.

2. POWER ON: Field lamp should blink and meter will indicate approximately the set point voltage indicated in the above table.

3. ADDITIONAL TEST:

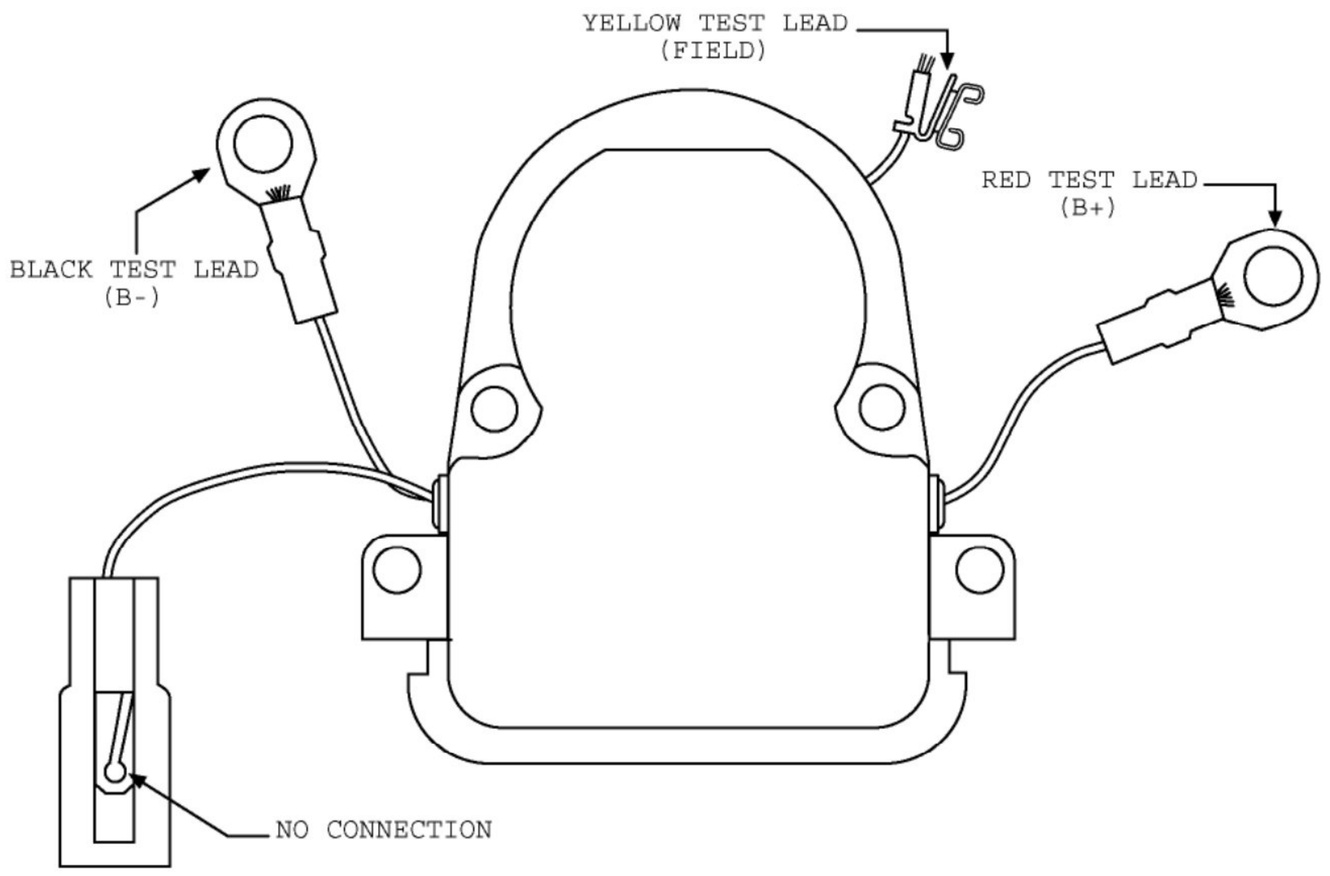

TRANSPO TESTER INSTRUCTIONS

for MOTOROLA type regulators

PART NO.	FLD	VOLT	SET POINT	PART NO.	FLD	VOLT	SET POINT
M5-198A	**B**	**12**	**15.0**				
M5-200A	**B**	**12**	**14.2**				
M5-244A	**B**	**12**	**13.3**				

1. POWER OFF: Set "Voltage Range" and "FLD" switches to desired setting. Connect the voltage regulator as indicated in the diagram below.

2. POWER ON: Field lamp should blink and meter will indicate approximately the set point voltage indicated in the above table.

3. ADDITIONAL TEST:

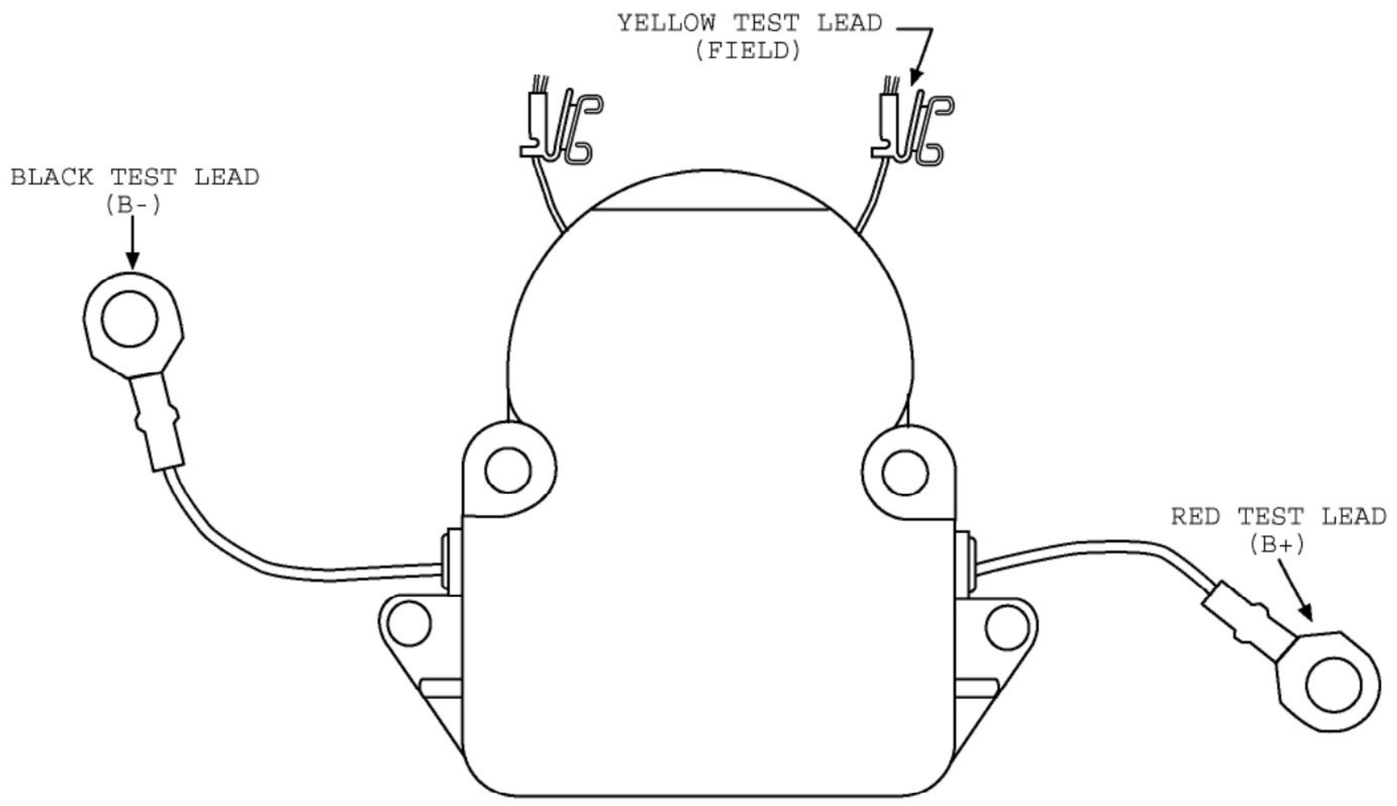

TRANSPO TESTER INSTRUCTIONS

for MOTOROLA type regulators

PART NO.	FLD	VOLT	SET POINT	PART NO.	FLD	VOLT	SET POINT
M5-200SA6	**B**	**6**	**7.8**	**M5-200SA32**	**B**	**32**	**37.5**
M5-200SA8	**B**	**8**	**9.5**				
M5-200SA12	**B**	**12**	**14.2**				
M5-200SA24	**B**	**24**	**27.5**				

1. POWER OFF: Set "Voltage Range" and "FLD" switches to desired setting. Connect the voltage regulator as indicated in the diagram below.

2. POWER ON: Field lamp should blink and meter will indicate approximately the set point voltage indicated in the above table.

3. ADDITIONAL TEST: Remove white test lead from the yellow wire of the regulator marked "Stator ". Field lamp should turn off and the meter will indicate low voltage. On regulators with indicator light, light should also turn on when stator is removed from the regulator.

* NOTE: Not used on 24V & 32V Regulators

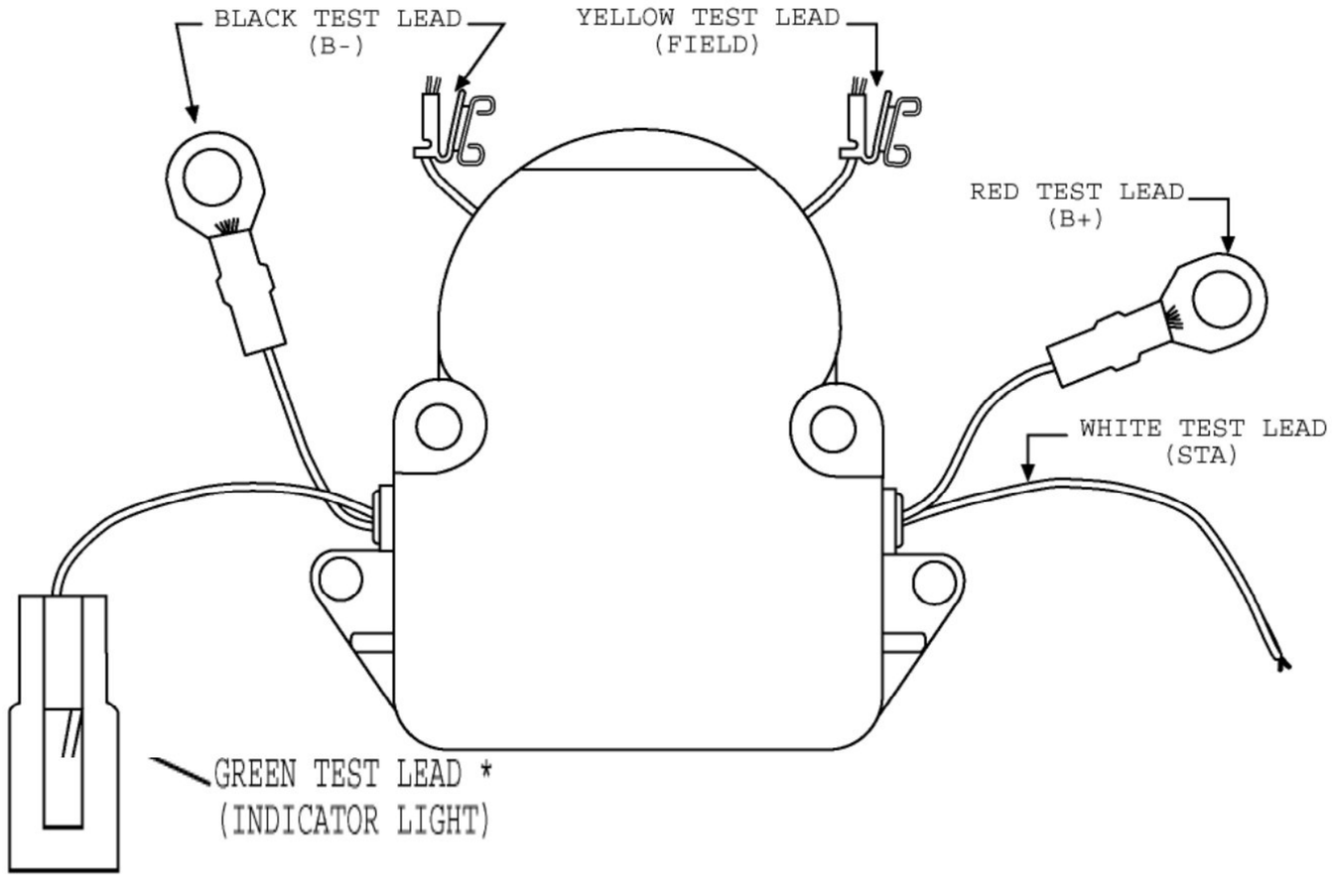

TRANSPO TESTER INSTRUCTIONS

for MOTOROLA type regulators

PART NO.	FLD	VOLT	SET POINT	PART NO.	FLD	VOLT	SET POINT
M5-226A	**A**	**12**	**14.4**				

1. POWER OFF: Set "Voltage Range" and "FLD" switches to desired setting. Connect the voltage regulator as indicated in the diagram below.

2. POWER ON: Field lamp should blink and meter will indicate approximately the set point voltage indicated in the above table.

3. ADDITIONAL TEST:

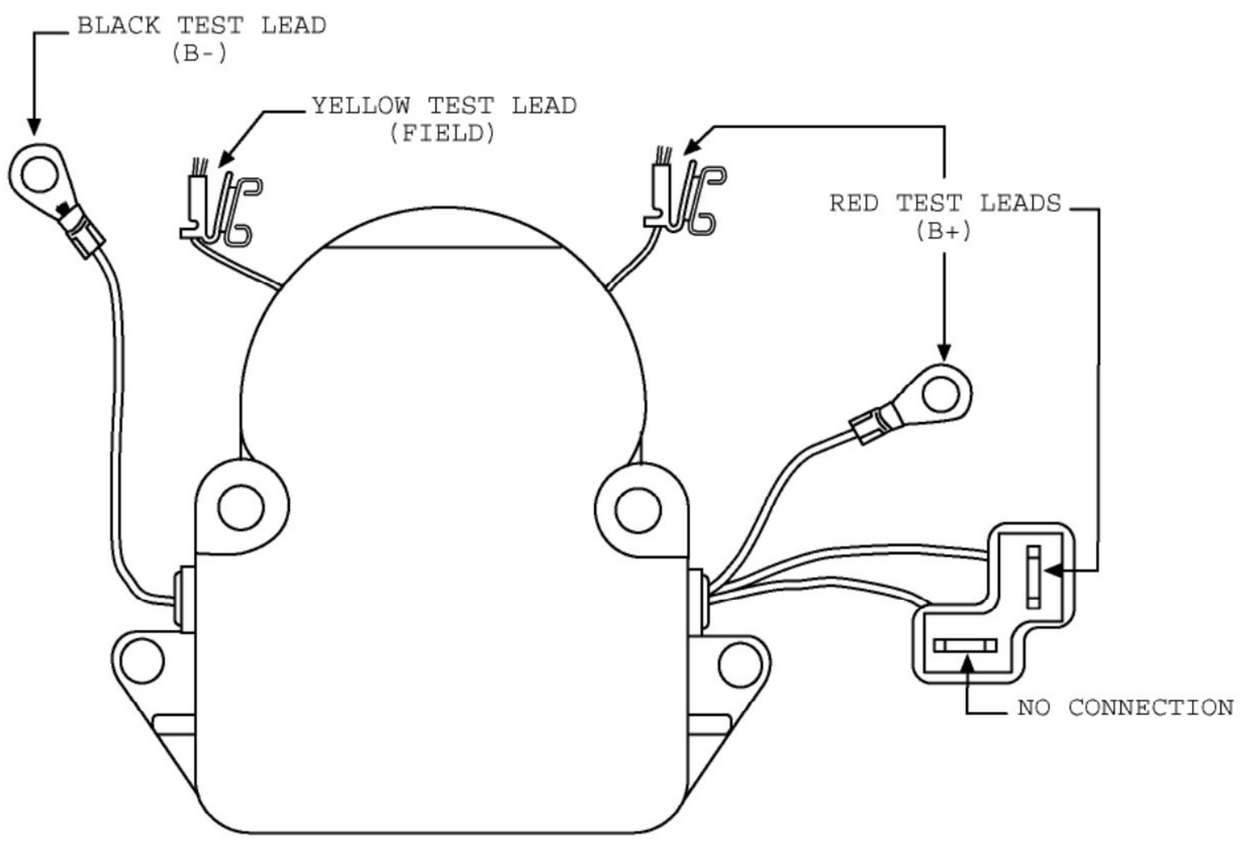

TRANSPO TESTER INSTRUCTIONS

for MOTOROLA type regulators

PART NO.	FLD	VOLT	SET POINT	PART NO.	FLD	VOLT	SET POINT
M5-208A	**B**	**24**	**29.2**				
M5-209A	**B**	**24**	**28.0**				

1. POWER OFF: Set "Voltage Range" and "FLD" switches to desired setting. Connect the voltage regulator as indicated in the diagram below.

2. POWER ON: Field lamp should blink and meter will indicate approximately the set point voltage indicated in the above table.

3. ADDITIONAL TEST: Measure between regulator's yellow and red wire using an ohm meter (without a connection to the voltage regulator tester). Approximately 150 Ohms must be measured.

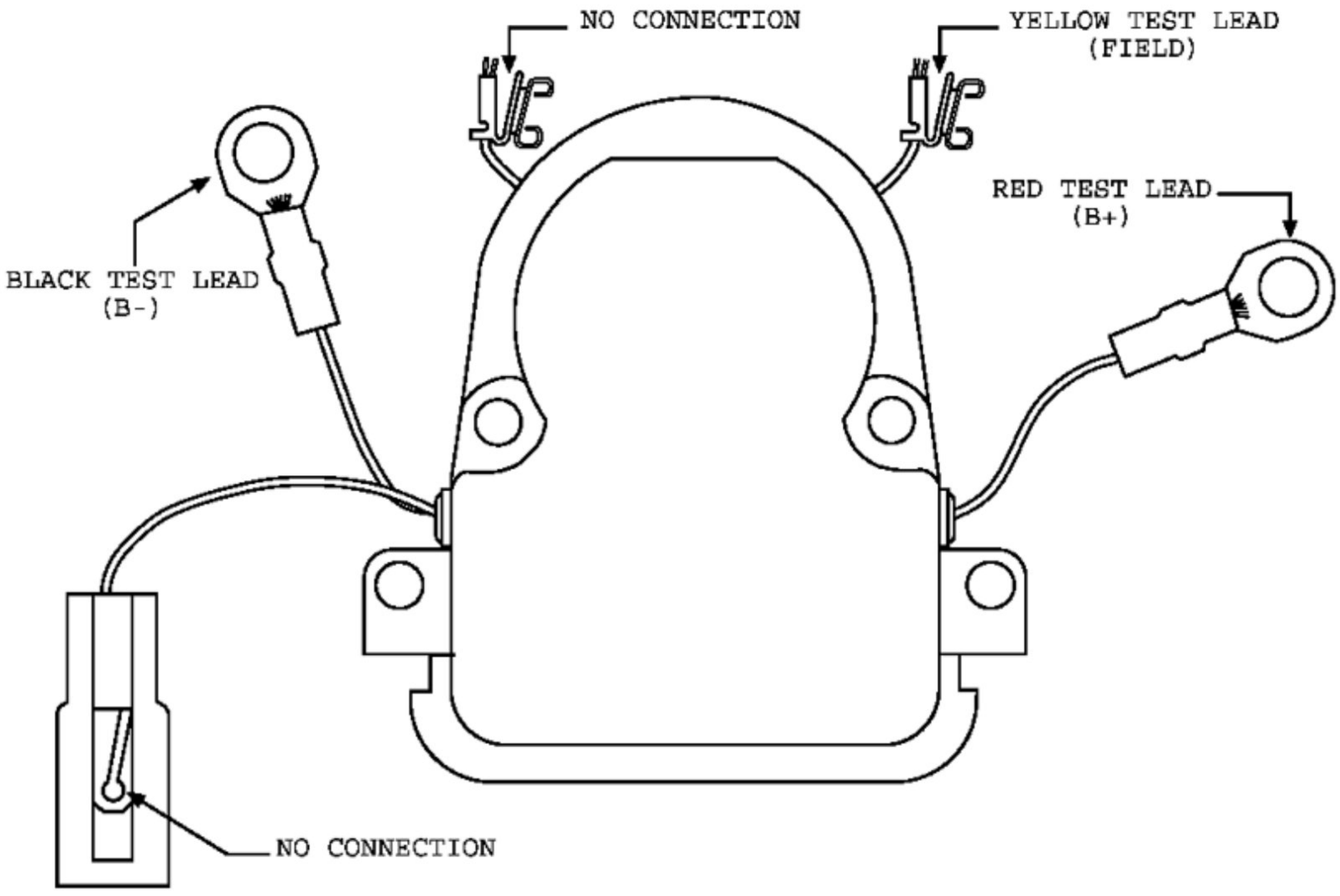

TRANSPO TESTER INSTRUCTIONS

for MOTOROLA type regulators

PART NO.	FLD	VOLT	SET POINT	PART NO.	FLD	VOLT	SET POINT
M5-225A	**A**	**12**	**14.4**				
M5-225	**A**	**12**	**14.4**				

1. POWER OFF: Set "Voltage Range" and "FLD" switches to desired setting. Connect the voltage regulator as indicated in the diagram below.

2. POWER ON: Field lamp should blink and meter will indicate approximately the set point voltage indicated in the above table.

3. ADDITIONAL TEST:

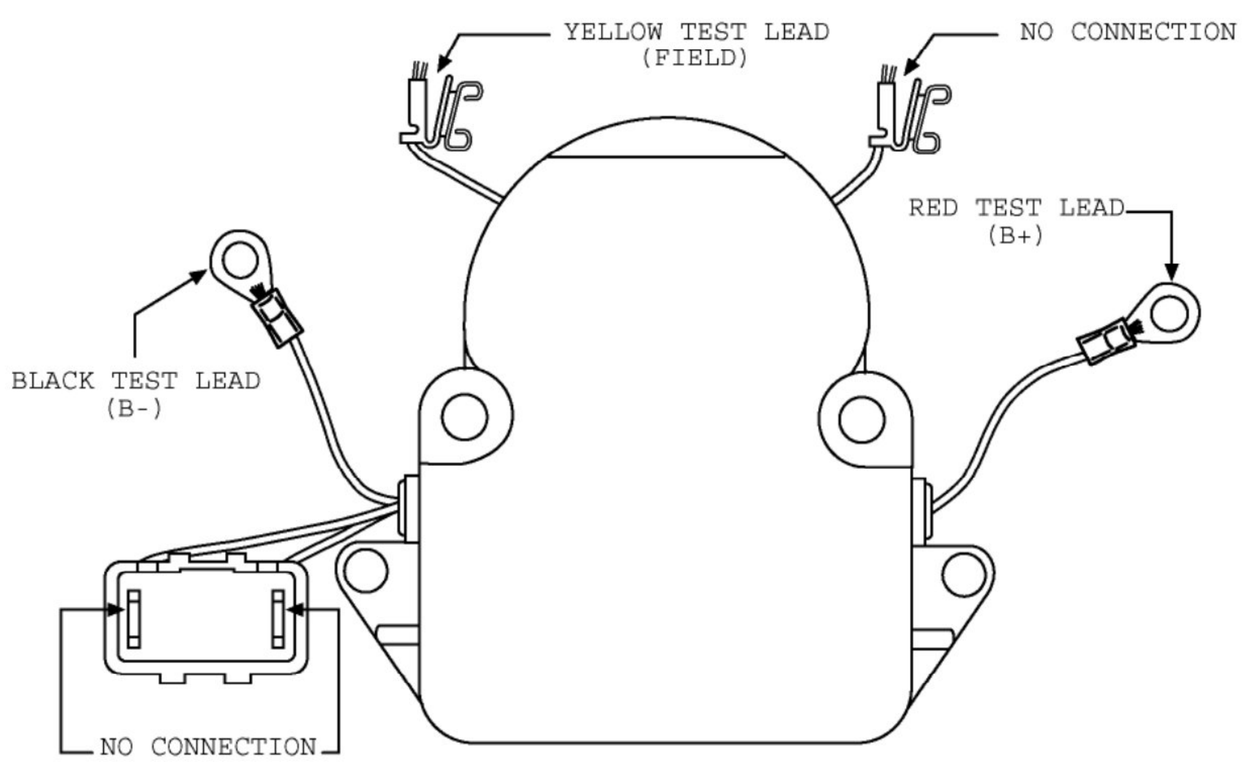

TRANSPO TESTER INSTRUCTIONS

for MOTOROLA type regulators

PART NO.	FLD	VOLT	SET POINT	PART NO.	FLD	VOLT	SET POINT
M5-217A	**B**	**12**	**14.2**				

1. POWER OFF: Set "Voltage Range" and "FLD" switches to desired setting. Connect the voltage regulator as indicated in the diagram below.

2. POWER ON: Field lamp should blink and meter will indicate approximately the set point voltage indicated in the above table.

3. ADDITIONAL TEST:

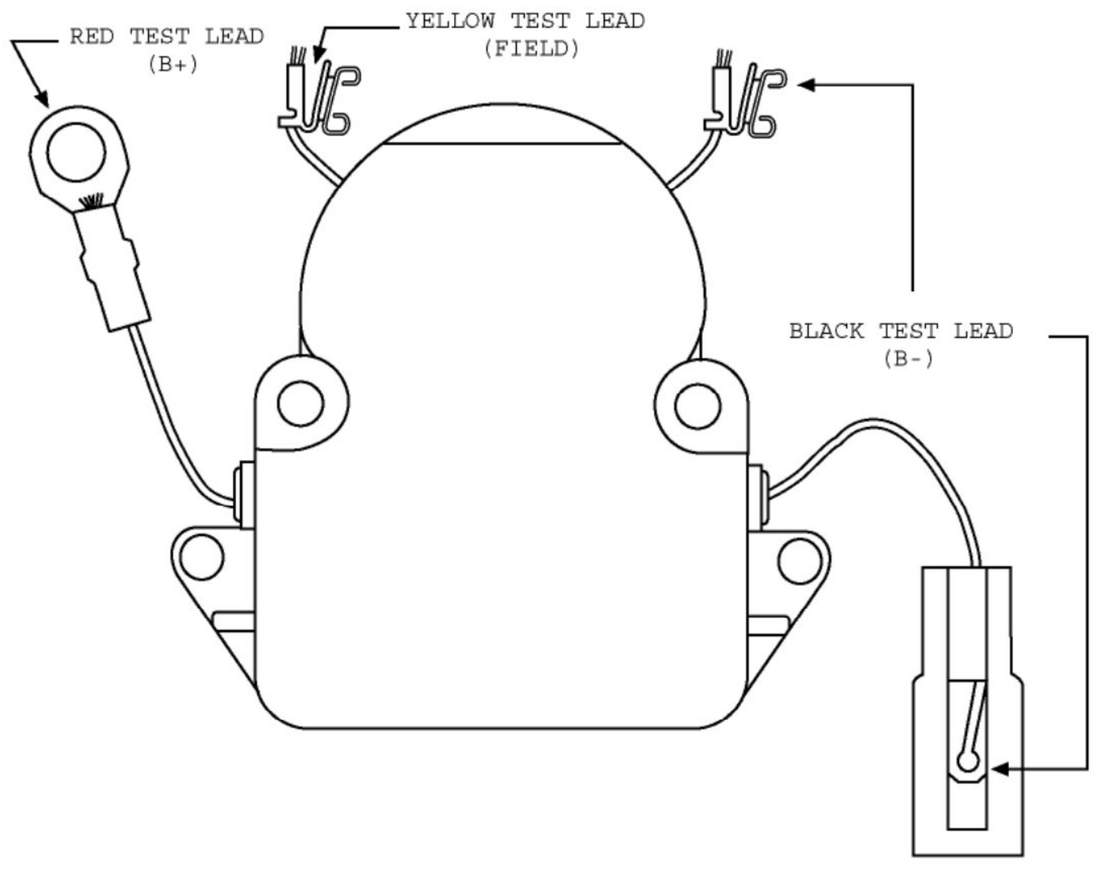

TRANSPO TESTER INSTRUCTIONS

for MOTOROLA type regulators

PART NO.	FLD	VOLT	SET POINT	PART NO.	FLD	VOLT	SET POINT
M5-203A	**B**	**12**	**14.2**				

1. POWER OFF: Set "Voltage Range" and "FLD" switches to desired setting. Connect the voltage regulator as indicated in the diagram below.

2. POWER ON: Field lamp should blink and meter will indicate approximately the set point voltage indicated in the above table.

3. ADDITIONAL TEST:

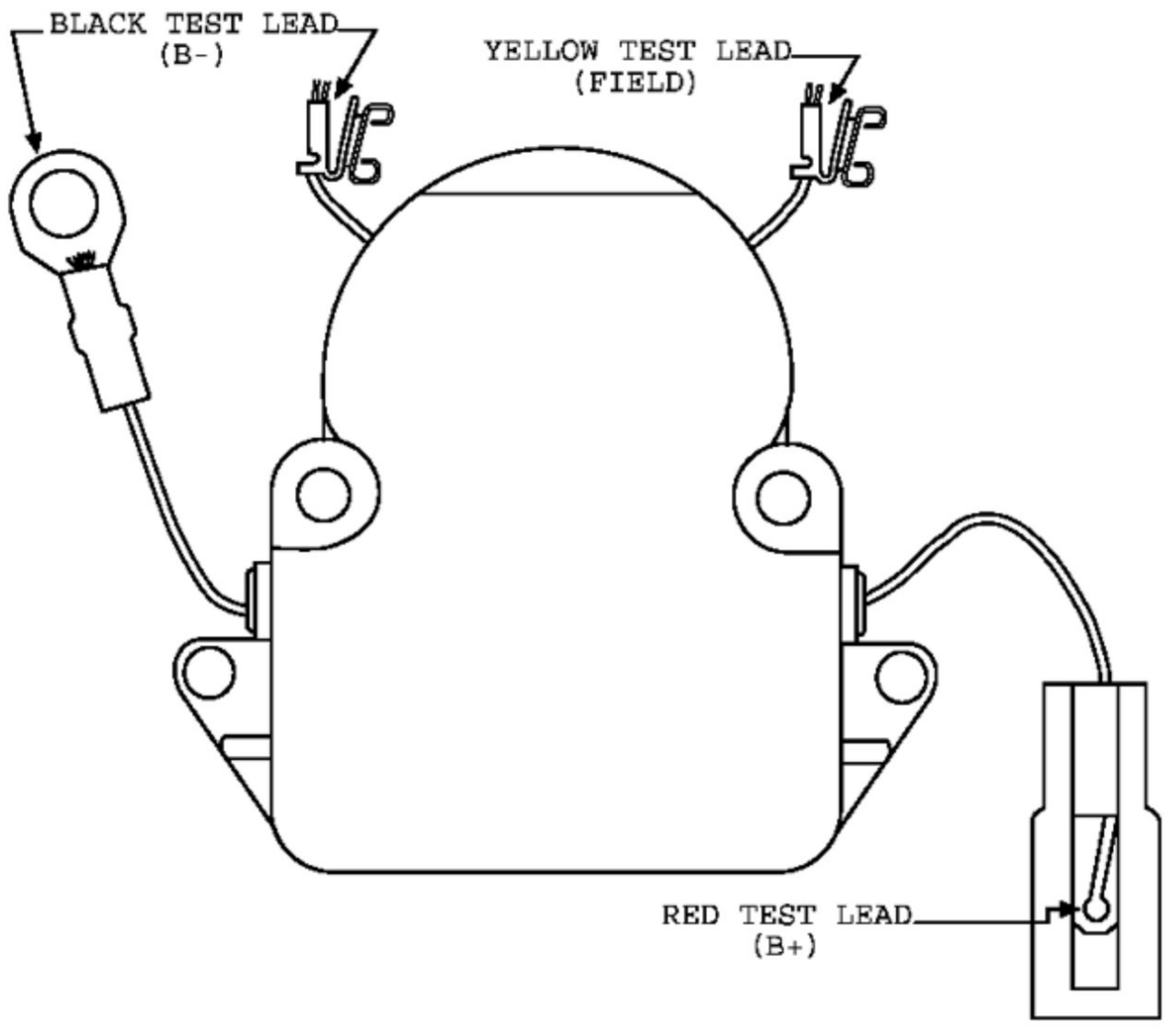

TRANSPO TESTER INSTRUCTIONS

for MOTOROLA type regulators

PART NO.	FLD	VOLT	SET POINT	PART NO.	FLD	VOLT	SET POINT
M5-233A	**B**	**12**	**14.4**				

1. POWER OFF: Set "Voltage Range" and "FLD" switches to desired setting. Connect the voltage regulator as indicated in the diagram below.

2. POWER ON: Field lamp should blink and meter will indicate approximately the set point voltage indicated in the above table.

3. ADDITIONAL TEST: Remove white test lead from yellow wire of the regulator marked as "Stator". Field lamp should turn off and the meter will indicate low voltage.

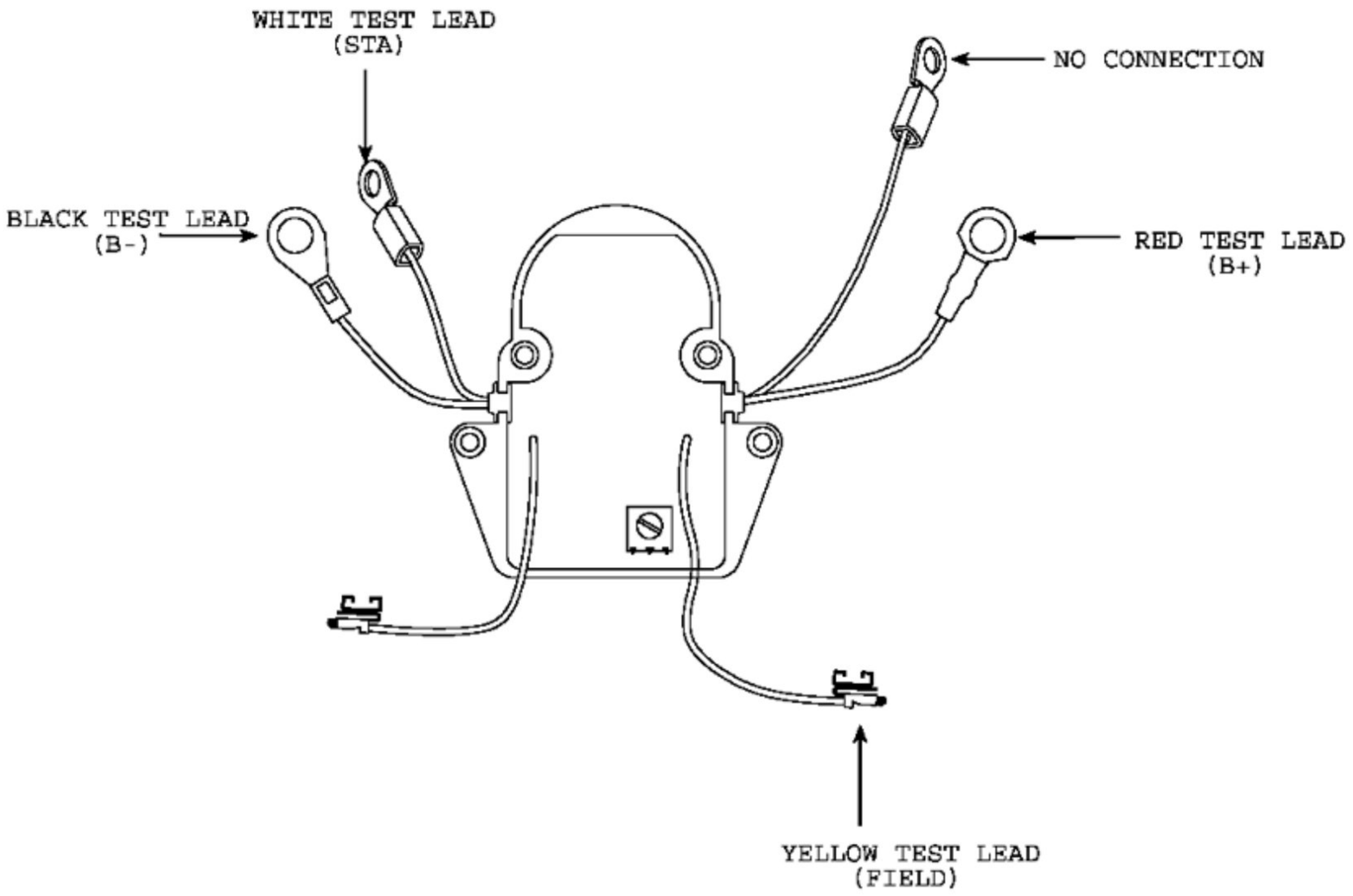

TRANSPO TESTER INSTRUCTIONS

for MOTOROLA type regulators

PART NO.	FLD	VOLT	SET POINT	PART NO.	FLD	VOLT	SET POINT
M5-224A	**B**	**12**	**14.4**				
M5-245A	**B**	**12**	**13.8**				

1. POWER OFF: Set "Voltage Range" and "FLD" switches to desired setting. Connect the voltage regulator as indicated in the diagram below.

2. POWER ON: Field lamp should blink and meter will indicate approximately the set point voltage indicated in the above table.

3. ADDITIONAL TEST: Remove white test lead from yellow wire of the regulator marked as "Stator". Field lamp should turn off and the meter will indicate low voltage.

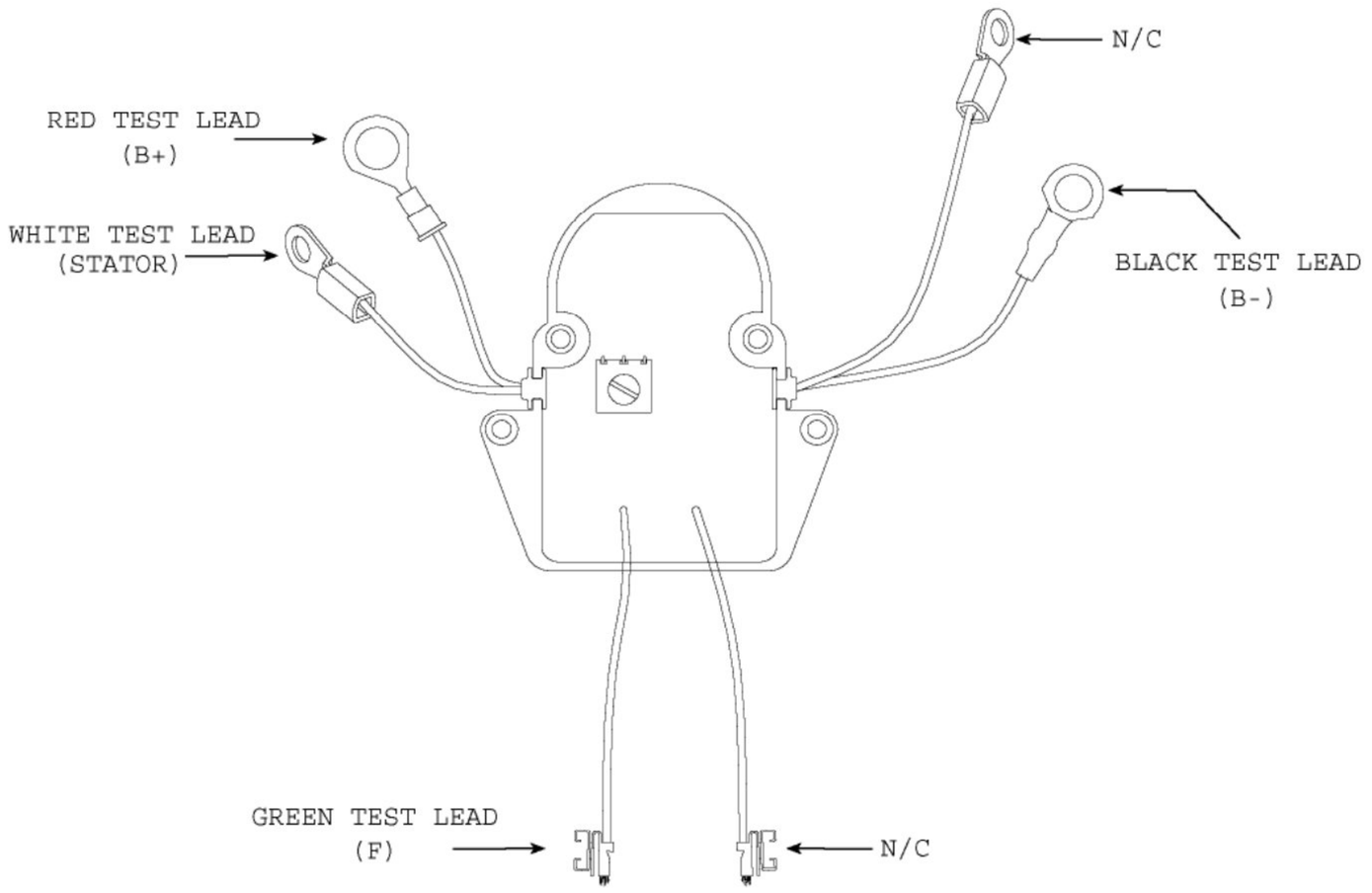

TRANSPO TESTER INSTRUCTIONS

for MOTOROLA type regulators

PART NO.	FLD	VOLT	SET POINT	PART NO.	FLD	VOLT	SET POINT
M5-181A	**B**	**12**	**15.0**				
M5-192A	**B**	**12**	**14.2**				
M5-201A	**B**	**12**	**14.2**				

1. POWER OFF: Set "Voltage Range" and "FLD" switches to desired setting. Connect the voltage regulator as indicated in the diagram below.

2. POWER ON: Field lamp should blink and meter will indicate approximately the set point voltage indicated in the above table.

3. ADDITIONAL TEST:

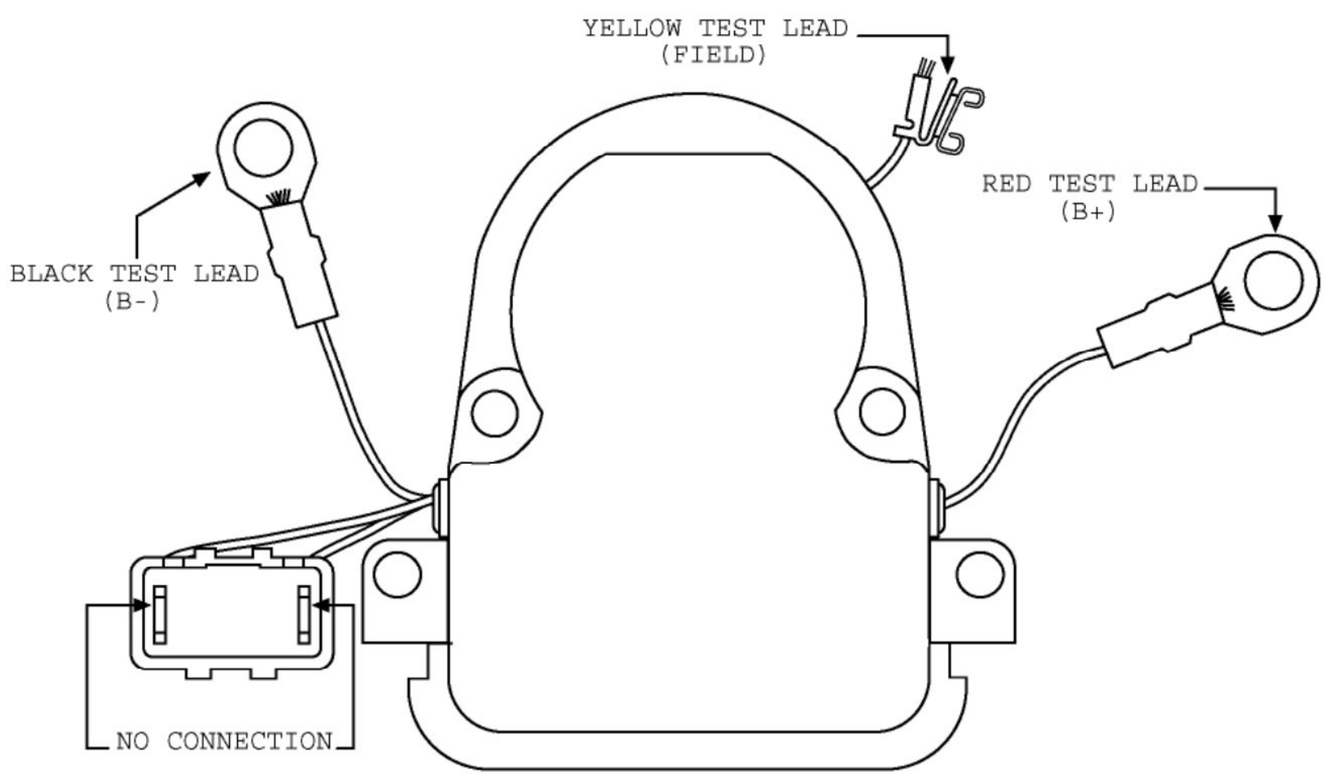

TRANSPO TESTER INSTRUCTIONS

for MOTOROLA type regulators

PART NO.	FLD	VOLT	SET POINT	PART NO.	FLD	VOLT	SET POINT
M5-172A	**B**	**12**	**14.2**				
M5-169A	**B**	**12**	**14.2**				

1. POWER OFF: Set "Voltage Range" and "FLD" switches to desired setting. Connect the voltage regulator as indicated in the diagram below.

2. POWER ON: Field lamp should blink and meter will indicate approximately the set point voltage indicated in the above table.

3. ADDITIONAL TEST:

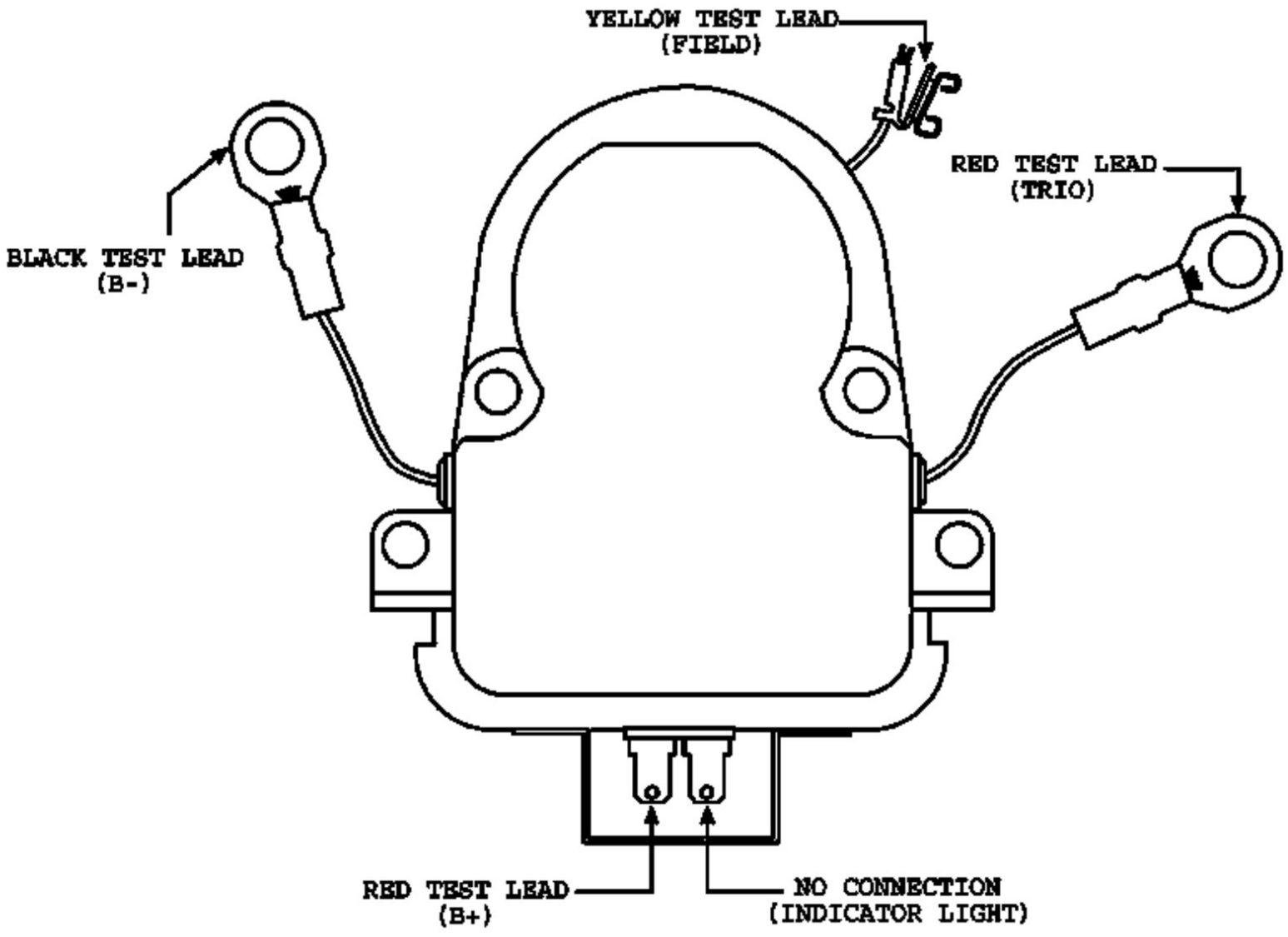

TRANSPO TESTER INSTRUCTIONS

for MOTOROLA type regulators

PART NO.	FLD	VOLT	SET POINT	PART NO.	FLD	VOLT	SET POINT
M5-149A	**B**	**24**	**28.4**				

1. POWER OFF: Set "Voltage Range" and "FLD" switches to desired setting. Connect the voltage regulator as indicated in the diagram below.

2. POWER ON: Field lamp should blink and meter will indicate approximately the set point voltage indicated in the above table.

3. ADDITIONAL TEST: Remove red test lead from terminal marked "S". field lamp should still blink and the meter will indicate approximately 29.5v.

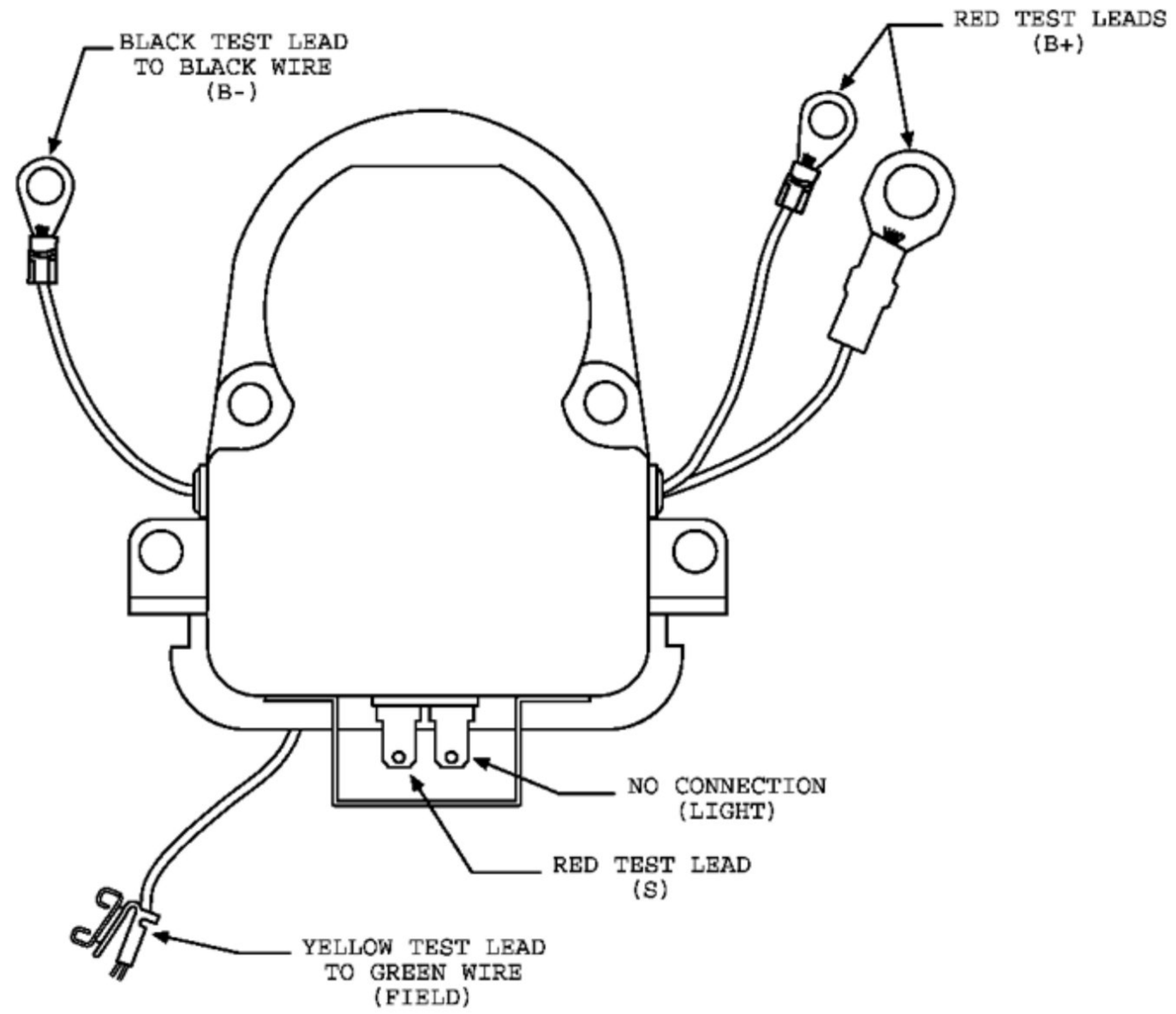

TRANSPO TESTER INSTRUCTIONS

for MOTOROLA type regulators

PART NO.	FLD	VOLT	SET POINT	PART NO.	FLD	VOLT	SET POINT
M5-215A	**A**	**12**	**14.4**				

1. POWER OFF: Set "Voltage Range" and "FLD" switches to desired setting. Connect the voltage regulator as indicated in the diagram below.

2. POWER ON: Field lamp should blink and meter will indicate approximately the set point voltage indicated in the above table.

3. ADDITIONAL TEST:

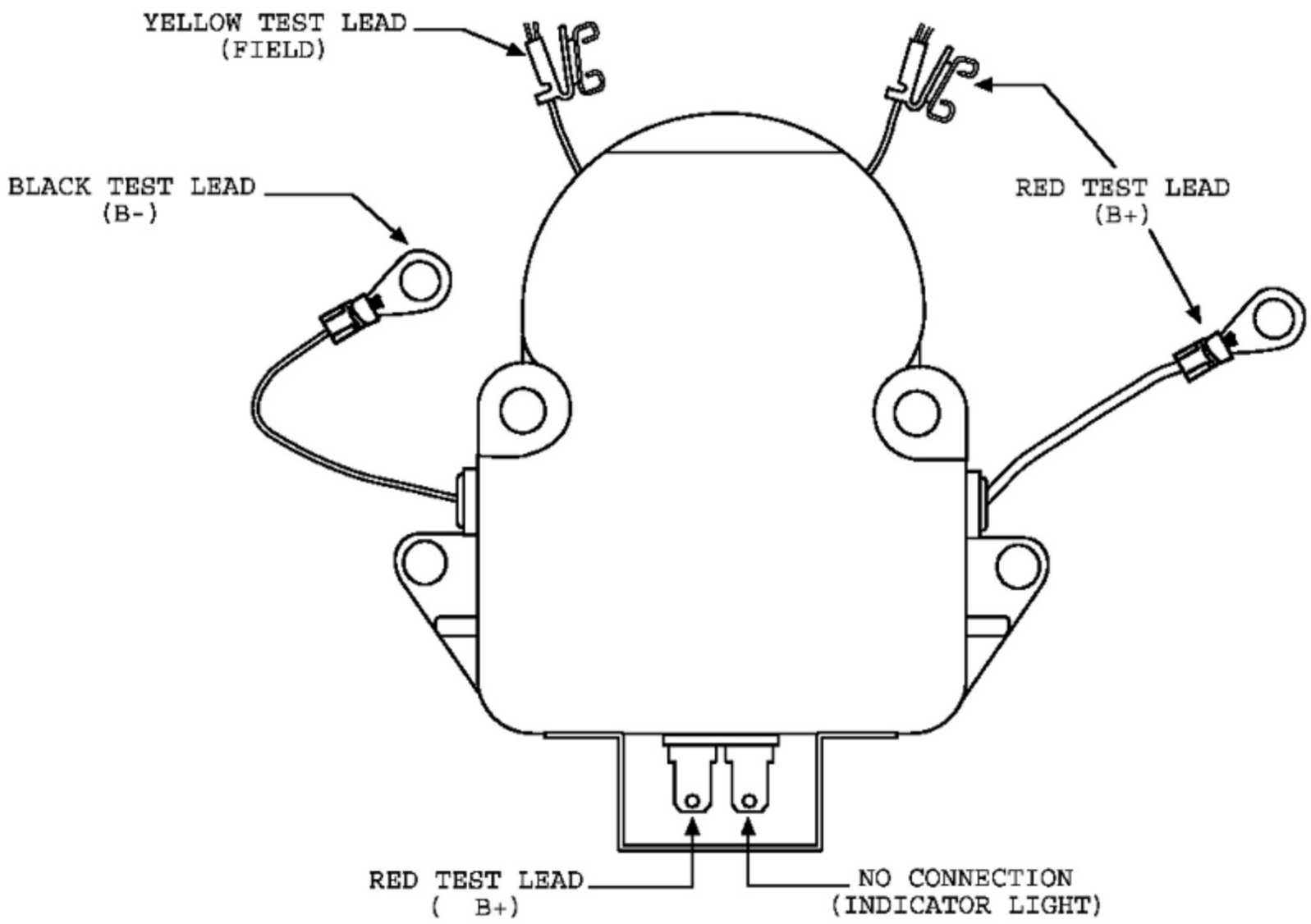

TRANSPO TESTER INSTRUCTIONS

for MOTOROLA type regulators

PART NO.	FLD	VOLT	SET POINT	PART NO.	FLD	VOLT	SET POINT
M5-193A	**B**	**12**	**14.4**				
M5-214A	**B**	**12**	**14.4**				
M5-240A	**B**	**12**	**14.4**				

1. POWER OFF: Set "Voltage Range" and "FLD" switches to desired setting. Connect the voltage regulator as indicated in the diagram below.

2. POWER ON: Field lamp should blink and meter will indicate approximately the set point voltage indicated in the above table.

3. ADDITIONAL TEST:

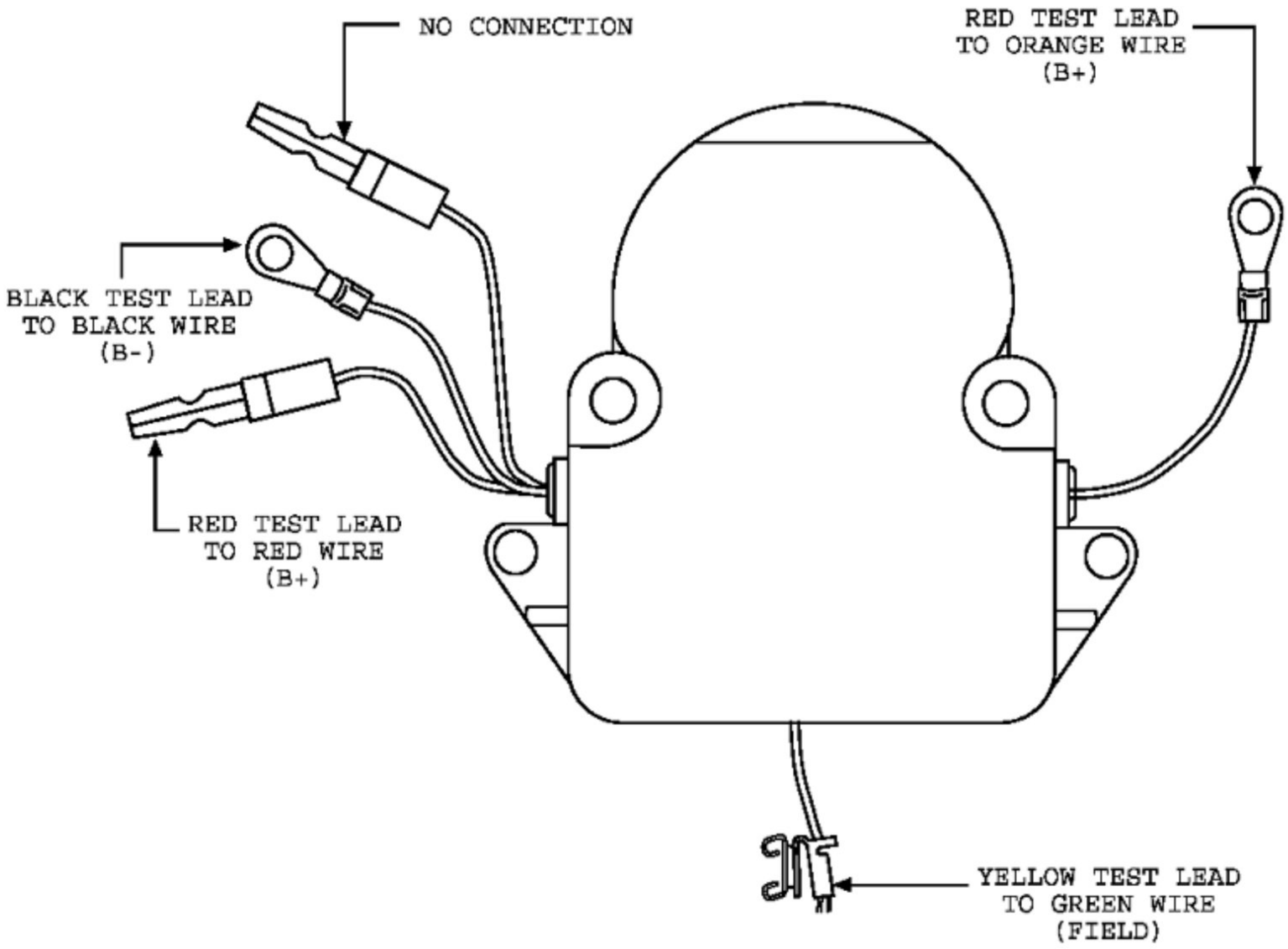

TRANSPO TESTER INSTRUCTIONS

for MOTOROLA type regulators

PART NO.	FLD	VOLT	SET POINT	PART NO.	FLD	VOLT	SET POINT
M5-237A	**B**	**12**	**14.4**				

1. POWER OFF: Set "Voltage Range" and "FLD" switches to desired setting. Connect the voltage regulator as indicated in the diagram below.

2. POWER ON: Field lamp should blink and meter will indicate approximately the set point voltage indicated in the above table.

3. ADDITIONAL TEST: Remove red test lead from stator wires. The field lamp should stay on and the meter will indicate high voltage. Connect red test lead to the post marked "no connection". Regulator will regulate at the specified set point voltage.

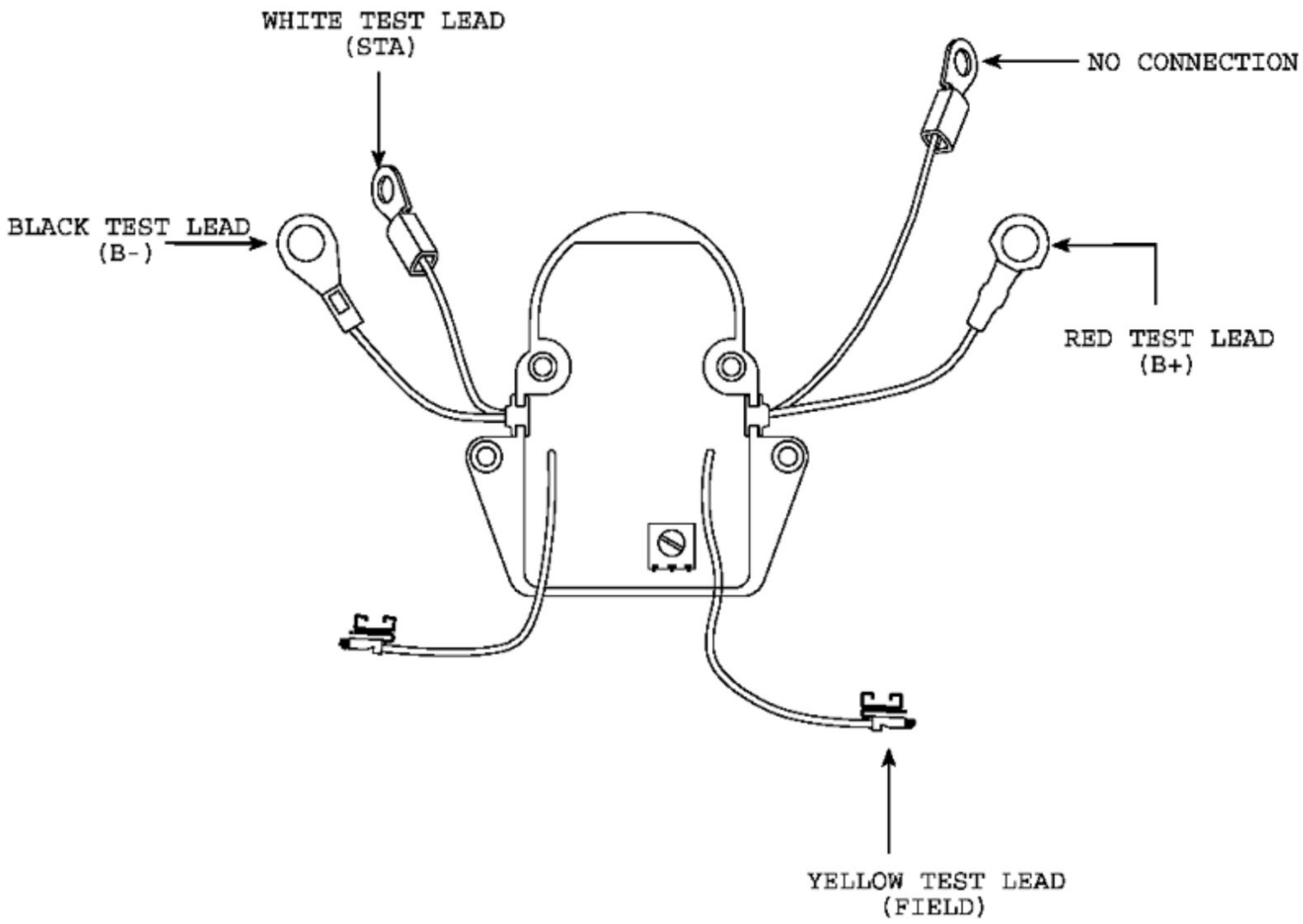

TRANSPO TESTER INSTRUCTIONS

for MOTOROLA type regulators

PART NO.	FLD	VOLT	SET POINT	PART NO.	FLD	VOLT	SET POINT
M5-292A	**A**	**12**	**14.4**				

1. POWER OFF: Set "Voltage Range" and "FLD" switches to desired setting. Connect the voltage regulator as indicated in the diagram below.

2. POWER ON: Field lamp should blink and meter will indicate approximately the set point voltage indicated in the above table.

3. ADDITIONAL TEST: Remove white test lead from terminal marked "Stator". Field lamp should turn off and the meter will indicate approximately 12v.

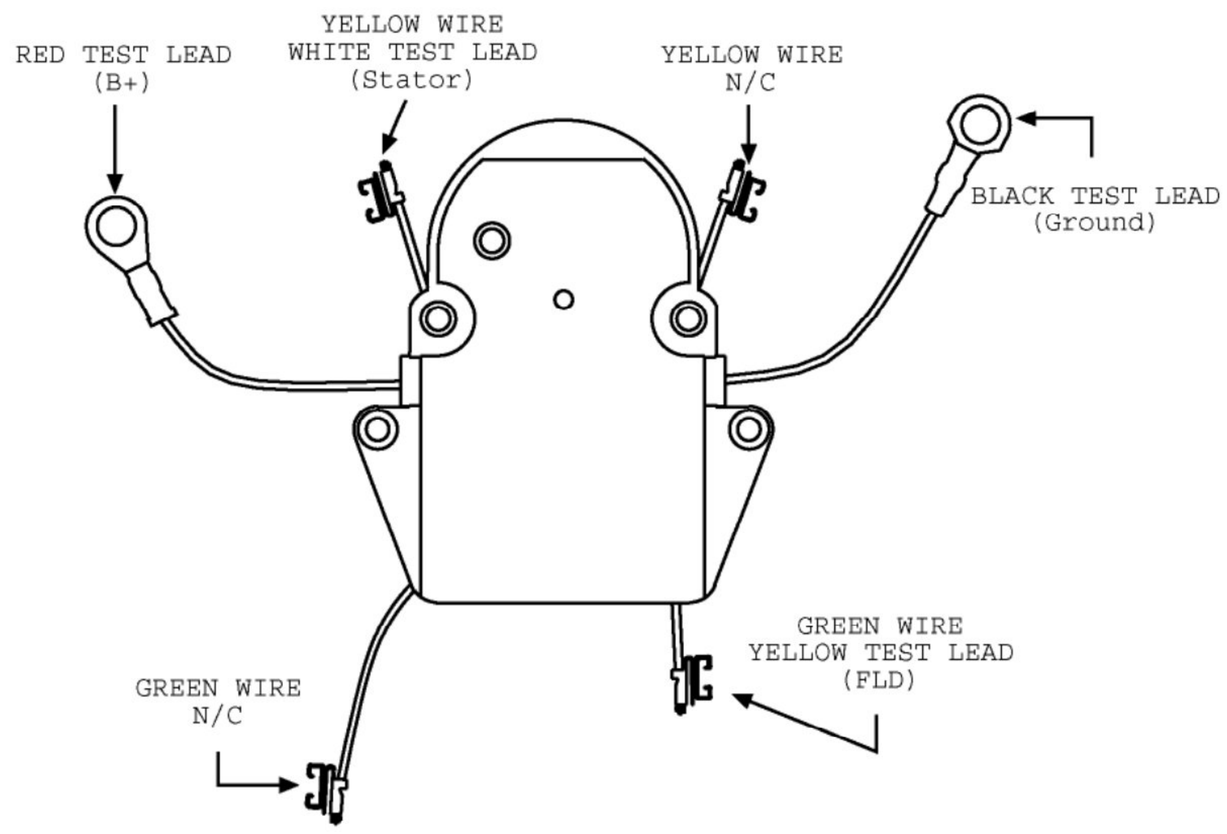

TRANSPO TESTER INSTRUCTIONS

for MOTOROLA type regulators

PART NO.	FLD	VOLT	SET POINT	PART NO.	FLD	VOLT	SET POINT
M5-329A	**A**	**12**	**14.2**				

1. POWER OFF: Set "Voltage Range" and "FLD" switches to desired setting. Connect the voltage regulator as indicated in the diagram below.

2. POWER ON: Field lamp should blink and meter will indicate approximately the set point voltage indicated in the above table.

3. ADDITIONAL TEST:

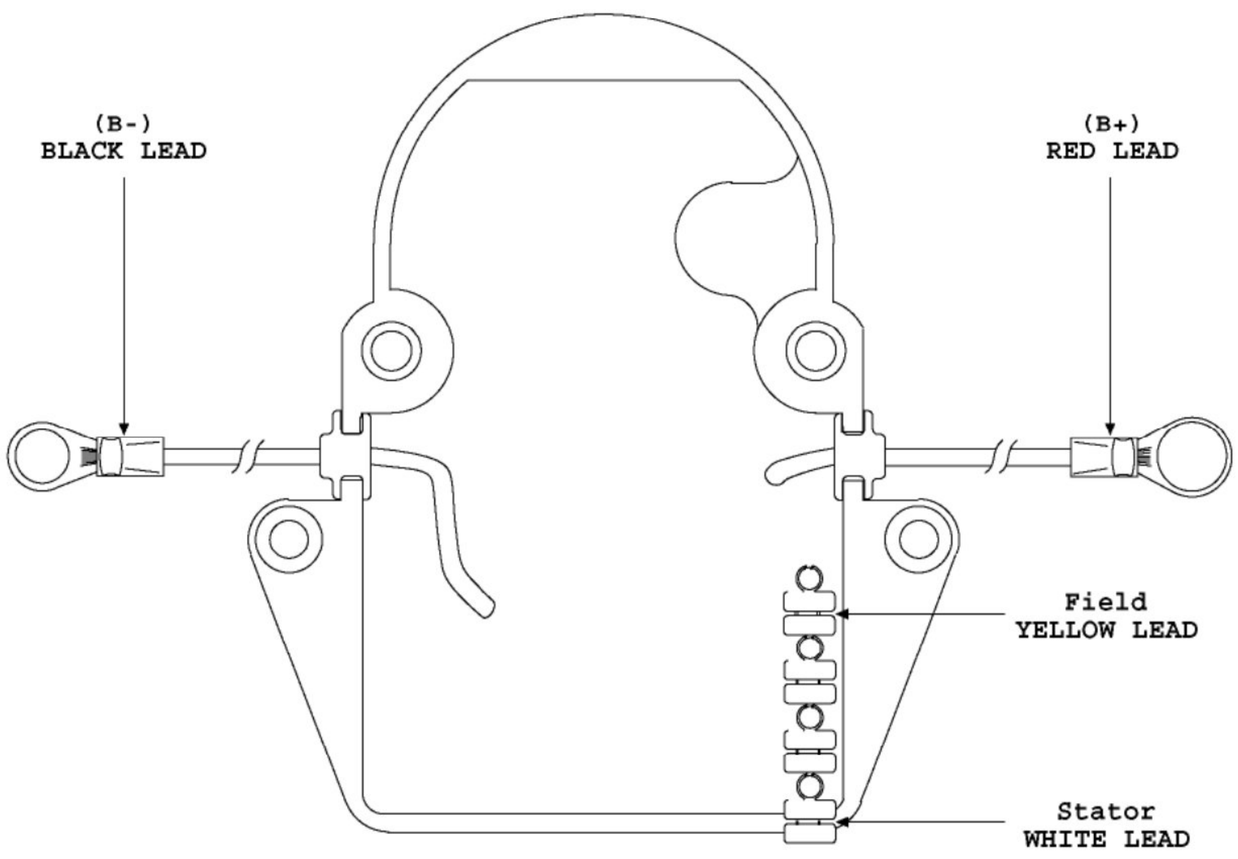

TRANSPO TESTER INSTRUCTIONS

for MOTOROLA type regulators

PART NO.	FLD	VOLT	SET POINT	PART NO.	FLD	VOLT	SET POINT
M5-247A	**B**	**24**	**27.6**				

1. POWER OFF: Set "Voltage Range" and "FLD" switches to desired setting. Connect the voltage regulator as indicated in the diagram below.

2. POWER ON: Field lamp should blink and meter will indicate approximately the set point voltage indicated in the above table.

3. ADDITIONAL TEST: Remove white test lead from yellow wire of the regulator marked as "Stator". Field lamp should turn off and the meter will indicate low voltage.

NOTE: Original Equipment Regulator no. 5-247 is an "A" circuit compared to Transpo's "B" circuit.

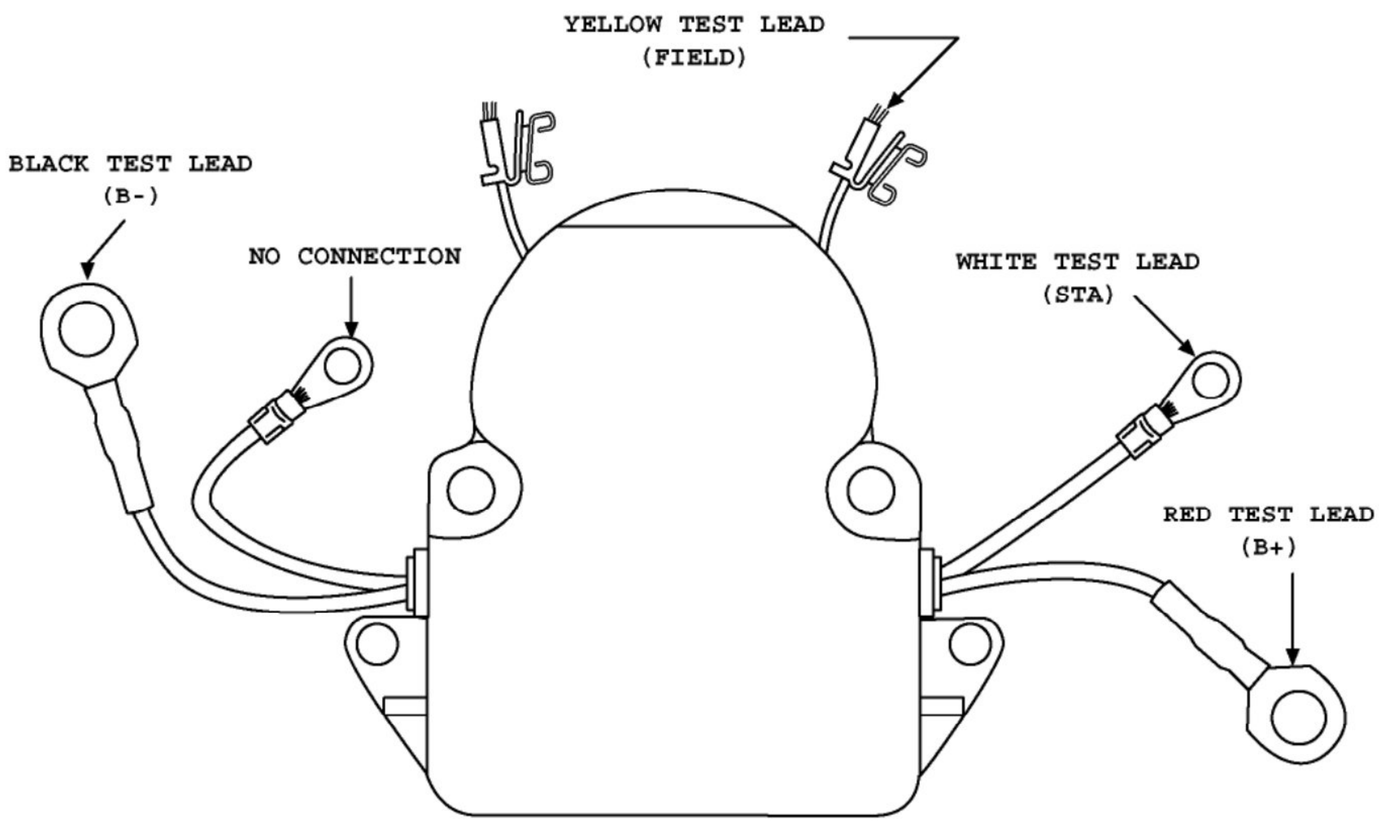

TRANSPO TESTER INSTRUCTIONS

for MOTOROLA type regulators

PART NO.	FLD	VOLT	SET POINT	PART NO.	FLD	VOLT	SET POINT
M5-249A	**B**	**24**	**28.0**				

1. POWER OFF: Set "Voltage Range" and "FLD" switches to desired setting. Connect the voltage regulator as indicated in the diagram below.

2. POWER ON: Field lamp should blink and meter will indicate approximately the set point voltage indicated in the above table.

3. ADDITIONAL TEST: Remove white test lead from yellow wire of the regulator marked as "Stator". Field lamp should turn off and the meter will indicate low voltage.

NOTE: Original Equipment Regulator no. 5-249 is an "A" circuit compared to Transpo's "B" circuit.

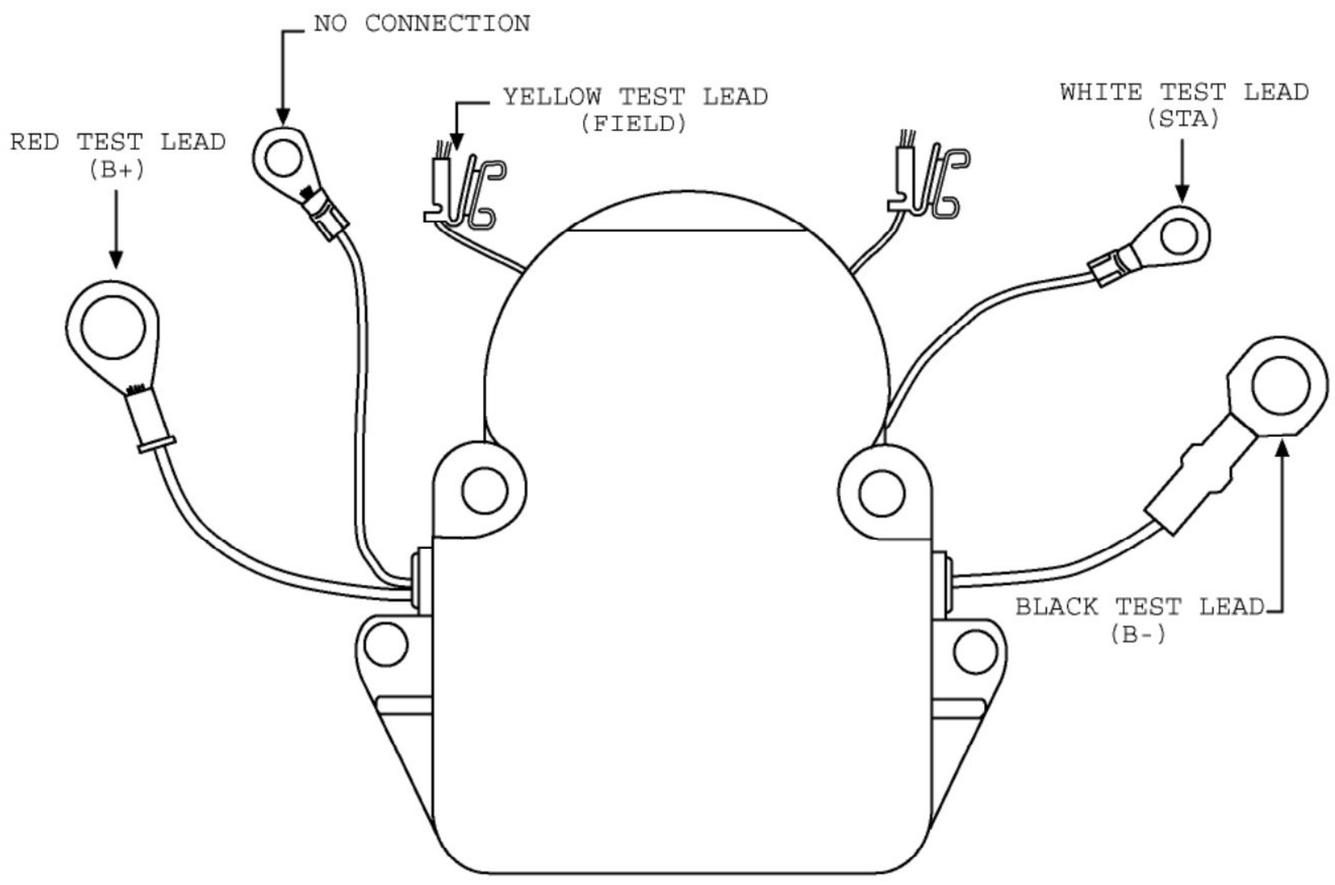

TRANSPO TESTER INSTRUCTIONS

for MOTOROLA type regulators

PART NO.	FLD	VOLT	SET POINT	PART NO.	FLD	VOLT	SET POINT
M5-050A	**A**	**12**	**14.5**				

1. POWER OFF: Set "Voltage Range" and "FLD" switches to desired setting. Connect the voltage regulator as indicated in the diagram below.

2. POWER ON: Field lamp should blink and meter will indicate approximately the set point voltage indicated in the above table.

3. ADDITIONAL TEST: Remove white test lead from yellow wire of the regulator marked as "Stator". Field lamp should turn off and the meter will indicate low voltage.

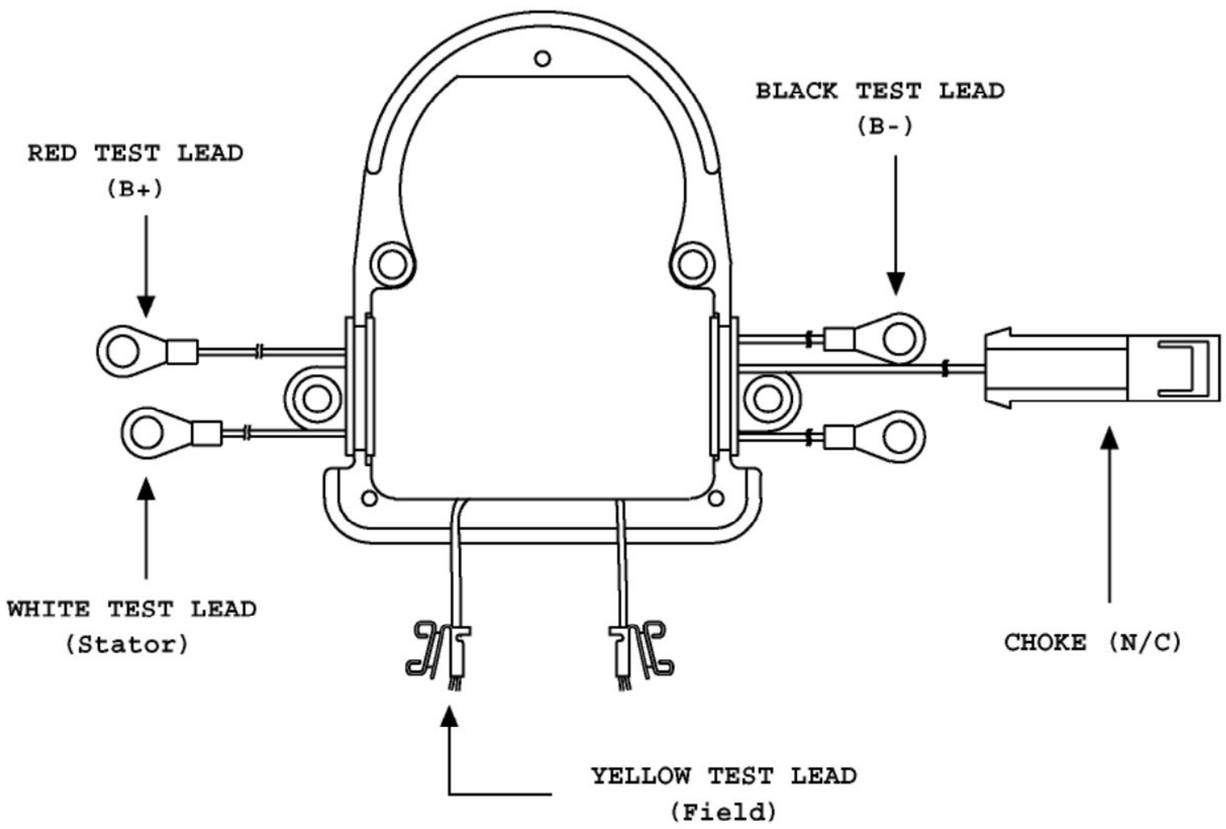

TRANSPO TESTER INSTRUCTIONS

for MOTOROLA type regulators

PART NO.	FLD	VOLT	SET POINT	PART NO.	FLD	VOLT	SET POINT
M5-280A	**A**	**12**	**14.2**				

1. POWER OFF: Set "Voltage Range" and "FLD" switches to desired setting. Connect the voltage regulator as indicated in the diagram below.

2. POWER ON: Field lamp should blink and meter will indicate approximately the set point voltage indicated in the above table.

3. ADDITIONAL TEST: Remove white test lead from yellow wire of the regulator marked as "Stator". Field lamp should turn off and the meter will indicate low voltage.

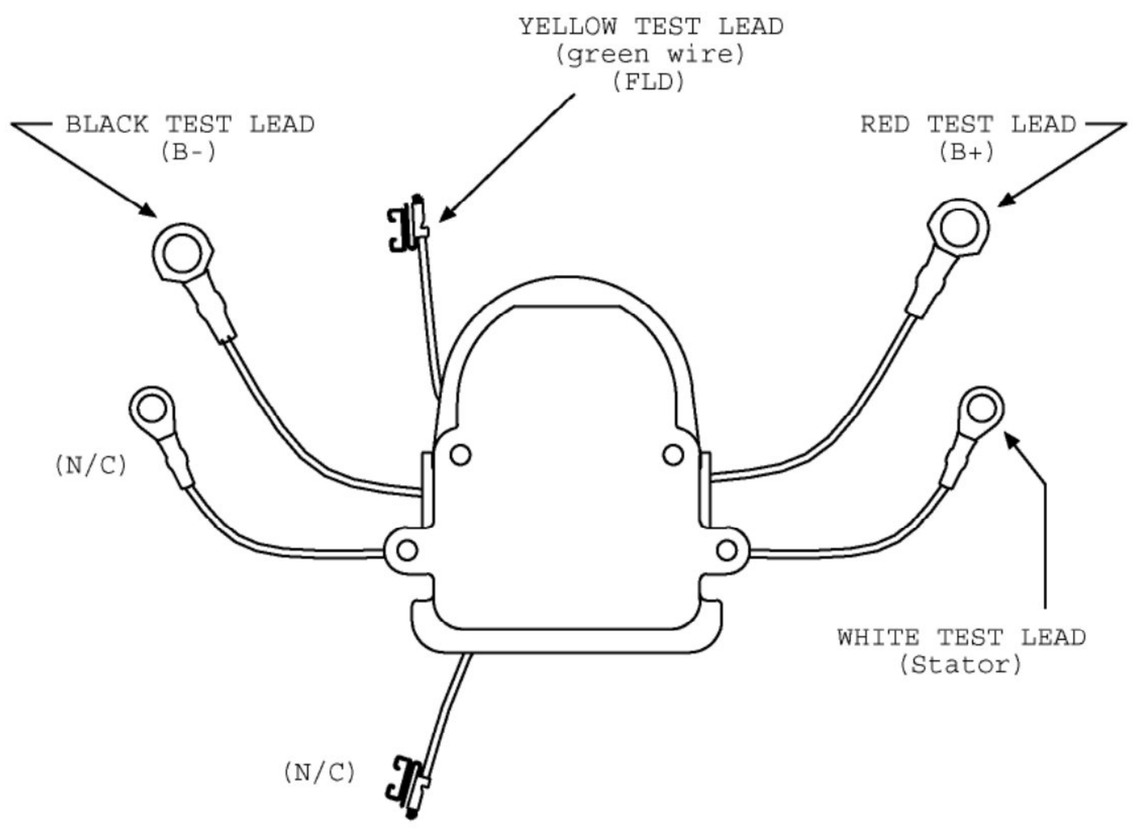

TRANSPO TESTER INSTRUCTIONS

for MOTOROLA type regulators

PART NO.	FLD	VOLT	SET POINT	PART NO.	FLD	VOLT	SET POINT
M5-29A	**B**	**12**	**15.0**	**M5-152A**	**B**	**12**	**14.2**
M5-48A	**B**	**24**	**29.2**	**M5-182A**	**B**	**24**	**29.2**
M5-63A	**B**	**24**	**29.2**	**M5-242(A)**	**B**	**12**	**14.2**
M5-151A	**B**	**12**	**15.0**	**M5-248A**	**B**	**24**	**28.4**

1. POWER OFF: Set "Voltage Range" and "FLD" switches to desired setting. Connect the voltage regulator as indicated in the diagram below.

2. POWER ON: Field lamp should blink and meter will indicate approximately the set point voltage indicated in the above table.

3. ADDITIONAL TEST:

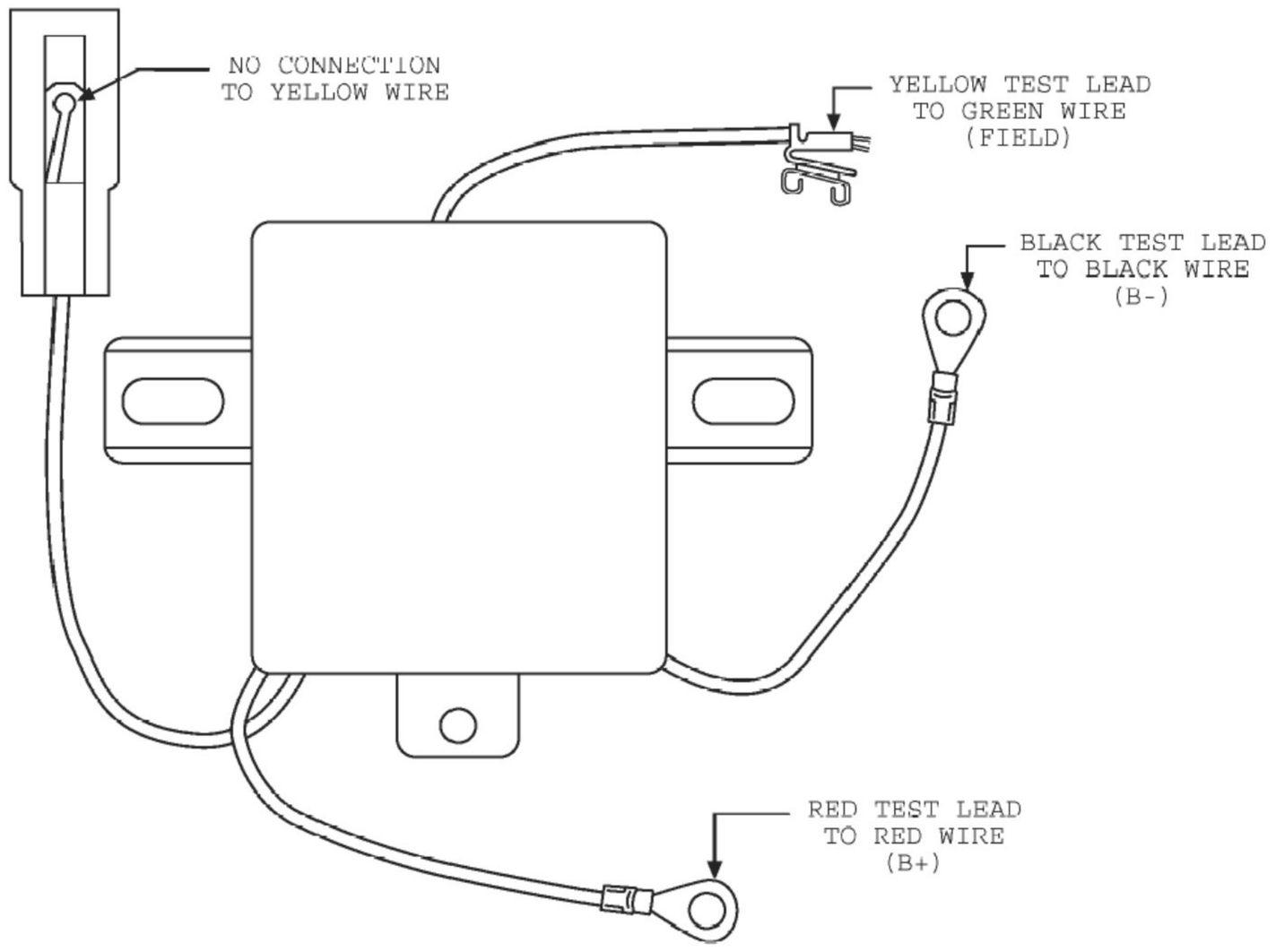

TRANSPO TESTER INSTRUCTIONS

for MOTOROLA type regulators

PART NO.	FLD	VOLT	SET POINT	PART NO.	FLD	VOLT	SET POINT
M5-151SA6	**B**	**6**	**7.8**	**M5-151SA32**	**B**	**32**	**37.5**
M5-151SA8	**B**	**8**	**9.6**				
M5-151SA12	**B**	**12**	**14.2**				
M5-151SA24	**B**	**24**	**27.5**				

1. POWER OFF: Set "Voltage Range" and "FLD" switches to desired setting. Connect the voltage regulator as indicated in the diagram below.

2. POWER ON: Field lamp should blink and meter will indicate approximately the set point voltage indicated in the above table.

3. ADDITIONAL TEST: Remove the white test lead from the yellow wire of the regulator marked "stator". Field lamp should turn off and the meter will indicate low voltage. On models with indicator light connection, removal of stator lead form regulator should cause the light to turn on and meter indicates low voltage.

NOTE * Not used fro 24v and 32v

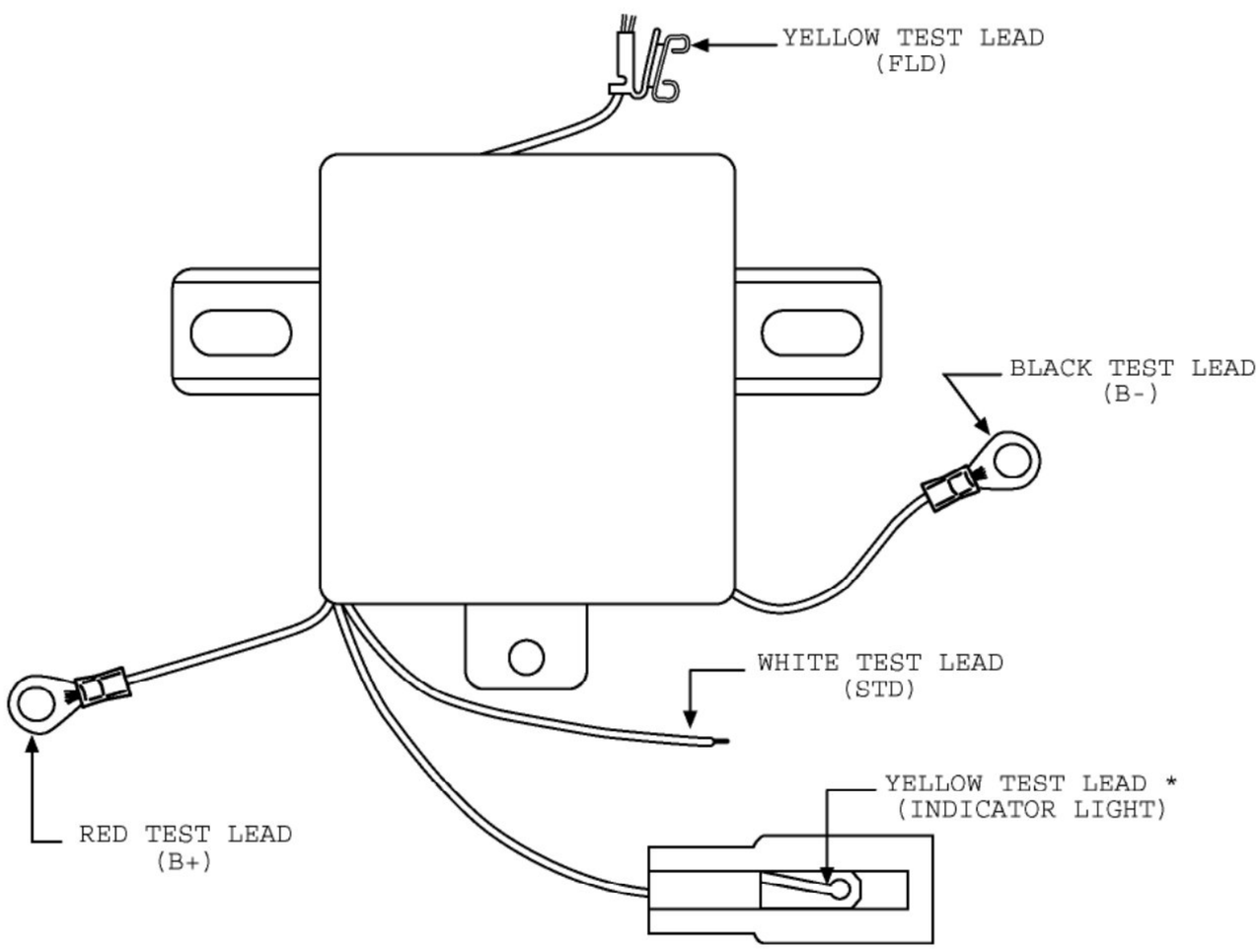

TRANSPO TESTER INSTRUCTIONS

for MOTOROLA type regulators

PART NO.	FLD	VOLT	SET POINT	PART NO.	FLD	VOLT	SET POINT
M5-26A	**B**	**12**	**15.2**	**M5-153A**	**B**	**12**	**15.0**
M5-27A	**B**	**24**	**29.2**	**M5-183A**	**B**	**24**	**29.2**
M5-92A	**B**	**12**	**15.2**				
M5-93A	**B**	**24**	**29.2**				

1. POWER OFF: Set "Voltage Range" and "FLD" switches to desired setting. Connect the voltage regulator as indicated in the diagram below.

2. POWER ON: Field lamp should blink and meter will indicate approximately the set point voltage indicated in the above table.

3. ADDITIONAL TEST:

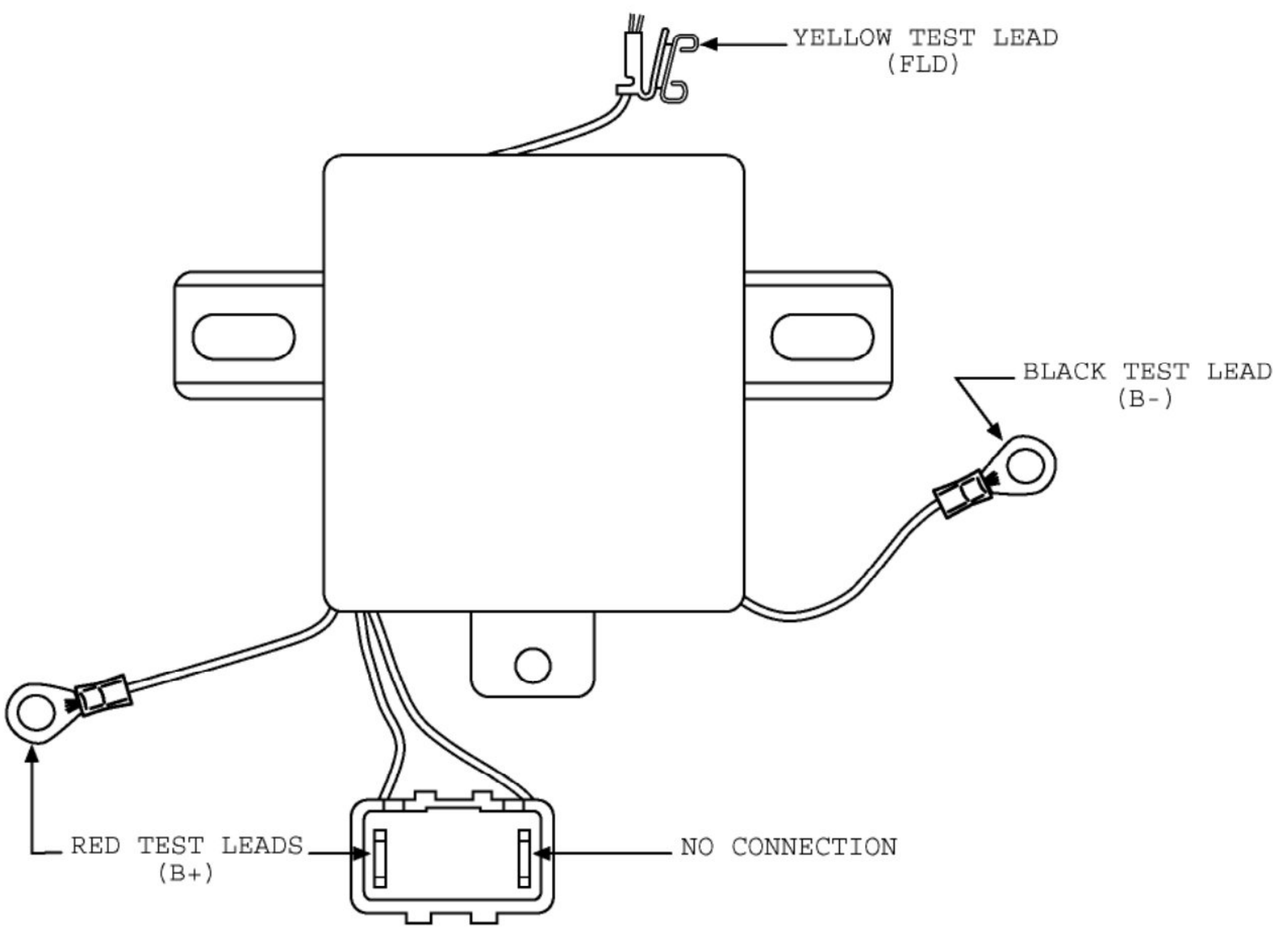

TRANSPO TESTER INSTRUCTIONS

for MOTOROLA type regulators

PART NO.	FLD	VOLT	SET POINT	PART NO.	FLD	VOLT	SET POINT
M5-104A	**A**	**12**	**14.2**				
M5-121A	**A**	**12**	**14.2**				
M5-125	**A**	**24**	**28.2**				
M5-179A	**A**	**24**	**28.4**				

1. POWER OFF: Set "Voltage Range" and "FLD" switches to desired setting. Connect the voltage regulator as indicated in the diagram below.

2. POWER ON: Field lamp should blink and meter will indicate approximately the set point voltage indicated in the above table.

3. ADDITIONAL TEST:

NOTE:
The above are "SCR" type regulators. They cannot be tested on Transpo's regulator tester due to a requirement of an adapter. To test them simply install them in the appropriate alternator and check for regulation.

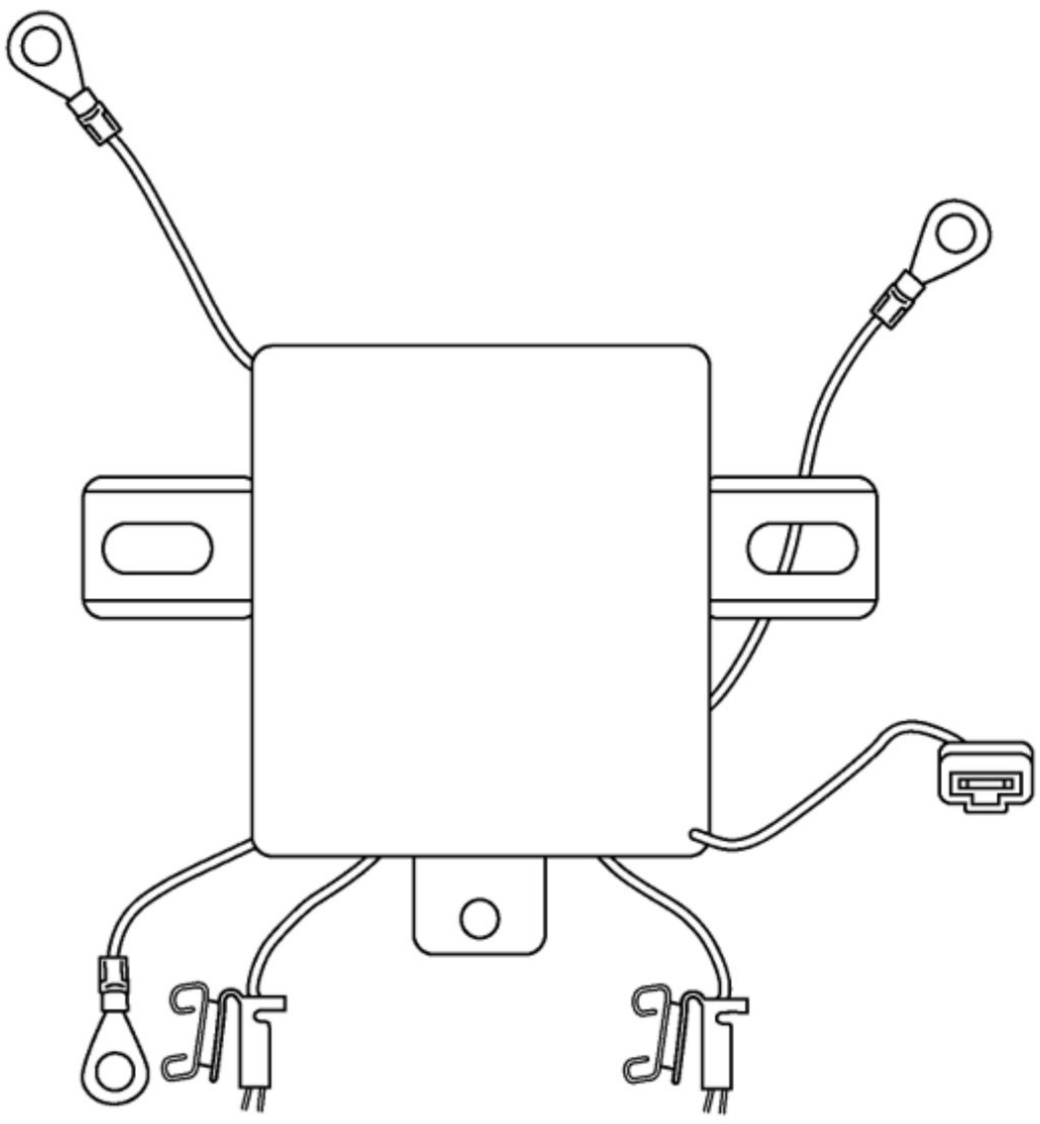

TRANSPO TESTER INSTRUCTIONS

for MOTOROLA type regulators

PART NO.	FLD	VOLT	SET POINT	PART NO.	FLD	VOLT	SET POINT
M5-164A	**B**	**24**	**28.4**				
M5-167A	**B**	**12**	**14.2**				

1. POWER OFF: Set "Voltage Range" and "FLD" switches to desired setting. Connect the voltage regulator as indicated in the diagram below.

2. POWER ON: Field lamp should blink and meter will indicate approximately the set point voltage indicated in the above table.

3. ADDITIONAL TEST:

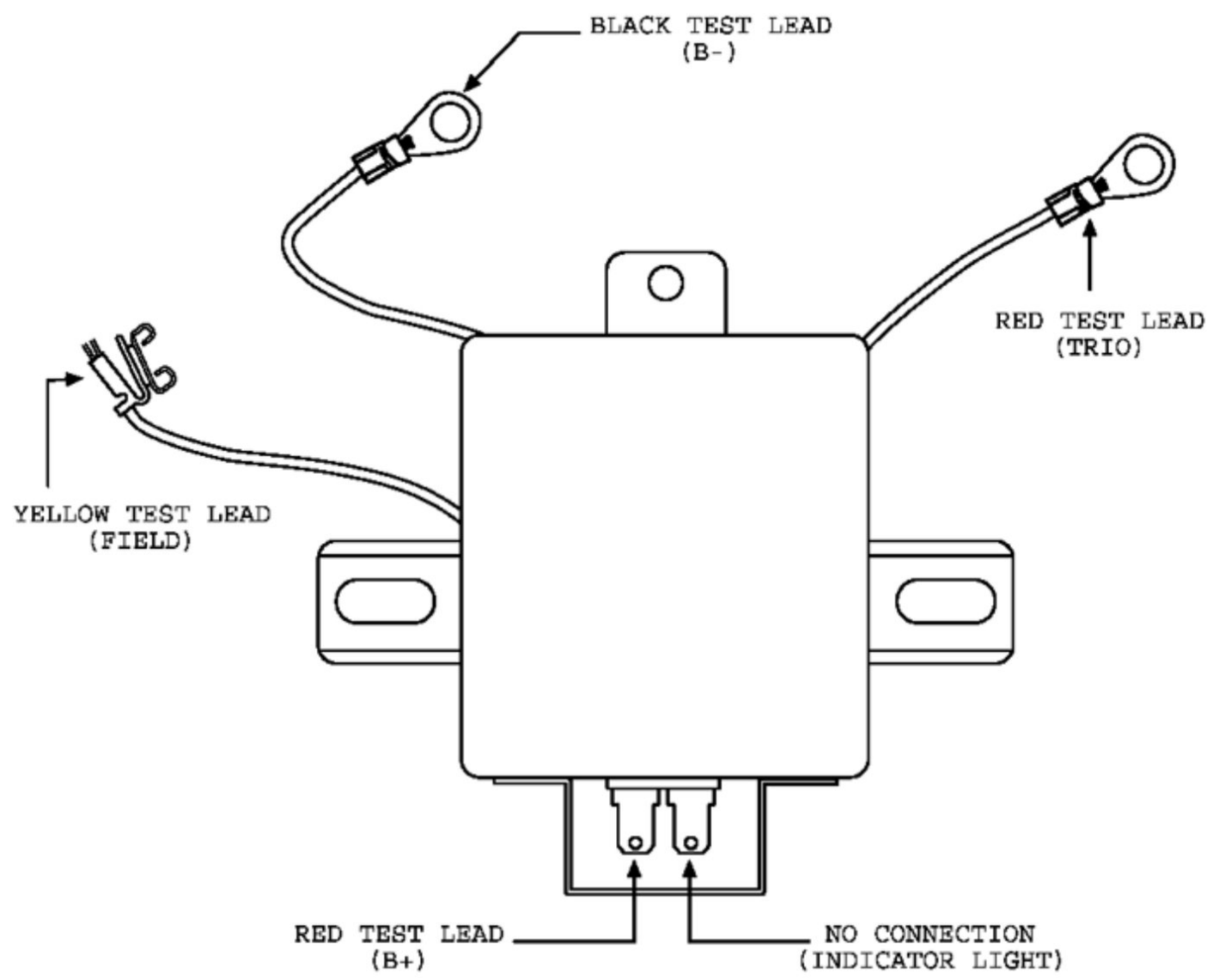

TRANSPO TESTER INSTRUCTIONS

for MOTOROLA type regulators

PART NO.	FLD	VOLT	SET POINT	PART NO.	FLD	VOLT	SET POINT
M5-265	**A**	**12**	**14.4**				
M5-266	**A**	**12**	**14.4**				
M5-269	**A**	**24**	**28.4**				
M5-270	**A**	**24**	**28.4**				

1. POWER OFF: Set "Voltage Range" and "FLD" switches to desired setting. Connect the voltage regulator as indicated in the diagram below.

2. POWER ON: Field lamp should blink and meter will indicate approximately the set point voltage indicated in the above table.

3. ADDITIONAL TEST:

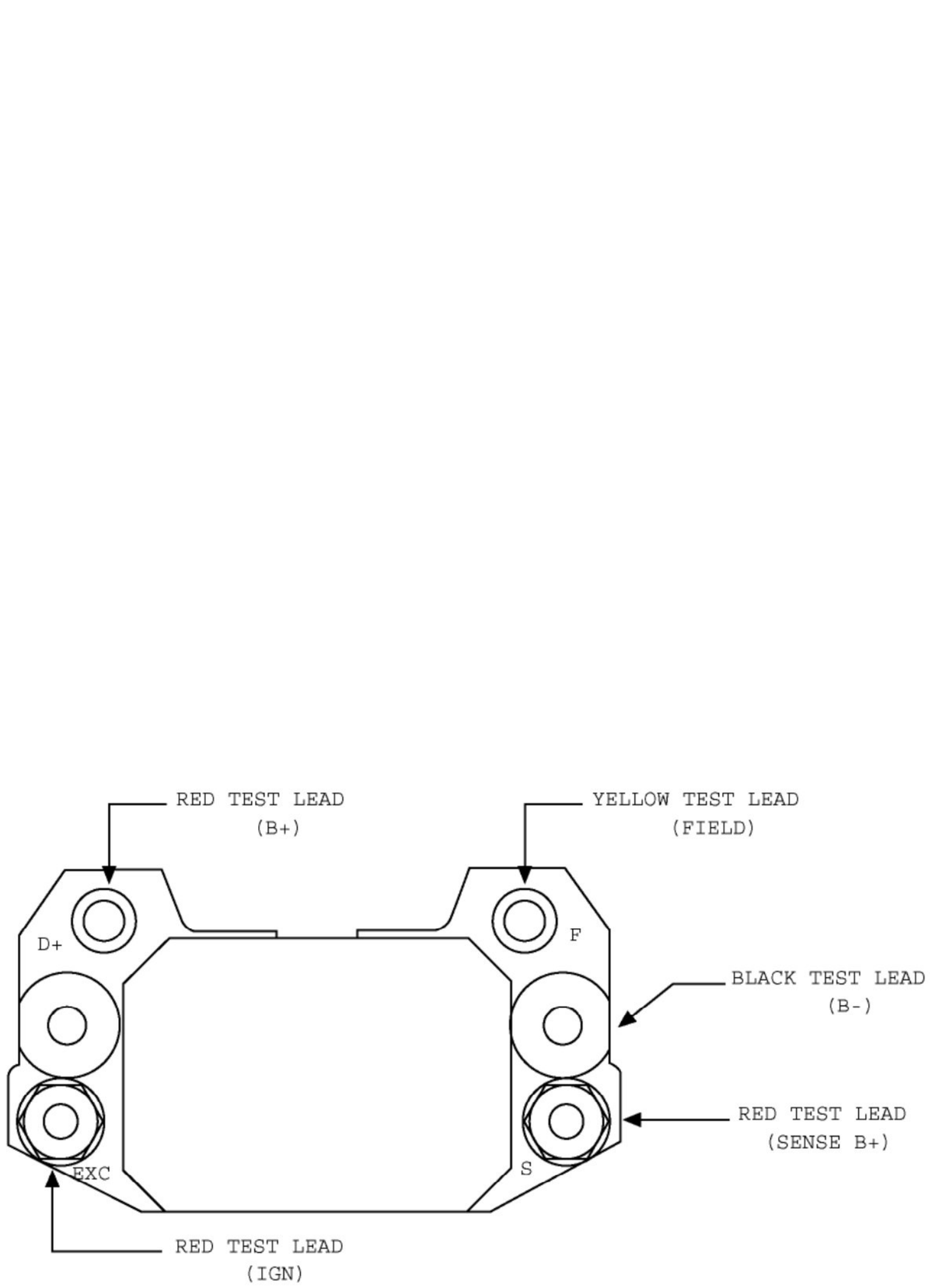

TRANSPO TESTER INSTRUCTIONS

for MOTOROLA type regulators

PART NO.	FLD	VOLT	SET POINT	PART NO.	FLD	VOLT	SET POINT
M5-123A	**A**	**24**	**28.0**				
M5-128A	**B**	**32**	**38.4**				
M5-234A	**B**	**12**	**14.2**				

1. POWER OFF: Set "Voltage Range" and "FLD" switches to desired setting. Connect the voltage regulator as indicated in the diagram below.

2. POWER ON: Field lamp should blink and meter will indicate approximately the set point voltage indicated in the above table.

3. ADDITIONAL TEST:

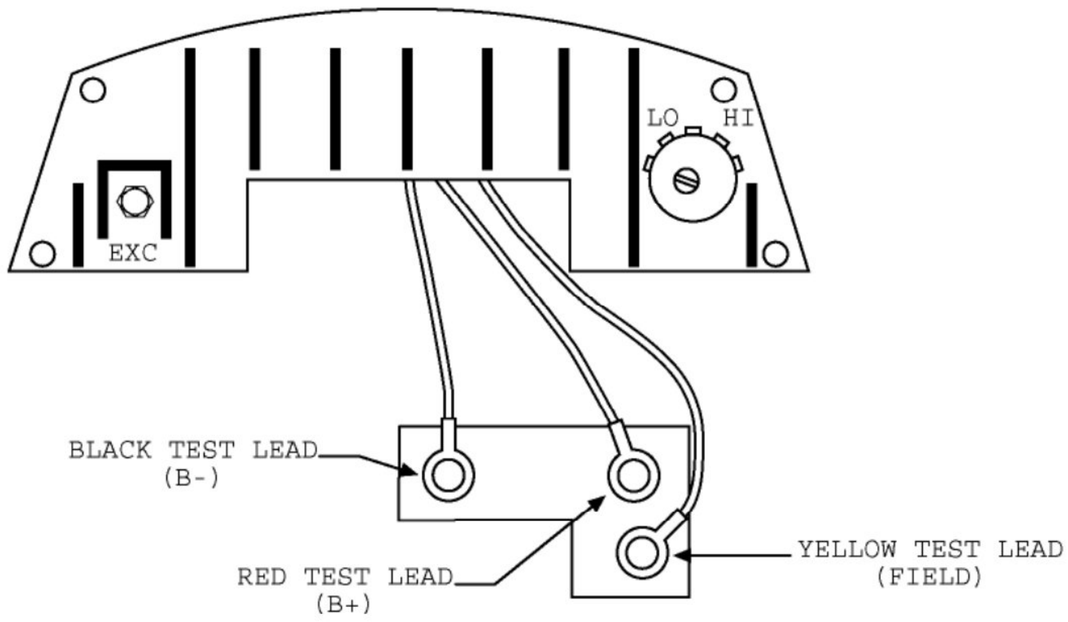

TRANSPO TESTER INSTRUCTIONS

for MOTOROLA type regulators

PART NO.	FLD	VOLT	SET POINT	PART NO.	FLD	VOLT	SET POINT
M5-158A	**B**	**24**	**29.2**				
M5-162A	**B**	**24**	**28.4**				
M5-166A	**B**	**24**	**28.4**				

1. POWER OFF: Set "Voltage Range" and "FLD" switches to desired setting. Connect the voltage regulator as indicated in the diagram below.

2. POWER ON: Field lamp should blink and meter will indicate approximately the set point voltage indicated in the above table.

3. ADDITIONAL TEST:

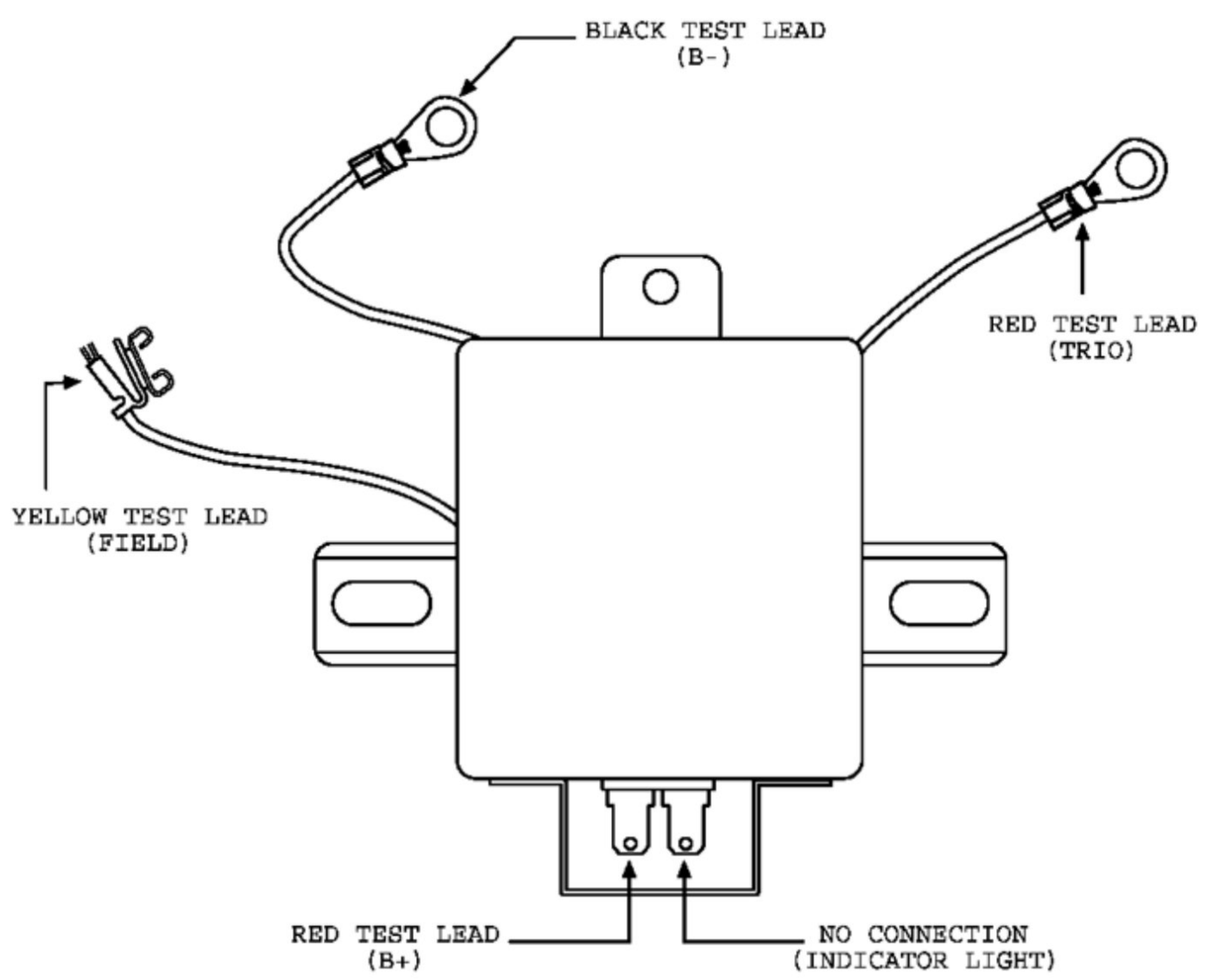

TRANSPO TESTER INSTRUCTIONS

for MOTOROLA type regulators

PART NO.	FLD	VOLT	SET POINT	PART NO.	FLD	VOLT	SET POINT
M5-160A	**B**	**24**	**29.1**				

1. POWER OFF: Set "Voltage Range" and "FLD" switches to desired setting. Connect the voltage regulator as indicated in the diagram below.

2. POWER ON: Field lamp should blink and meter will indicate approximately the set point voltage indicated in the above table.

3. ADDITIONAL TEST:

REGULATOR CONNECTION	TEST LEAD	FUNCTION
BLACK	BLACK	BATTERY NEGATIVE
RED	RED	TRIO, IGNITION, AUX
GREEN	YELLOW	FIELD
YELLOW	NO CONNECTION	

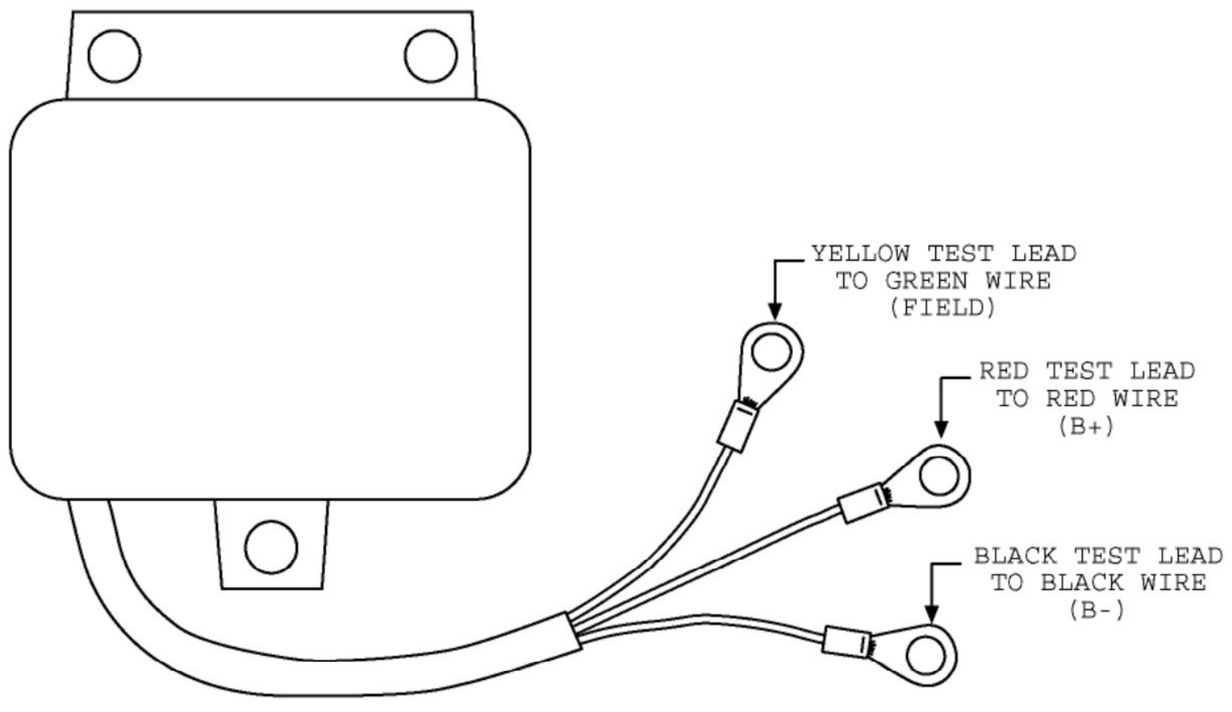

TRANSPO TESTER INSTRUCTIONS

for MOTOROLA type regulators

PART NO.	FLD	VOLT	SET POINT	PART NO.	FLD	VOLT	SET POINT
M5-165A	**B**	**12**	**14.4**				

1. POWER OFF: Set "Voltage Range" and "FLD" switches to desired setting. Connect the voltage regulator as indicated in the diagram below.

2. POWER ON: Field lamp should blink and meter will indicate approximately the set point voltage indicated in the above table.

3. ADDITIONAL TEST:

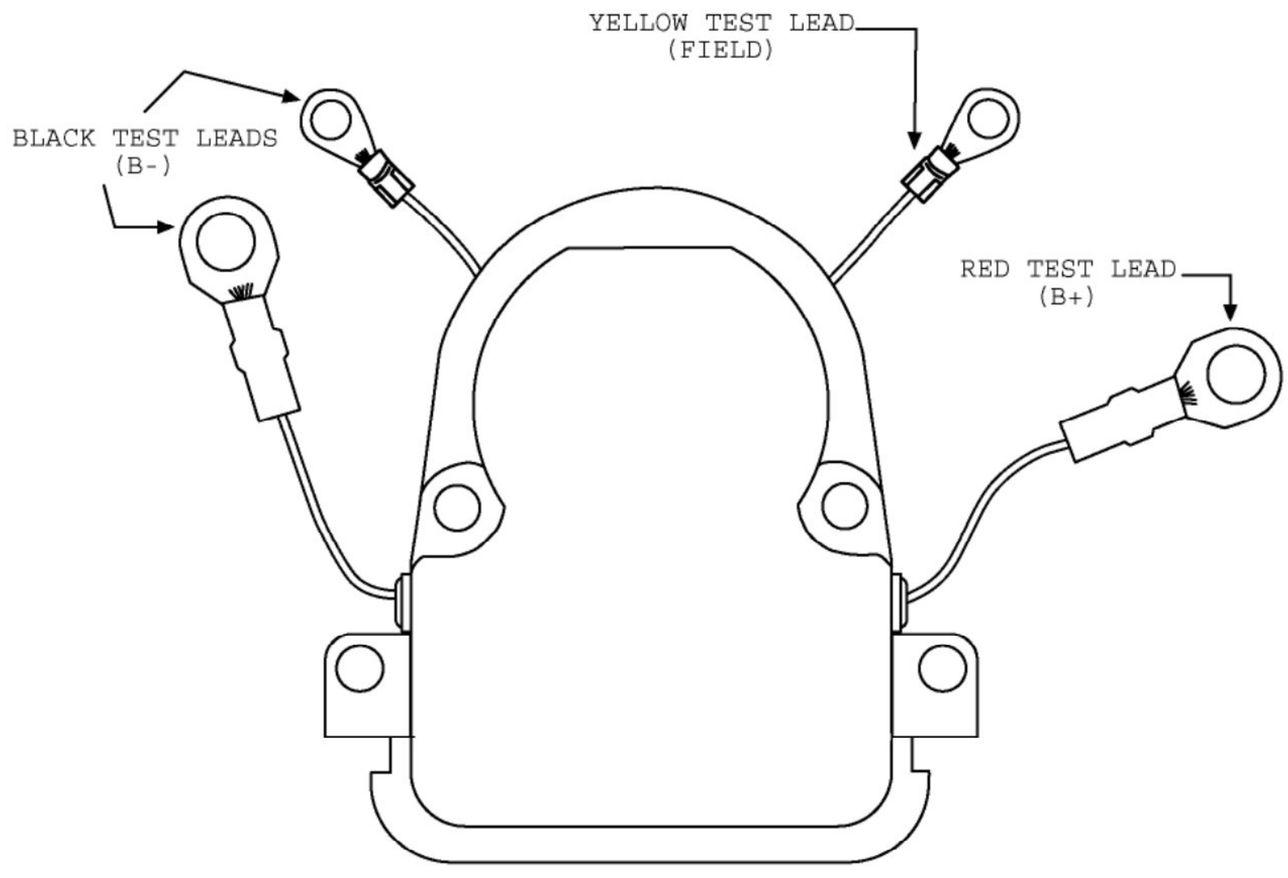

TRANSPO TESTER INSTRUCTIONS

for MOTOROLA type regulators

PART NO.	FLD	VOLT	SET POINT	PART NO.	FLD	VOLT	SET POINT
M5-251	**A**	**24**	**26.5**				

1. POWER OFF: Set "Voltage Range" and "FLD" switches to desired setting. Connect the voltage regulator as indicated in the diagram below.

2. POWER ON: Field lamp should blink and meter will indicate approximately the set point voltage indicated in the above table.

3. ADDITIONAL TEST: DO NOT CONNECT BOTH SENSE LEADS AT THE SAME TIME.

VSET1-DISCONECT SENSE (PURPLE LEAD) VOLTAGE REGULATION IS (28.00V+/-.5V)

VSET2-CONNECT REGULATOR AS SHOWN. USE RESISTOR (5K OHM). VOLTAGE REGULATION (26.5V+/-.5V)

VSET3-CONNECT REGULATOR AS SHOWN. USE RESISTOR (3K OHM). VOLTAGE REGULATION (26.0V+/-.5V)

NOTE: THE VOLTAGE IS BELOW METER RANGE WITHOUT USING A RESISTOR ON YELLOW WIRE. REGULATOR IS FACTORY SET AT 26.5V. WE DO NOT RECOMMEND TURNING VARIABLE RESISTOR UNTIL INSTALLED ON VEHICLE.

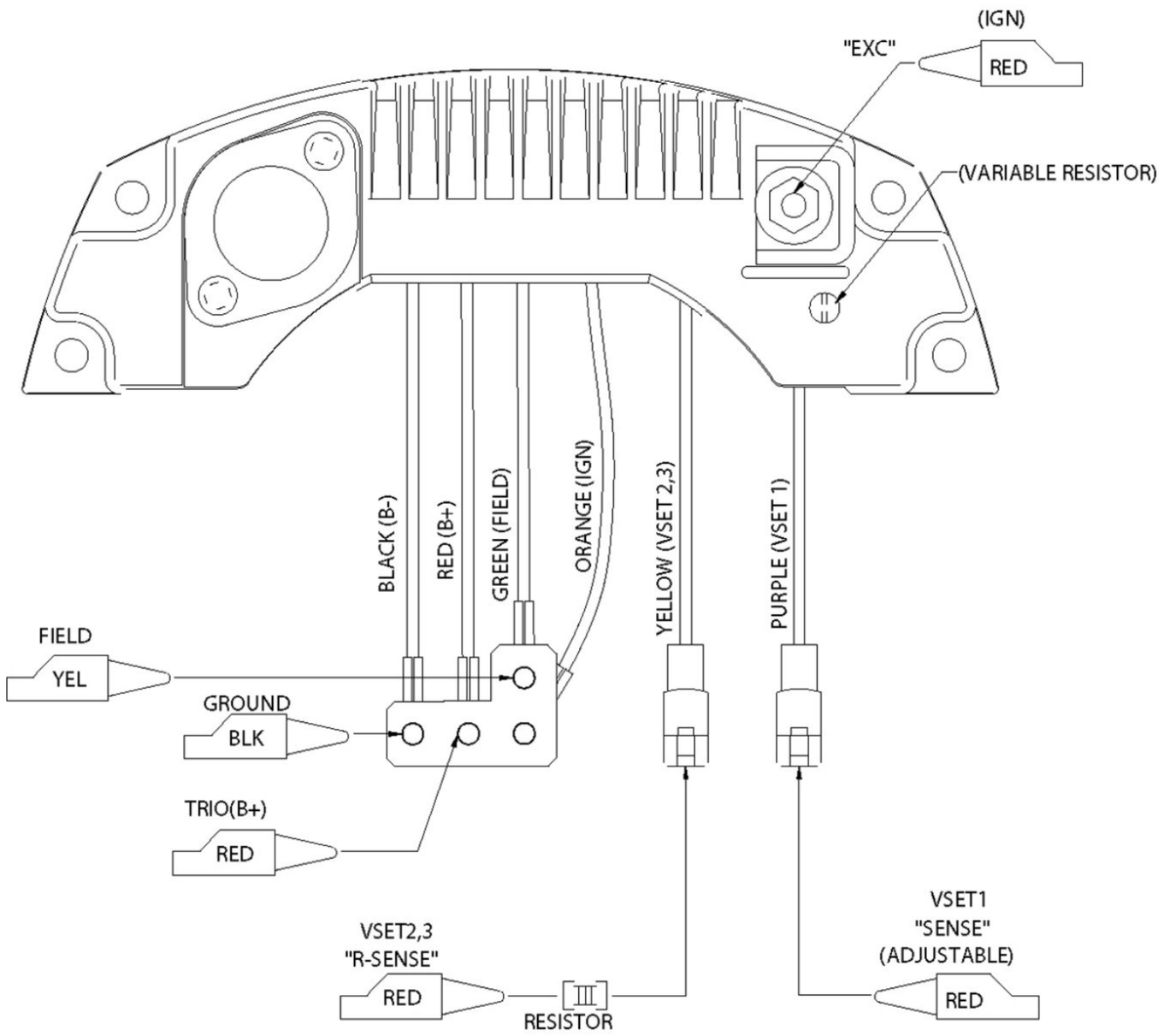

TRANSPO TESTER INSTRUCTIONS

for NIEHOFF type regulators

PART NO.	FLD	VOLT	SET POINT	PART NO.	FLD	VOLT	SET POINT
NA2-101	**A**	**24**	**27.5**				
NA2-102	**A**	**12**	**14.2**				
NA2-103	**A**	**32**	**37.5**				

1. POWER OFF: Set "Voltage Range" and "FLD" switches to desired setting. Connect the voltage regulator as indicated in the diagram below.

2. POWER ON: Field lamp should blink and meter will indicate approximately the set point voltage indicated in the above table.

3. ADDITIONAL TEST:

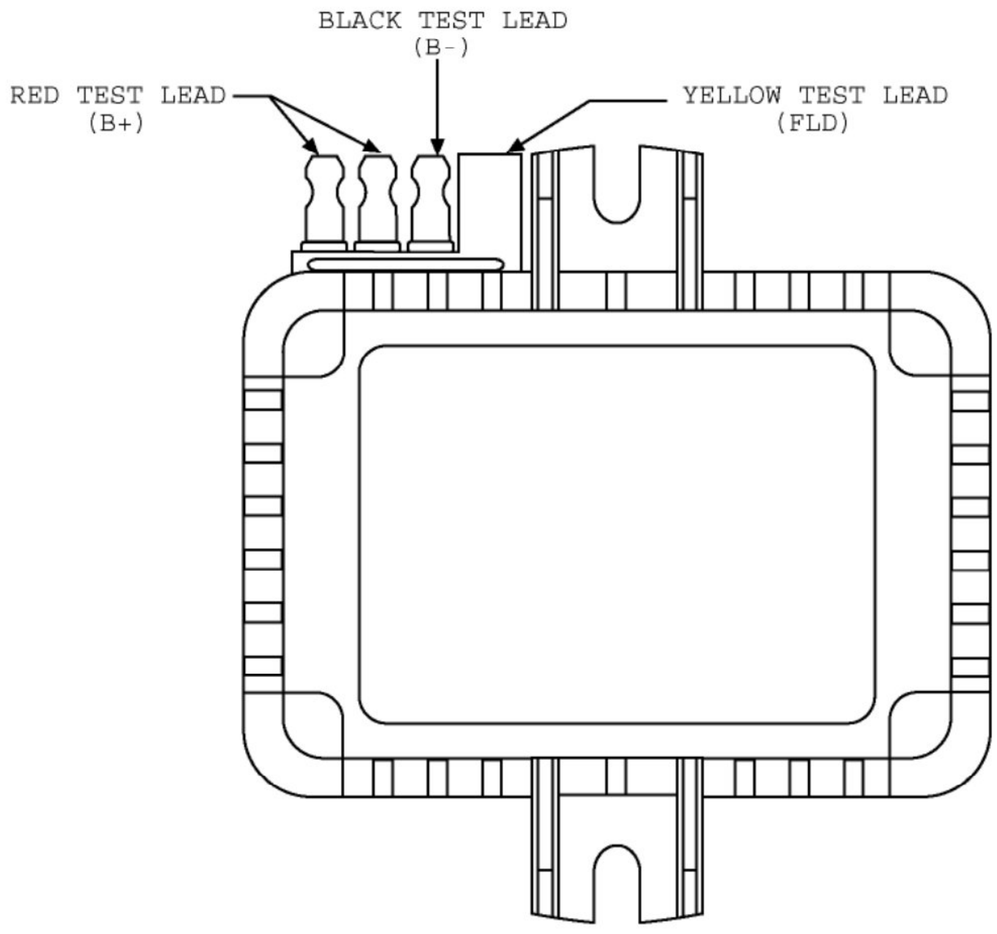

TRANSPO TESTER INSTRUCTIONS

for NIEHOFF type regulators

PART NO.	FLD	VOLT	SET POINT	PART NO.	FLD	VOLT	SET POINT
N9013	**A**	**12**	**14.3**				
N9015	**A**	**24**	**27.5**				

1. POWER OFF: Set "Voltage Range" and "FLD" switches to desired setting. Connect the voltage regulator as indicated in the diagram below.

2. POWER ON: Field lamp should blink and meter will indicate approximately the set point voltage indicated in the above table.

3. ADDITIONAL TEST: Remove white test lead from blue wire of the regulator. Field lamp should turn off and the meter will indicate low voltage.

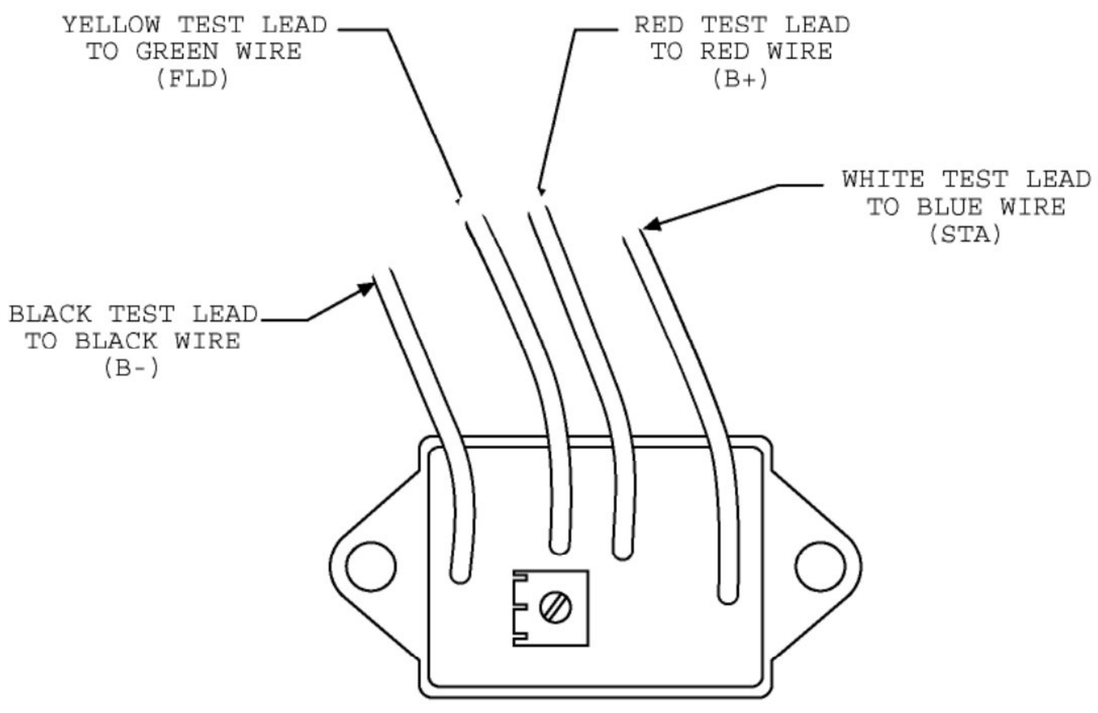

TRANSPO TESTER INSTRUCTIONS

for NIEHOFF type regulators

PART NO.	FLD	VOLT	SET POINT	PART NO.	FLD	VOLT	SET POINT
N9014	**A**	**12**	**14.2**				

1. POWER OFF: Set "Voltage Range" and "FLD" switches to desired setting. Connect the voltage regulator as indicated in the diagram below.

2. POWER ON: Field lamp should blink and meter will indicate approximately the set point voltage indicated in the above table.

3. ADDITIONAL TEST: Remove white test lead from blue wire of the regulator. Field lamp should turn off and the meter will indicate low voltage and indicator light will turn on.

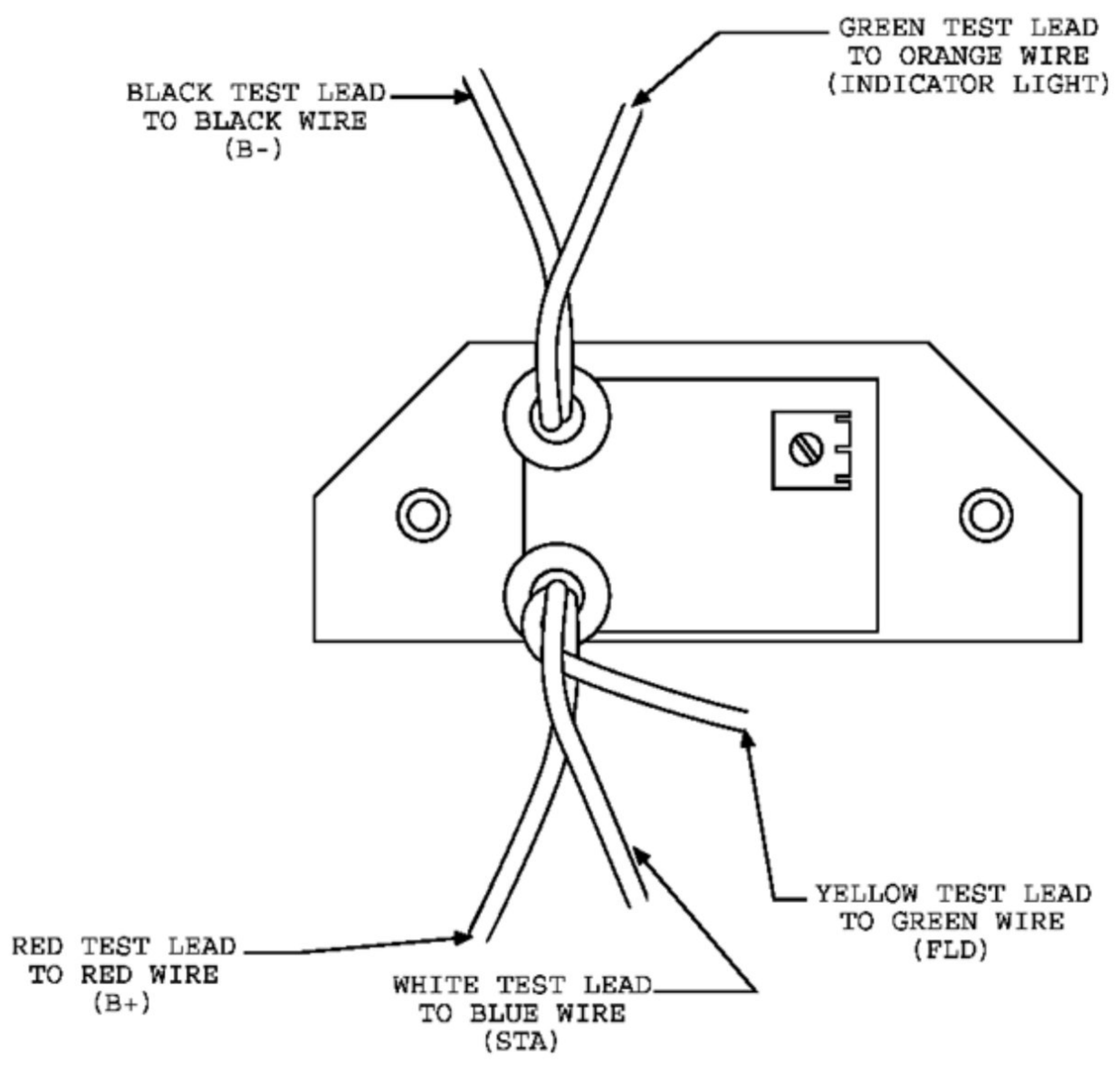

TRANSPO TESTER INSTRUCTIONS

for NIEHOFF type regulators

PART NO.	FLD	VOLT	SET POINT	PART NO.	FLD	VOLT	SET POINT
A2-405	**A**	**12**	**14.5**				
A2-115	**A**	**12**	**14.5**				

1. POWER OFF: Set "Voltage Range" and "FLD" switches to desired setting. Connect the voltage regulator as indicated in the diagram below.

2. POWER ON: Field lamp should blink and meter will indicate approximately the set point voltage indicated in the above table.

3. ADDITIONAL TEST:

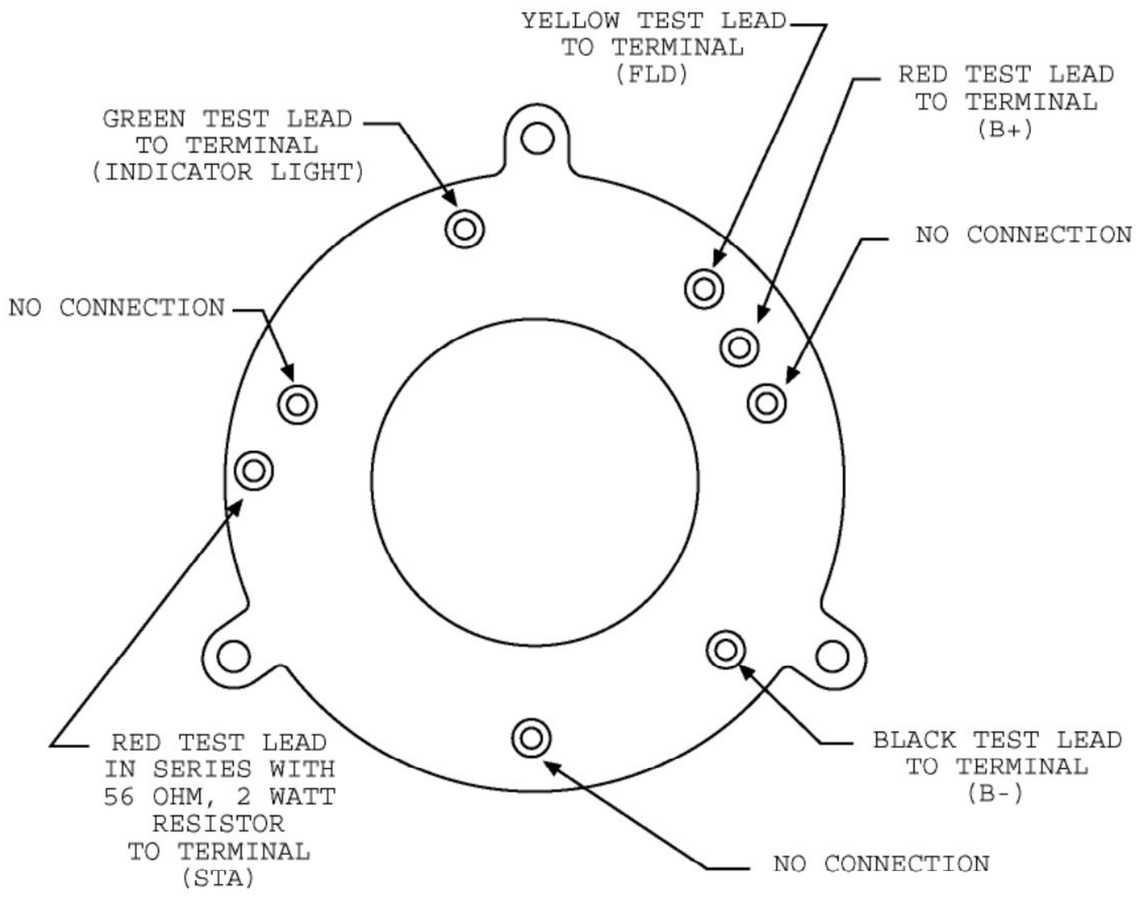

TRANSPO TESTER INSTRUCTIONS

for NIEHOFF type regulators

PART NO.	FLD	VOLT	SET POINT	PART NO.	FLD	VOLT	SET POINT
A2-404	**A**	**12**	**14.5**				
A2-420	**A**	**12**	**14.5**				
A2-421	**A**	**12**	**14.5**				

1. POWER OFF: Set "Voltage Range" and "FLD" switches to desired setting. Connect the voltage regulator as indicated in the diagram below.

2. POWER ON: Field lamp should blink and meter will indicate approximately the set point voltage indicated in the above table.

3. ADDITIONAL TEST:

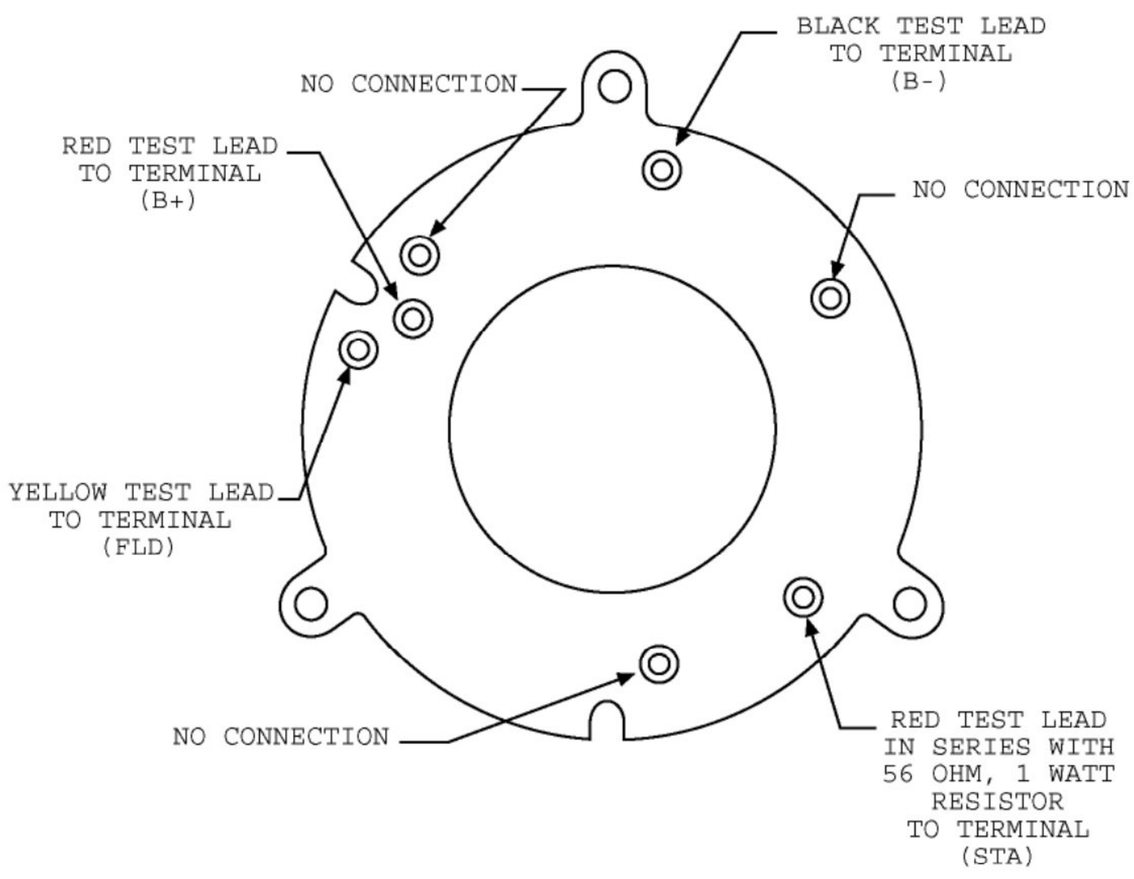

TRANSPO TESTER INSTRUCTIONS

for NIEHOFF type regulators

PART NO.	FLD	VOLT	SET POINT	PART NO.	FLD	VOLT	SET POINT
A2-150	**A**	**12**	**14.5**				
A2-157	**A**	**24**	**27.5**				
A2-15803	**A**	**32**	**37.5**				

1. POWER OFF: Set "Voltage Range" and "FLD" switches to desired setting. Connect the voltage regulator as indicated in the diagram below.

2. POWER ON: Field lamp should blink and meter will indicate approximately the set point voltage indicated in the above table.

3. ADDITIONAL TEST:

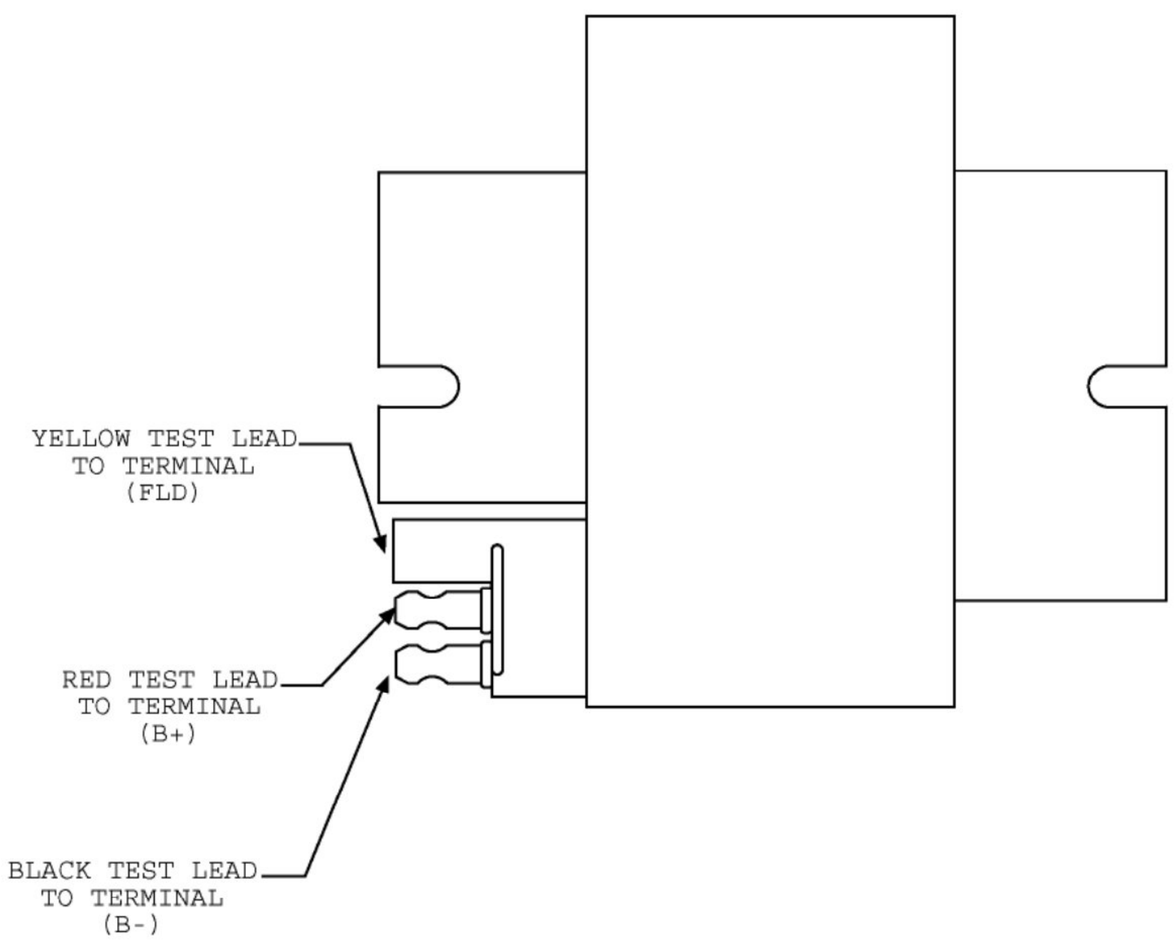

TRANSPO TESTER INSTRUCTIONS

for NIEHOFF type regulators

PART NO.	FLD	VOLT	SET POINT	PART NO.	FLD	VOLT	SET POINT
A2-406	**A**	**12**	**14.2**				

1. POWER OFF: Set "Voltage Range" and "FLD" switches to desired setting. Connect the voltage regulator as indicated in the diagram below.

2. POWER ON: Field lamp should blink and meter will indicate approximately the set point voltage indicated in the above table.

3. ADDITIONAL TEST:

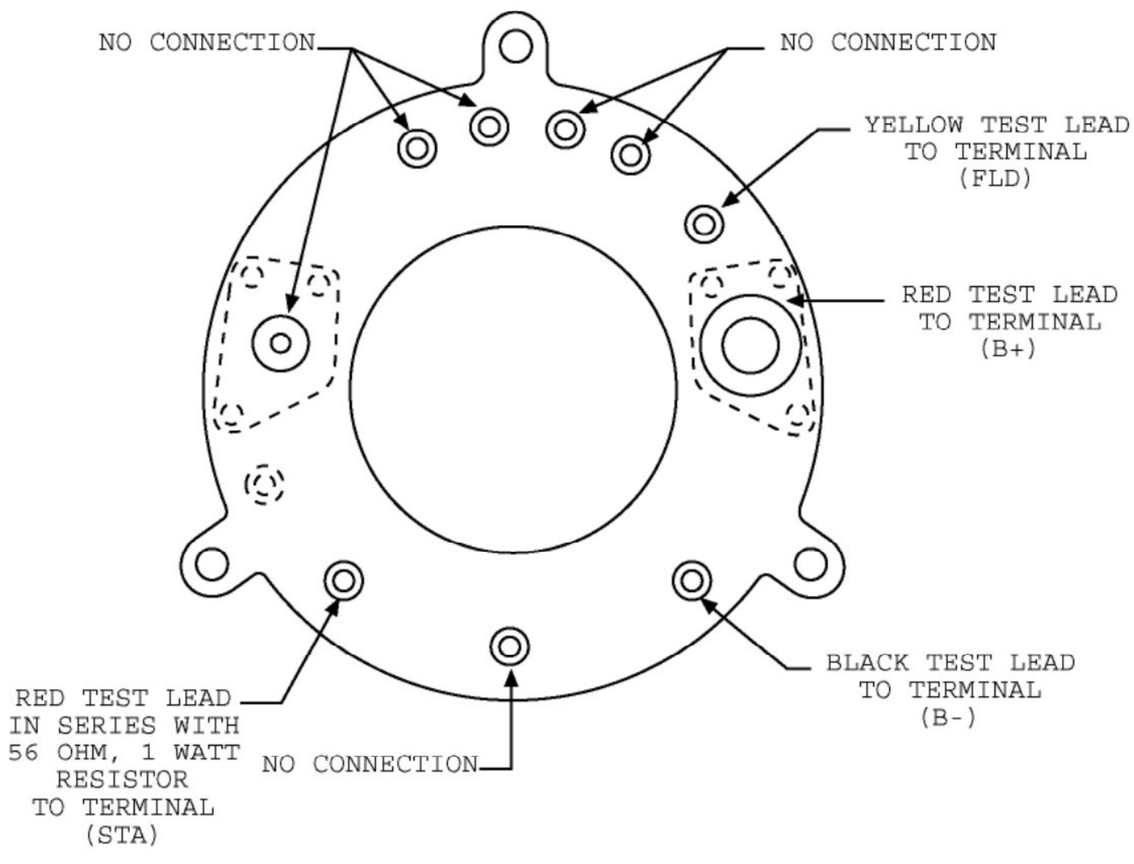

TRANSPO TESTER INSTRUCTIONS

for NIEHOFF type regulators

PART NO.	FLD	VOLT	SET POINT	PART NO.	FLD	VOLT	SET POINT
A2-402	**A**	**24**	**27.5**				

1. POWER OFF: Set "Voltage Range" and "FLD" switches to desired setting. Connect the voltage regulator as indicated in the diagram below.

2. POWER ON: Field lamp should blink and meter will indicate approximately the set point voltage indicated in the above table.

3. ADDITIONAL TEST:

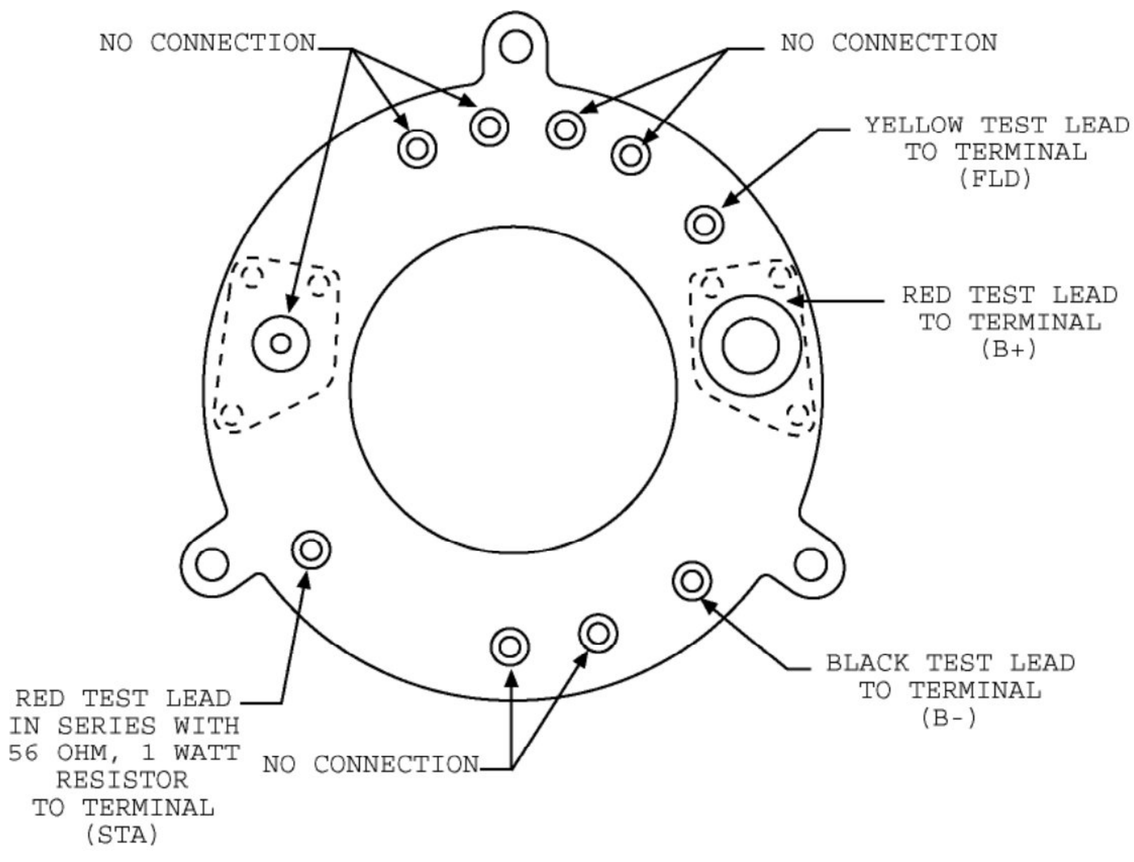

TRANSPO TESTER INSTRUCTIONS

for NIEHOFF type regulators

PART NO.	FLD	VOLT	SET POINT	PART NO.	FLD	VOLT	SET POINT
A2-104	**A**	**24**	**27.5**				
A2-107	**A**	**24**	**27.5**				
A2-702	**A**	**12**	**14.2**				
A2-704	**A**	**12**	**14.2**				

1. POWER OFF: Set "Voltage Range" and "FLD" switches to desired setting. Connect the voltage regulator as indicated in the diagram below.

2. POWER ON: Field lamp should blink and meter will indicate approximately the set point voltage indicated in the above table.

3. ADDITIONAL TEST:

* NOTE: This resistor must be used for testing purposes, else regulator will be damaged.

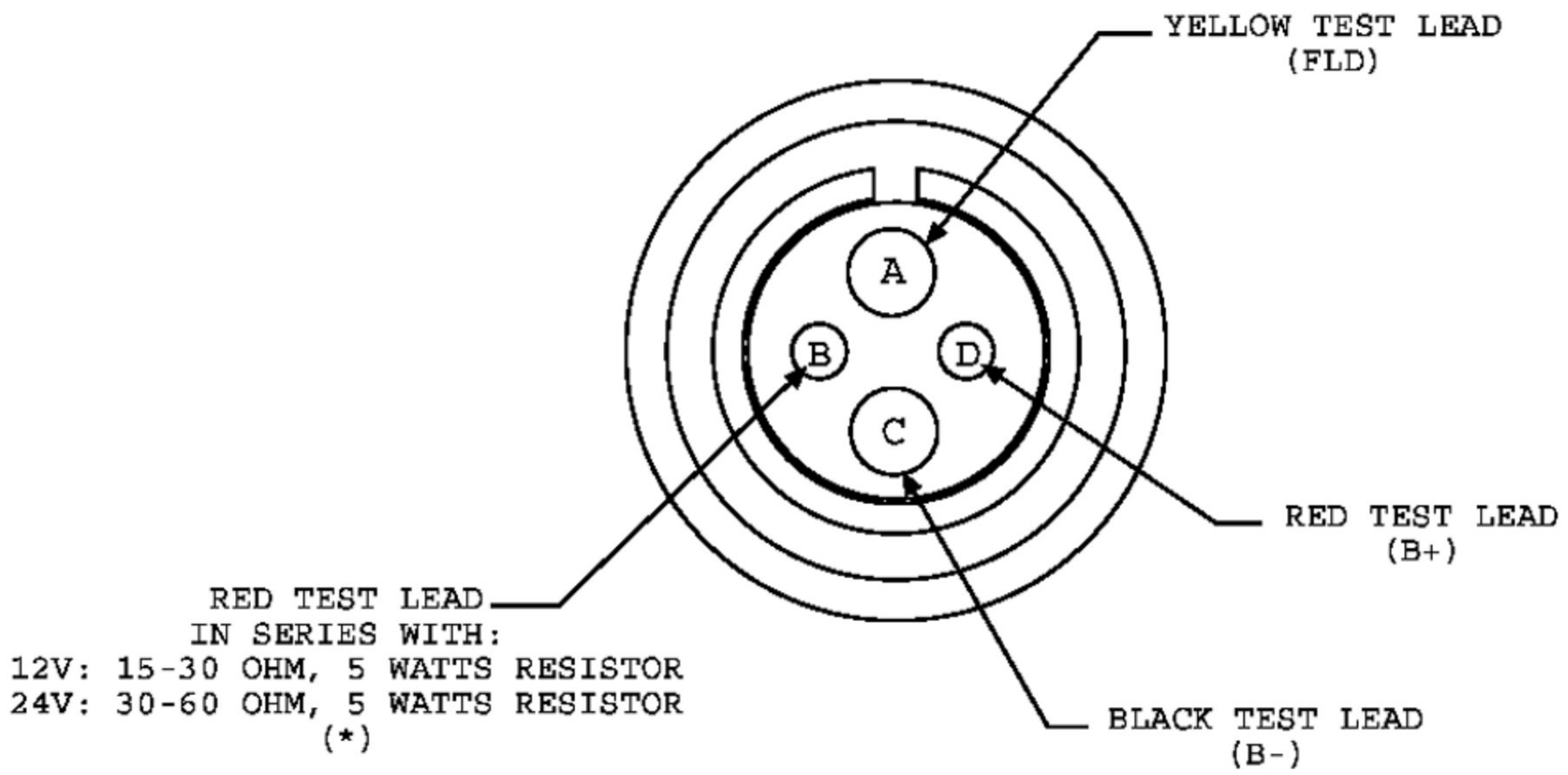

TRANSPO TESTER INSTRUCTIONS

for NIEHOFF type regulators

PART NO.	FLD	VOLT	SET POINT	PART NO.	FLD	VOLT	SET POINT
NA2-111	**A**	**24**	**28.0**				
NA2-110	**A**	**12**	**14.0**				

1. POWER OFF: Set "Voltage Range" and "FLD" switches to desired setting. Connect the voltage regulator as indicated in the diagram below.

2. POWER ON: Field lamp should blink and meter will indicate approximately the set point voltage indicated in the above table.

3. ADDITIONAL TEST: Remove red test lead from the terminal marked "IGNITION". Field lamp should turn off and the meter will indicate approximately 12V. For NA2-111. For NA2-110.

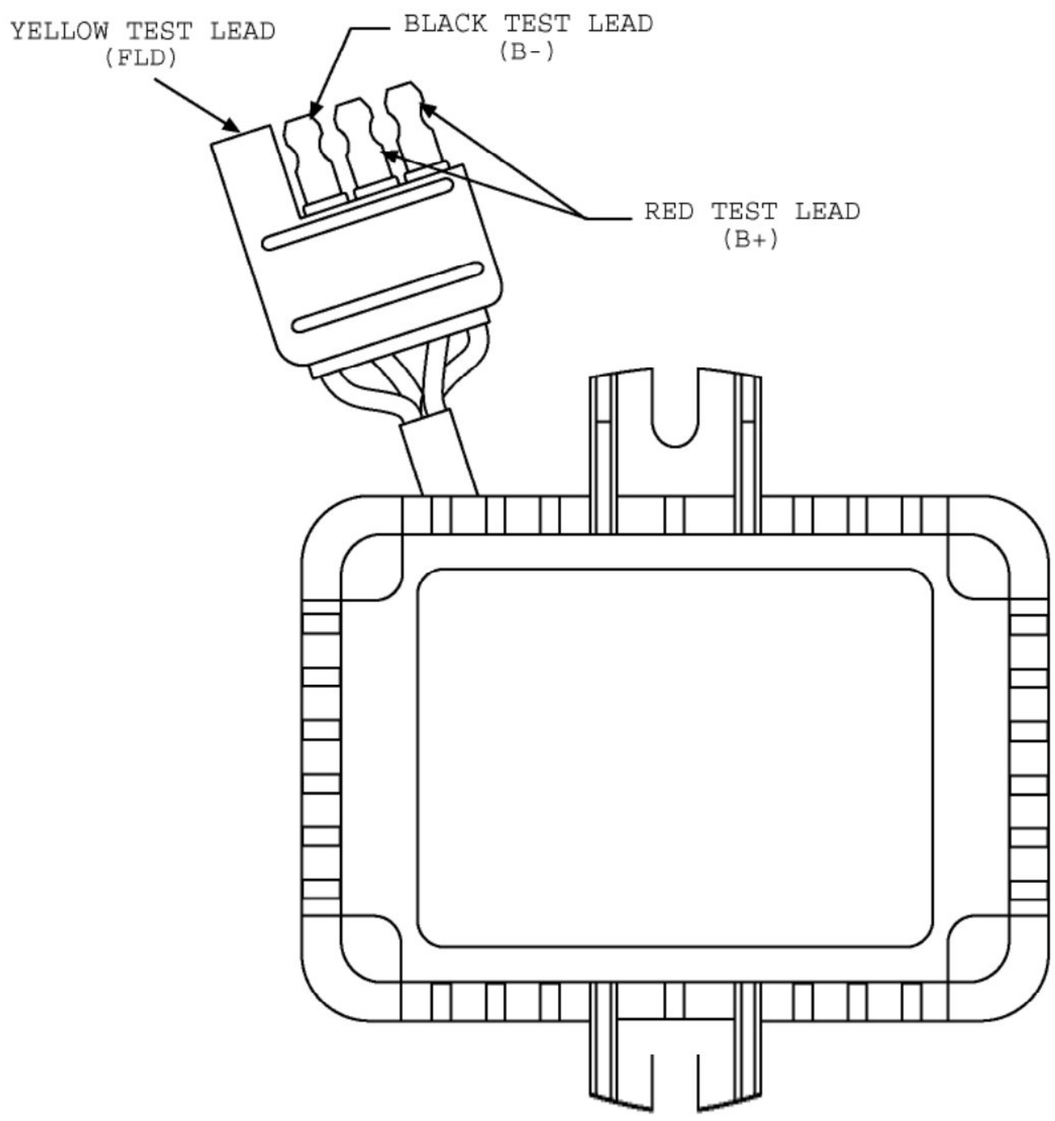

TRANSPO TESTER INSTRUCTIONS

for NIKKO type regulators

PART NO.	FLD	VOLT	SET POINT	PART NO.	FLD	VOLT	SET POINT
IZ226	**A**	**24**	**27.5**				
IZ227	**A**	**12**	**14.6**				

1. POWER OFF: Set "Voltage Range" and "FLD" switches to desired setting. Connect the voltage regulator as indicated in the diagram below.

2. POWER ON: Field lamp should blink and meter will indicate approximately the set point voltage indicated in the above table.

3. ADDITIONAL TEST:

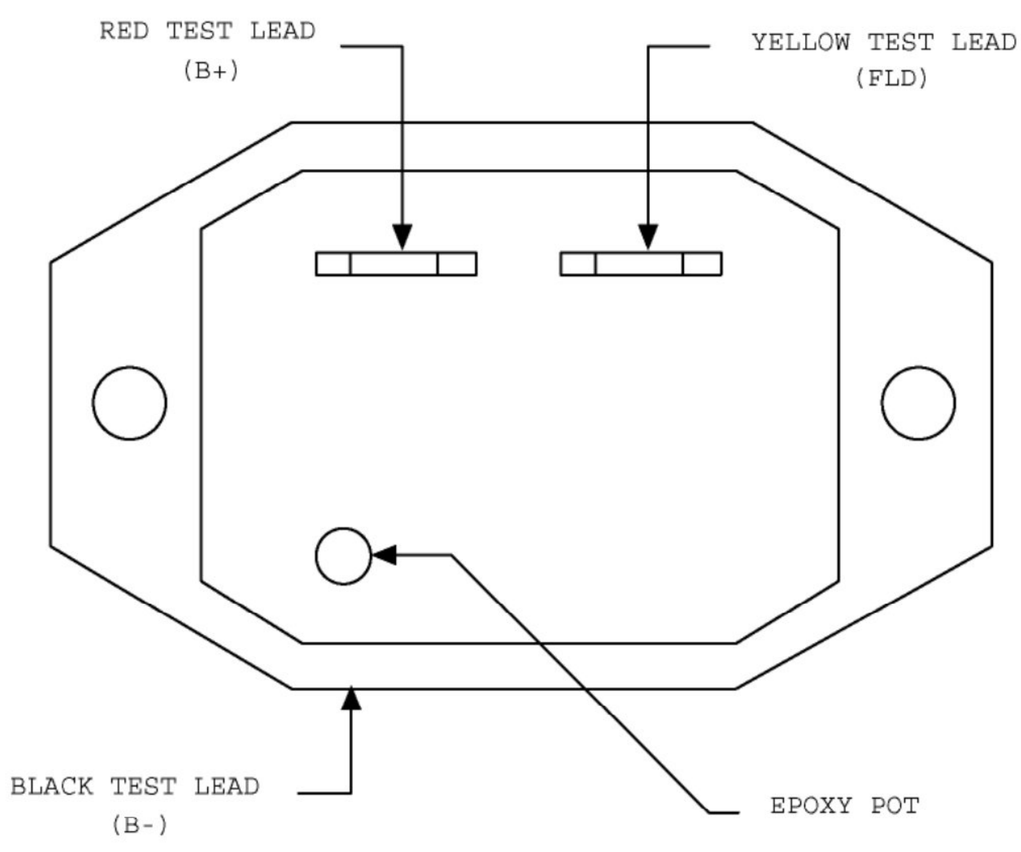

TRANSPO TESTER INSTRUCTIONS

for NIKKO type regulators

PART NO.	FLD	VOLT	SET POINT	PART NO.	FLD	VOLT	SET POINT
IZ228	**A**	**24**	**28.3**				

1. POWER OFF: Set "Voltage Range" and "FLD" switches to desired setting. Connect the voltage regulator as indicated in the diagram below.

2. POWER ON: Field lamp should blink and meter will indicate approximately the set point voltage indicated in the above table.

3. ADDITIONAL TEST:

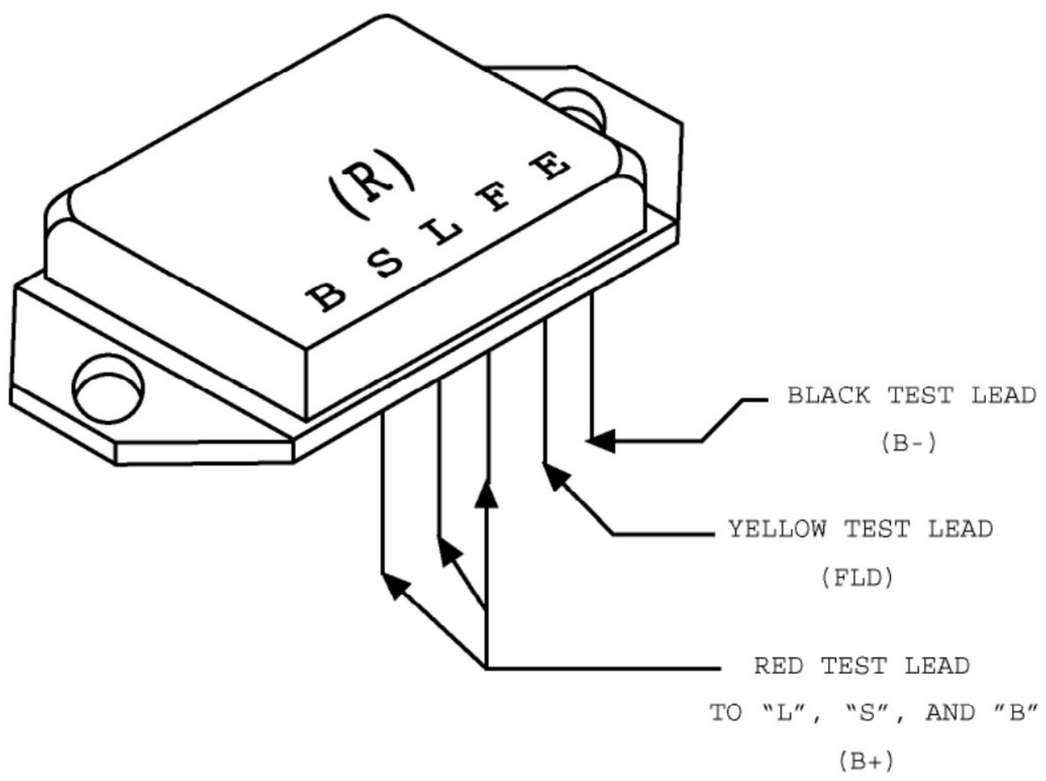

TRANSPO TESTER INSTRUCTIONS

for NIPPONDENSO type regulators

PART NO.	FLD	VOLT	SET POINT	PART NO.	FLD	VOLT	SET POINT
IN209	**A**	**12**	**14.5**				
IN210	**A**	**12**	**14.5**				

1. POWER OFF: Set "Voltage Range" and "FLD" switches to desired setting. Connect the voltage regulator as indicated in the diagram below.

2. POWER ON: Field lamp should blink and meter will indicate approximately the set point voltage indicated in the above table.

3. ADDITIONAL TEST:

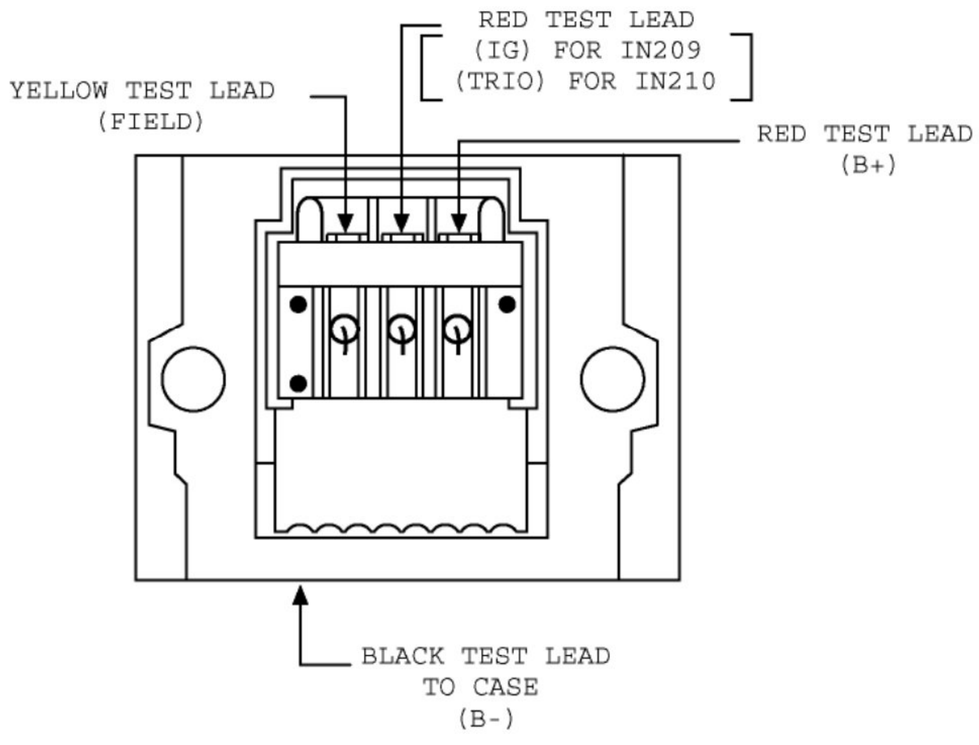

TRANSPO TESTER INSTRUCTIONS

for NIPPONDENSO type regulators

PART NO.	FLD	VOLT	SET POINT	PART NO.	FLD	VOLT	SET POINT
IN234	**A**	**12**	**14.3**				

1. POWER OFF: Set "Voltage Range" and "FLD" switches to desired setting. Connect the voltage regulator as indicated in the diagram below.

2. POWER ON: Field lamp should blink and meter will indicate approximately the set point voltage indicated in the above table.

3. ADDITIONAL TEST: Remove red test lead from terminal marked "S". Field lamp will still blink, and the meter will indicate approximately 15.0V.

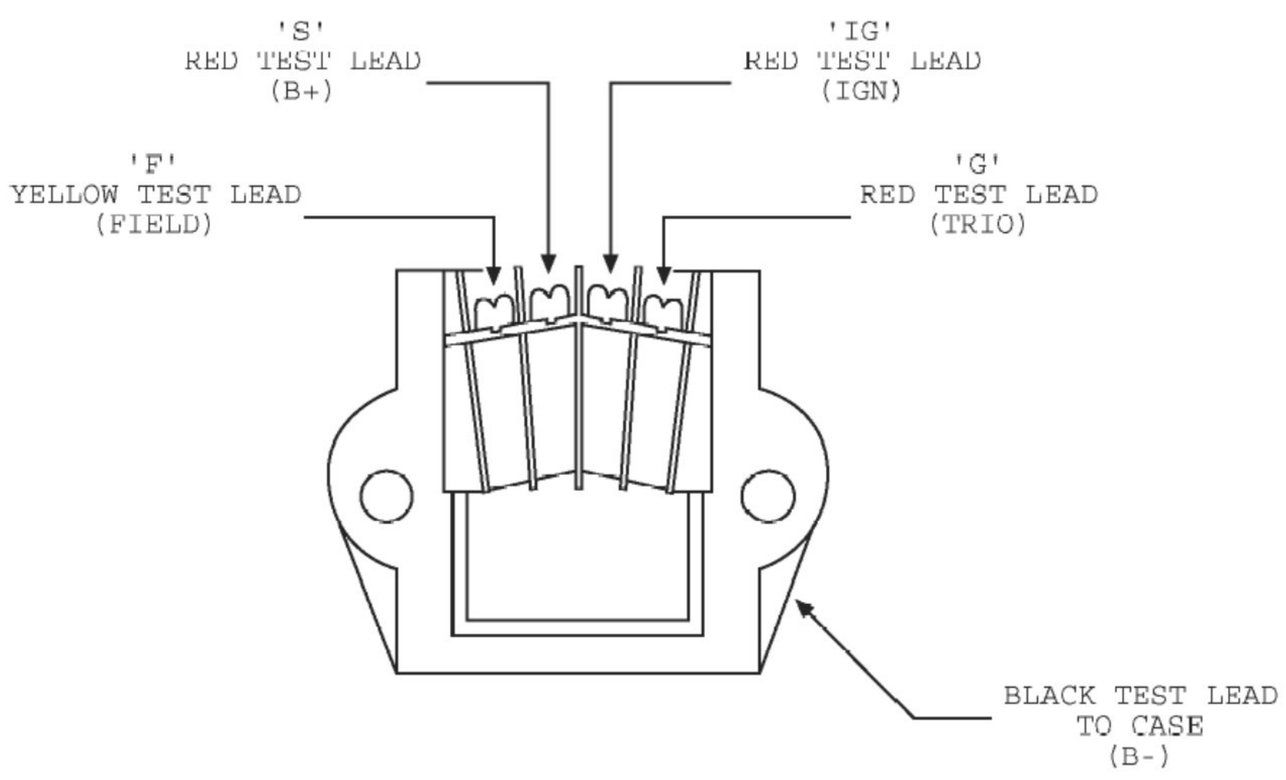

TRANSPO TESTER INSTRUCTIONS

for NIPPONDENSO type regulators

PART NO.	FLD	VOLT	SET POINT	PART NO.	FLD	VOLT	SET POINT
IN229	**A**	**12**	**14.1**				
IN229HD	**A**	**12**	**14.1**				

1. POWER OFF: Set "Voltage Range" and "FLD" switches to desired setting. Connect the voltage regulator as indicated in the diagram below.

2. POWER ON: Field lamp should blink and meter will indicate approximately the set point voltage indicated in the above table.

3. ADDITIONAL TEST:

NOTE: When testing the Transpo IN229 or the Original Equipment voltage regulators, the short circuit light may flash and the meter will indicate the set point voltage.

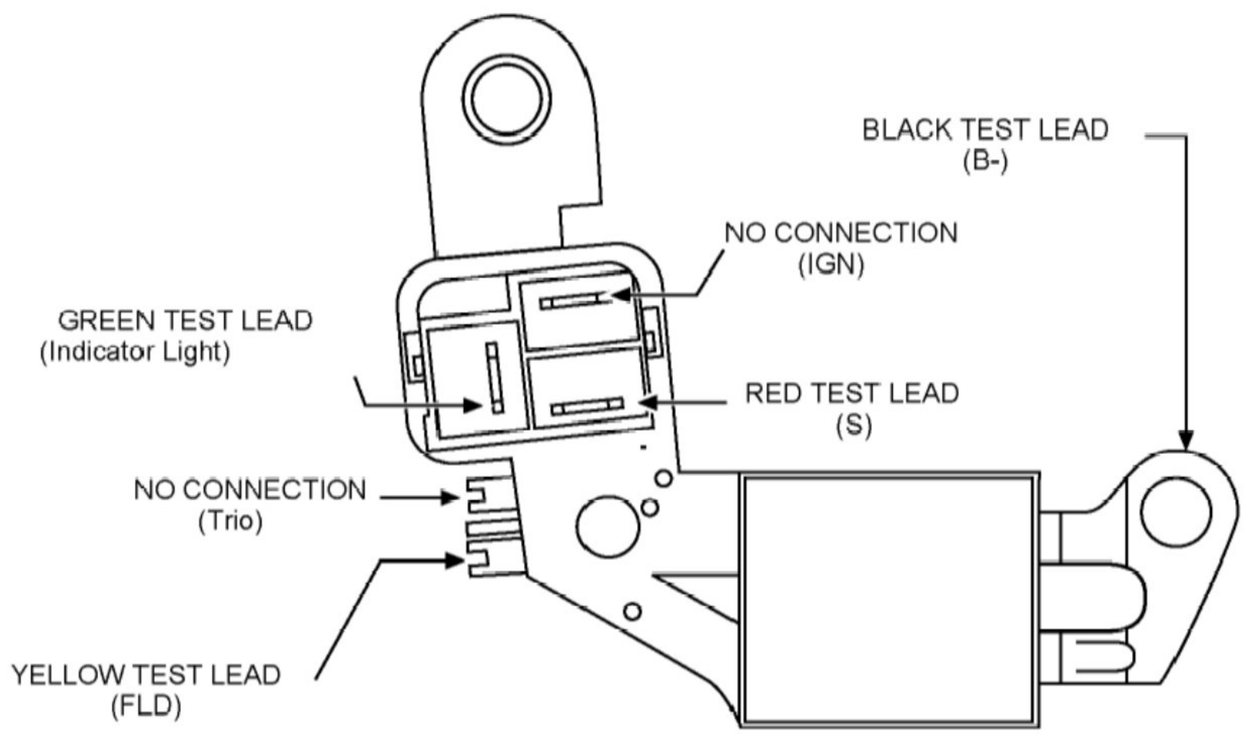

TRANSPO TESTER INSTRUCTIONS

for NIPPONDENSO type regulators

PART NO.	FLD	VOLT	SET POINT	PART NO.	FLD	VOLT	SET POINT
IN218	**A**	**12**	**14.2**				
IN217	**A**	**24**	**27.5**				

1. POWER OFF: Set "Voltage Range" and "FLD" switches to desired setting. Connect the voltage regulator as indicated in the diagram below.

2. POWER ON: Field lamp should blink and meter will indicate approximately the set point voltage indicated in the above table.

3. ADDITIONAL TEST: Remove red test lead from terminal marked "BAT POS.". The meter should indicate approximately 17V on the IN218 regulator and 28V on the IN236 regulator.

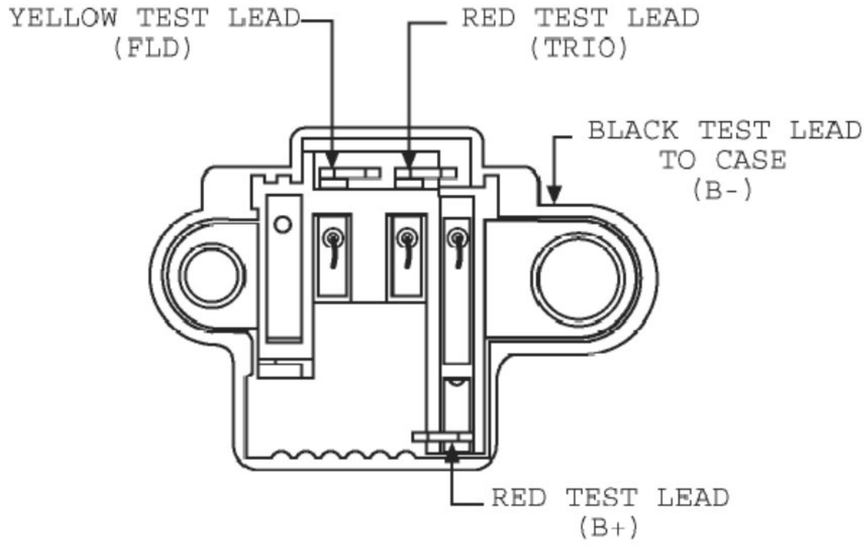

TRANSPO TESTER INSTRUCTIONS

for NIPPONDENSO type regulators

PART NO.	FLD	VOLT	SET POINT	PART NO.	FLD	VOLT	SET POINT
IN235	**A**	**12**	**14.1**				

1. POWER OFF: Set "Voltage Range" and "FLD" switches to desired setting. Connect the voltage regulator as indicated in the diagram below.

2. POWER ON: Field lamp should blink and meter will indicate approximately the set point voltage indicated in the above table.

3. ADDITIONAL TEST:

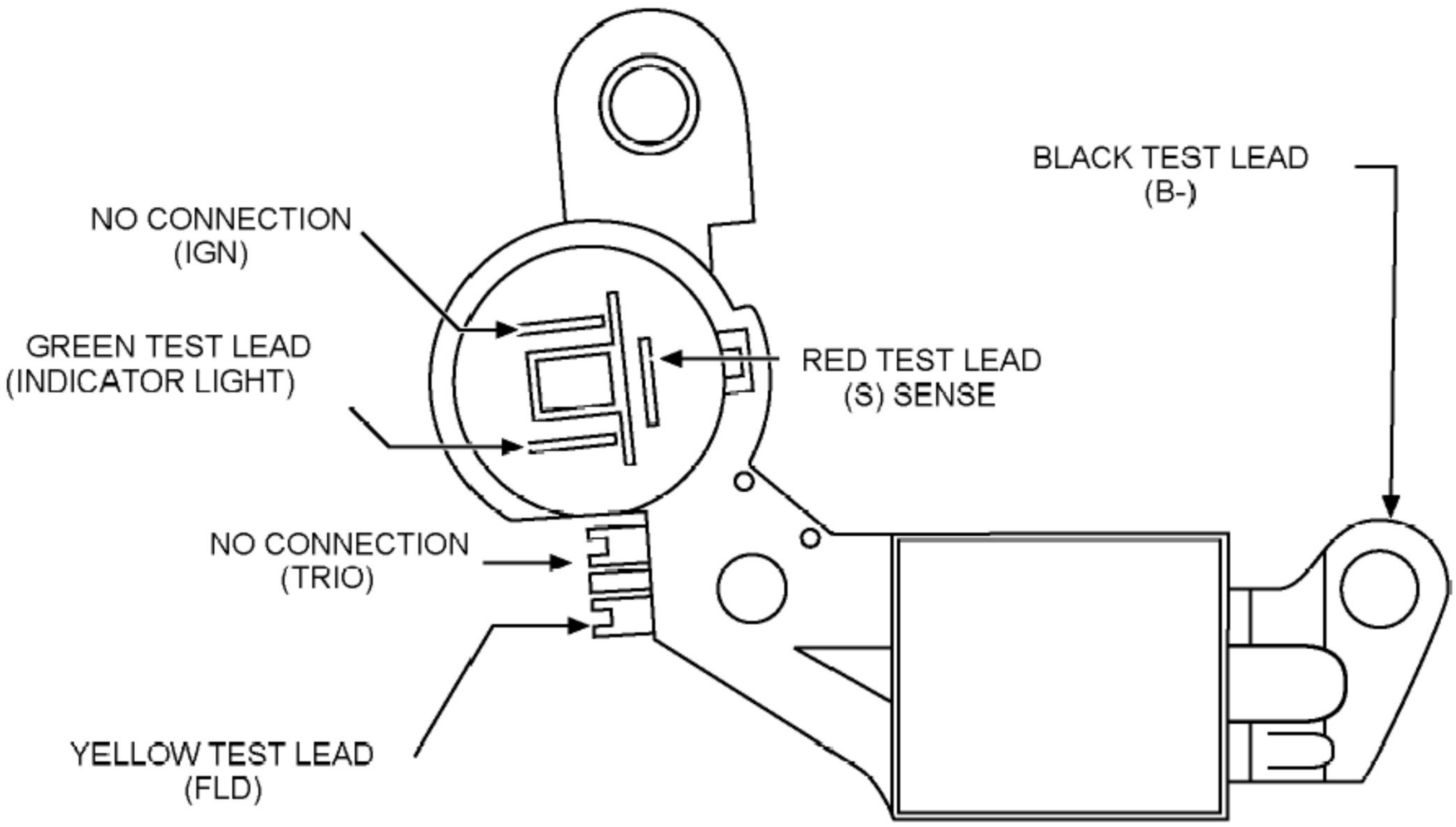

TRANSPO TESTER INSTRUCTIONS

for NIPPONDENSO type regulators

PART NO.	FLD	VOLT	SET POINT	PART NO.	FLD	VOLT	SET POINT
IN231	**A**	**12**	**14.4**				
IN232	**A**	**12**	**14.3**				

1. POWER OFF: Set "Voltage Range" and "FLD" switches to desired setting. Connect the voltage regulator as indicated in the diagram below.

2. POWER ON: Field lamp should blink and meter will indicate approximately the set point voltage indicated in the above table.

3. ADDITIONAL TEST:

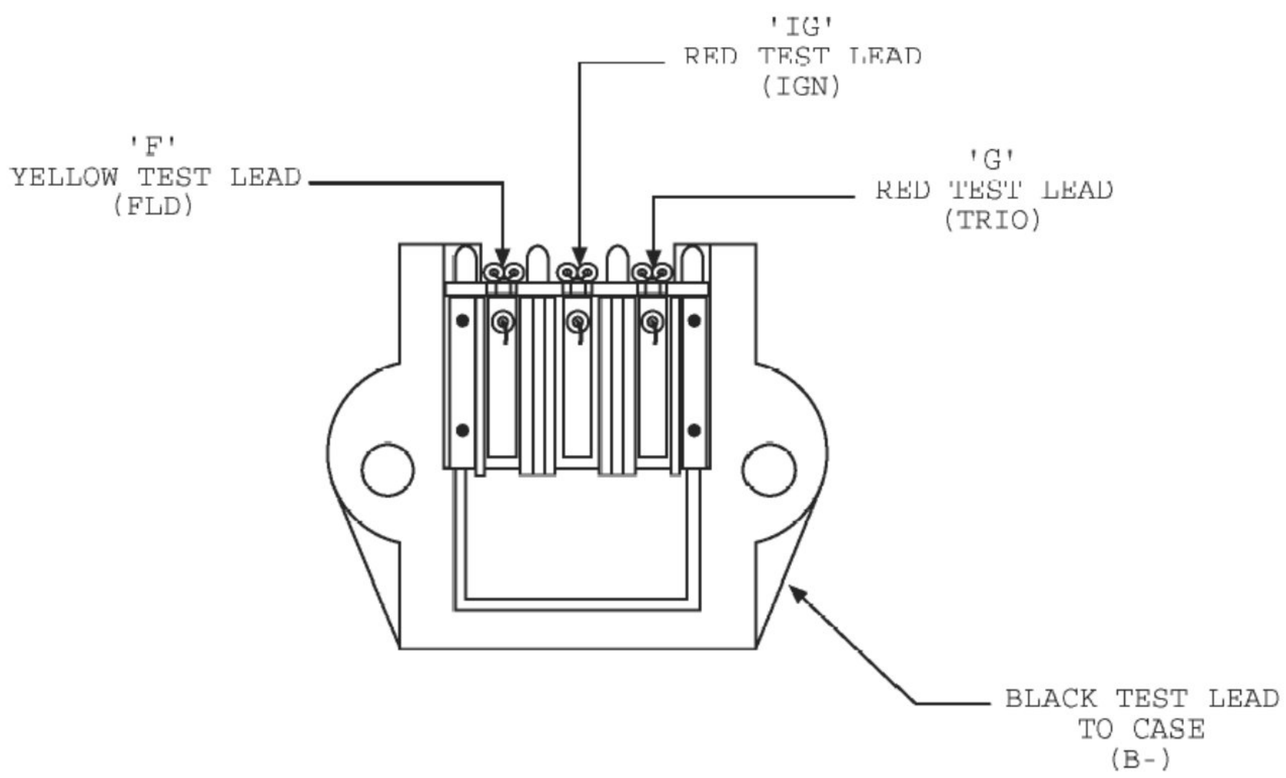

TRANSPO TESTER INSTRUCTIONS

for NIPPONDENSO type regulators

PART NO.	FLD	VOLT	SET POINT	PART NO.	FLD	VOLT	SET POINT
IN223	**A**	**12**	**14.4**				

1. POWER OFF: Set "Voltage Range" and "FLD" switches to desired setting. Connect the voltage regulator as indicated in the diagram below.

2. POWER ON: Field lamp should blink and meter will indicate approximately the set point voltage indicated in the above table.

3. ADDITIONAL TEST: Remove test lead from terminal marked "P" Indicator light should turn on, field lamp will remain on, and the meter will indicate approximately 12.0V.

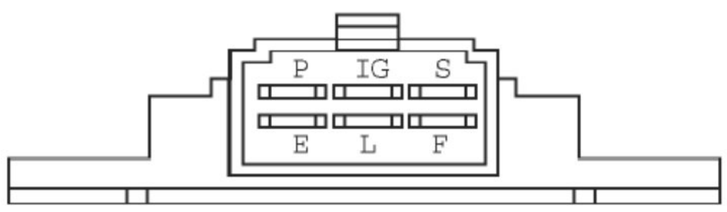

TERMINAL	DESCRIPTION	CONNECTION
P	STATOR	WHITE TEST LEAD (RED FOR O.E.)
IG	IGNITION	RED TEST LEAD
E	GROUND	BLACK TEST LEAD
L	LIGHT	GREEN TEST LEAD
F	FIELD	YELLOW TEST LEAD
S	BATTERY SENSE	RED TEST LEAD

TRANSPO TESTER INSTRUCTIONS

for NIPPONDENSO type regulators

PART NO.	FLD	VOLT	SET POINT	PART NO.	FLD	VOLT	SET POINT
IN550	**A**	**12**	**14.2**				

1. POWER OFF: Set "Voltage Range" and "FLD" switches to desired setting. Connect the voltage regulator as indicated in the diagram below.

2. POWER ON: Field lamp should blink and meter will indicate approximately the set point voltage indicated in the above table.

3. ADDITIONAL TEST:

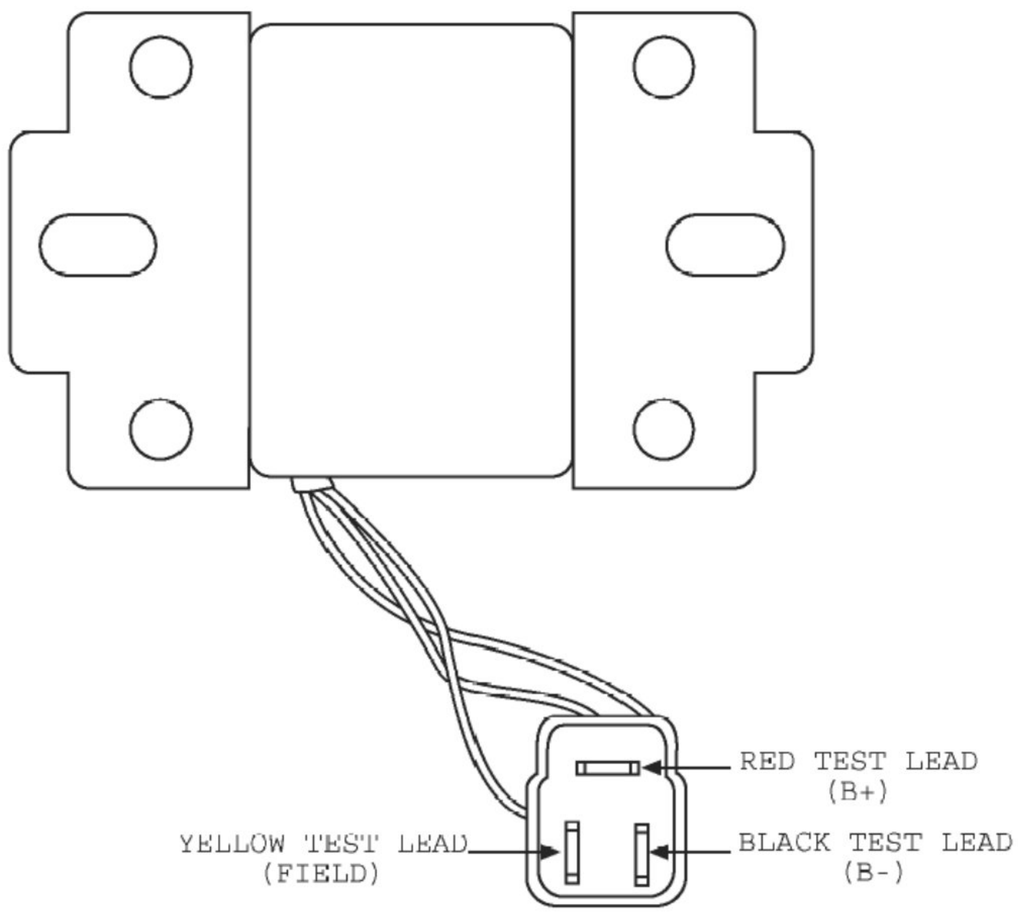

TRANSPO TESTER INSTRUCTIONS

for NIPPONDENSO type regulators

PART NO.	FLD	VOLT	SET POINT	PART NO.	FLD	VOLT	SET POINT
IN551	**B**	**12**	**14.3**	**IN822**	**B**	**12**	**14.3**
IN558	**B**	**12**	**14.3**	**IN579**	**B**	**12**	**14.3**
IN560	**B**	**12**	**14.3**				
IN562	**B**	**12**	**14.3**				

1. POWER OFF: Set "Voltage Range" and "FLD" switches to desired setting. Connect the voltage regulator as indicated in the diagram below.

2. POWER ON: Field lamp should blink and meter will indicate approximately the set point voltage indicated in the above table.

3. ADDITIONAL TEST: Remove black test lead from terminal marked "STA". Indicator light should turn on and the meter will indicate the set point voltage.

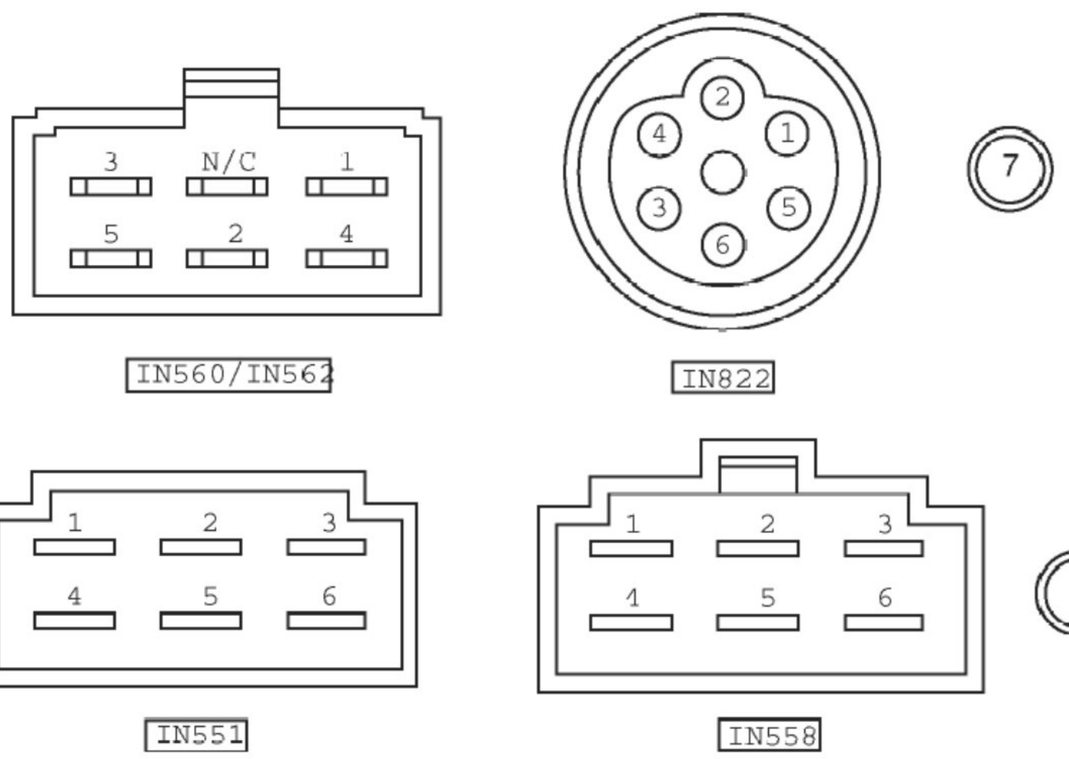

TRANSPO TESTER INSTRUCTIONS

for NIPPONDENSO type regulators

PART NO.	FLD	VOLT	SET POINT	PART NO.	FLD	VOLT	SET POINT
IN569	**B**	**12**	**14.3**				
IN578	**B**	**12**	**14.3**				
IN589	**B**	**12**	**14.3**				

1. POWER OFF: Set "Voltage Range" and "FLD" switches to desired setting. Connect the voltage regulator as indicated in the diagram below.

2. POWER ON: Field lamp should blink and meter will indicate approximately the set point voltage indicated in the above table.

3. ADDITIONAL TEST: Remove black test lead from terminal marked "STA". Indicator light should turn on and the meter will indicate the set point voltage.

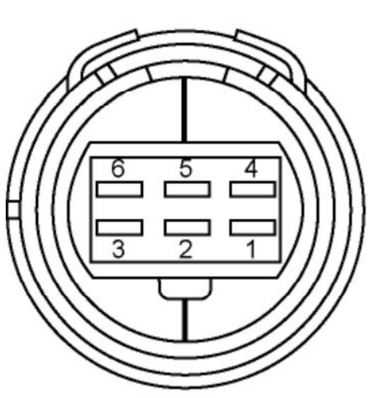

IN569

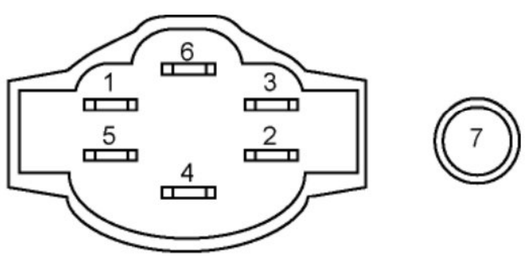

IN589

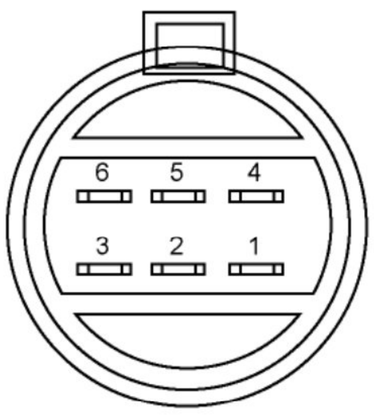

IN578

NOTES:
1- RED TEST LEAD (IGN)
2- BLACK TEST LEAD (STA)
3- YELLOW TEST LEAD (FIELD)
4- BLACK TEST LEAD (B-)
5- GREEN TEST LEAD (I.L.)
6- RED TEST LEAD (B+)
7- NO CONNECTION

TRANSPO TESTER INSTRUCTIONS

for NIPPONDENSO type regulators

PART NO.	FLD	VOLT	SET POINT	PART NO.	FLD	VOLT	SET POINT
IN233	**A**	**24**	**28**				

1. POWER OFF: Set "Voltage Range" and "FLD" switches to desired setting. Connect the voltage regulator as indicated in the diagram below.

2. POWER ON: Field lamp should blink and meter will indicate approximately the set point voltage indicated in the above table.

3. ADDITIONAL TEST:

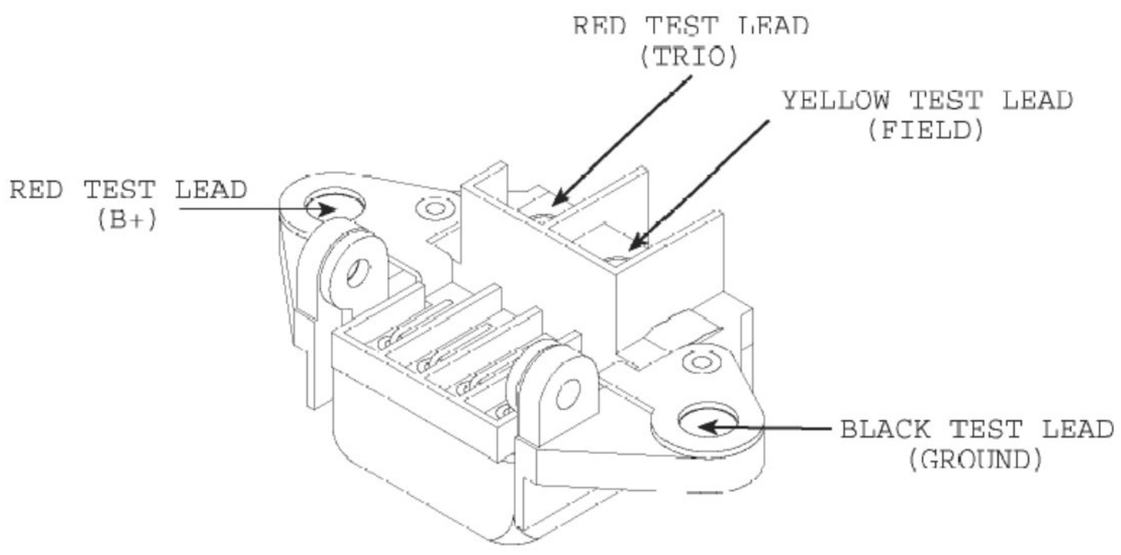

TRANSPO TESTER INSTRUCTIONS

for NIPPONDENSO type regulators

PART NO.	FLD	VOLT	SET POINT	PART NO.	FLD	VOLT	SET POINT
IN441	**A**	**14**	**14.3**				

1. POWER OFF: Set "Voltage Range" and "FLD" switches to desired setting. Connect the voltage regulator as indicated in the diagram below.

2. POWER ON: Field lamp should blink and meter will indicate approximately the set point voltage indicated in the above table.

3. ADDITIONAL TEST: Remove white test lead from terminal marked *. Indicator light will turn on and meter will indicate 12V. Field circuit light stays on. Remove red test lead from terminal marked "IG"; field lamp should turn on.

Using VRC1000: To check for over Voltage, push the "Over Voltage" switch and the "Lamp Indicator" will turn on between 16.0V and 17.1V.

NOTE on Stator: Transpo (White test lead) / OE (Red test lead)

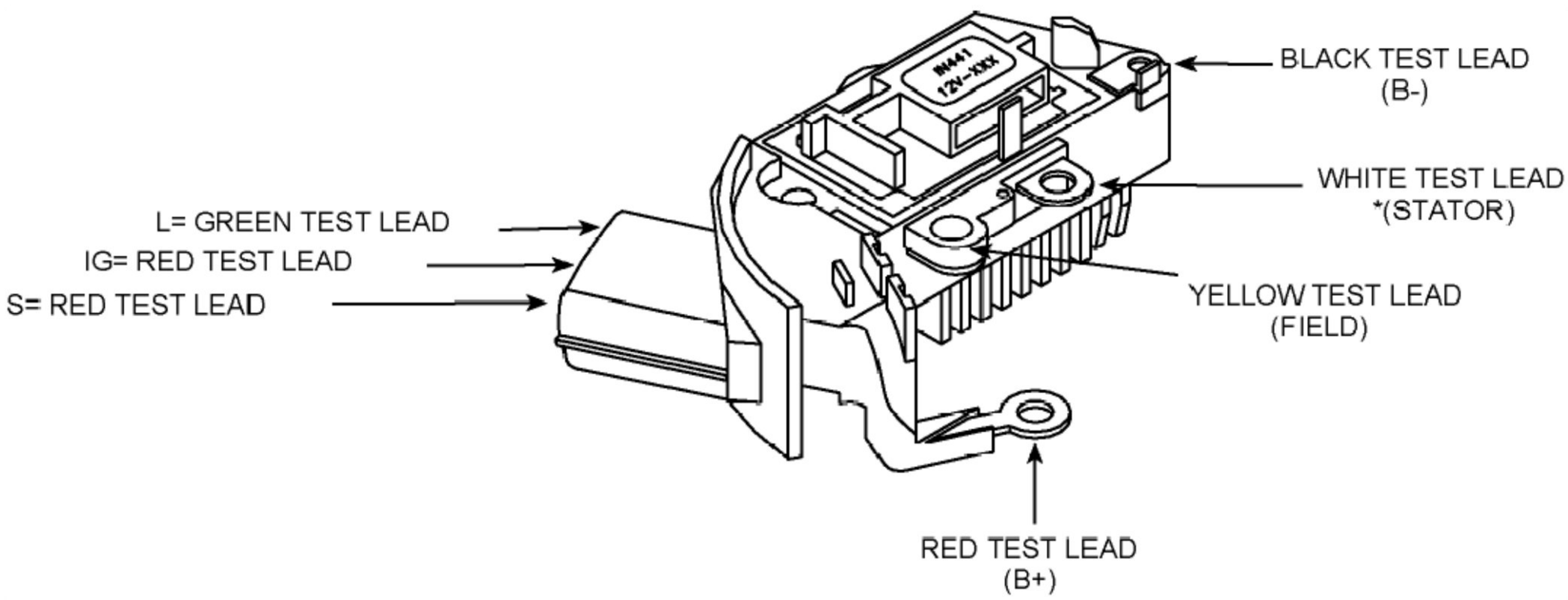

TRANSPO TESTER INSTRUCTIONS

for NIPPONDENSO type regulators

PART NO.	FLD	VOLT	SET POINT	PART NO.	FLD	VOLT	SET POINT
IN442	**A**	**12**	**14.1**				

1. POWER OFF: Set "Voltage Range" and "FLD" switches to desired setting. Connect the voltage regulator as indicated in the diagram below.

2. POWER ON: Field lamp should blink and meter will indicate approximately the set point voltage indicated in the above table.

3. ADDITIONAL TEST: Remove red test lead from terminal marked stator. Indicator light will come on.

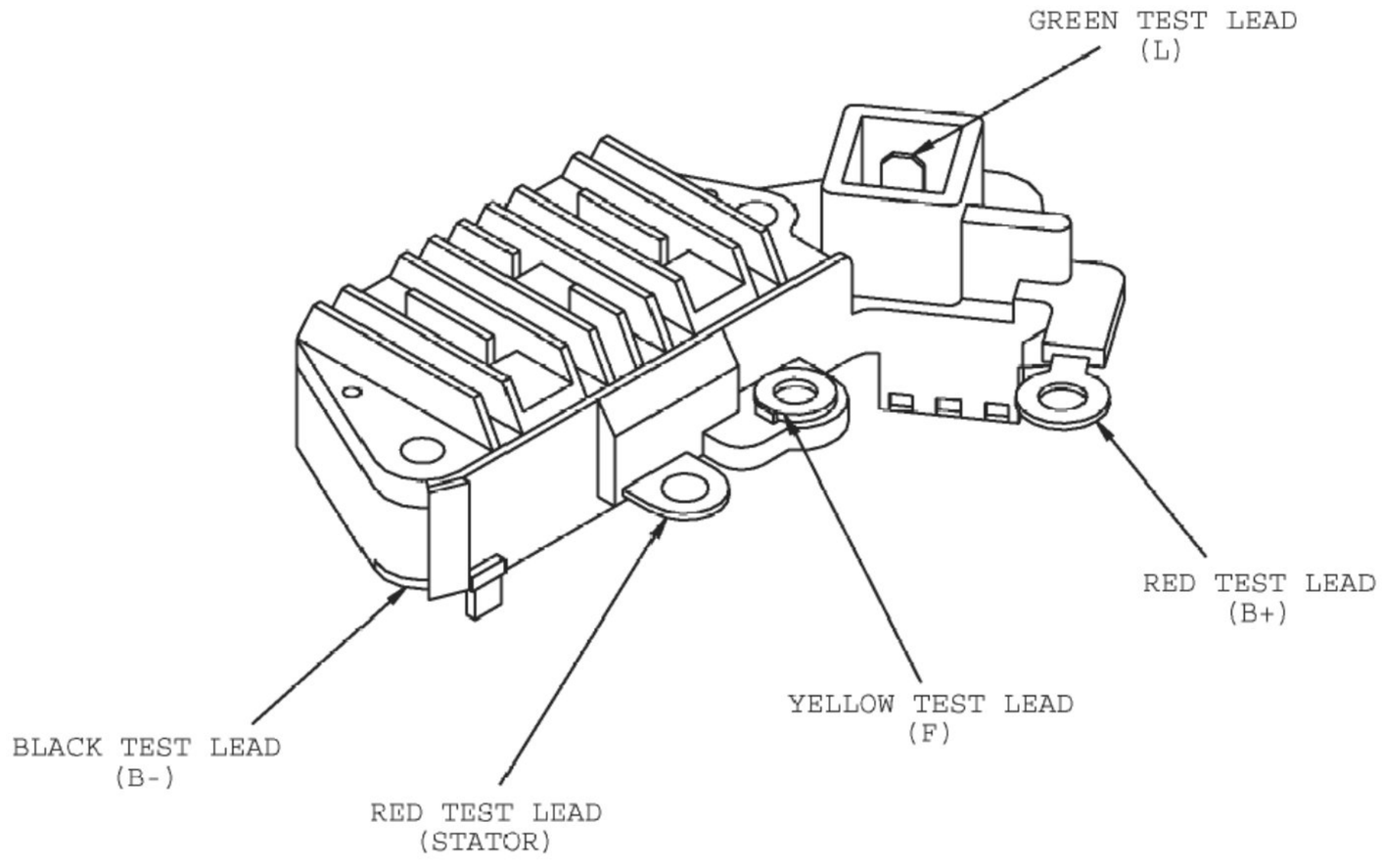

TRANSPO TESTER INSTRUCTIONS

for NIPPONDENSO type regulators

PART NO.	FLD	VOLT	SET POINT	PART NO.	FLD	VOLT	SET POINT
IN600	**B**	**12**	**14.3**				

1. POWER OFF: Set "Voltage Range" and "FLD" switches to desired setting. Connect the voltage regulator as indicated in the diagram below.

2. POWER ON: Field lamp should blink and meter will indicate approximately the set point voltage indicated in the above table.

3. ADDITIONAL TEST: Remove black test lead from terminal marked "STA". Indicator light should turn on and the meter will indicate set point voltage.

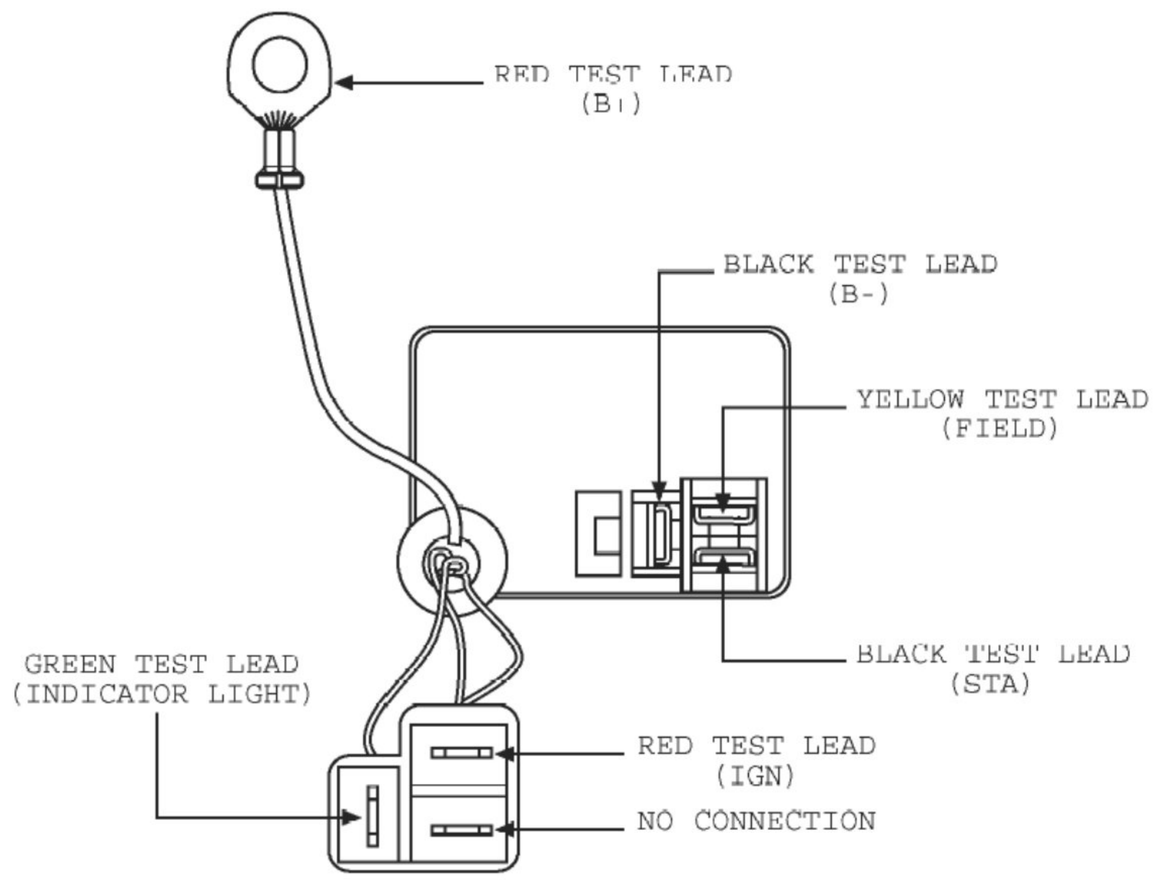

TRANSPO TESTER INSTRUCTIONS

for NIPPONDENSO type regulators

PART NO.	FLD	VOLT	SET POINT	PART NO.	FLD	VOLT	SET POINT
IN601	**B**	**12**	**14.3**				

1. POWER OFF: Set "Voltage Range" and "FLD" switches to desired setting. Connect the voltage regulator as indicated in the diagram below.

2. POWER ON: Field lamp should blink and meter will indicate approximately the set point voltage indicated in the above table.

3. ADDITIONAL TEST:

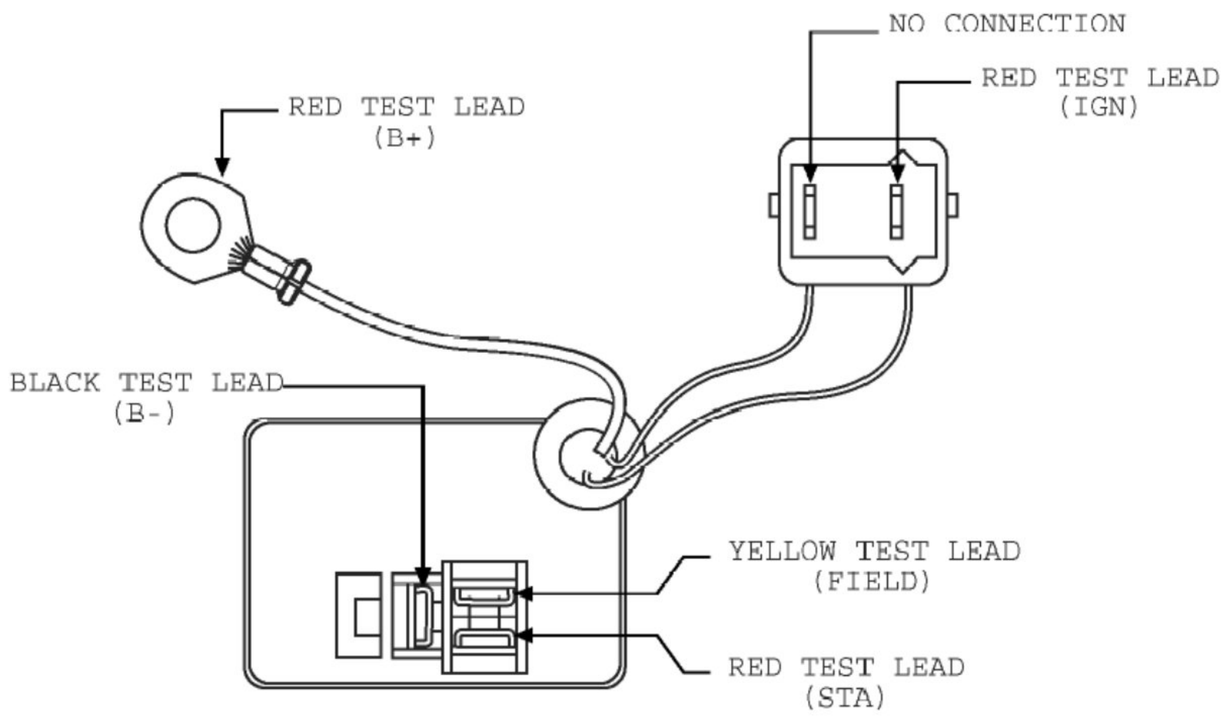

TRANSPO TESTER INSTRUCTIONS

for NIPPONDENSO type regulators

PART NO.	FLD	VOLT	SET POINT	PART NO.	FLD	VOLT	SET POINT
IN602	**B**	**12**	**14.3**				

1. POWER OFF: Set "Voltage Range" and "FLD" switches to desired setting. Connect the voltage regulator as indicated in the diagram below.

2. POWER ON: Field lamp should blink and meter will indicate approximately the set point voltage indicated in the above table.

3. ADDITIONAL TEST: Remove black test lead from terminal marked "STA". Indicator light turn on and the meter will indicator light should turn on and the meter will indicate the set point voltage.

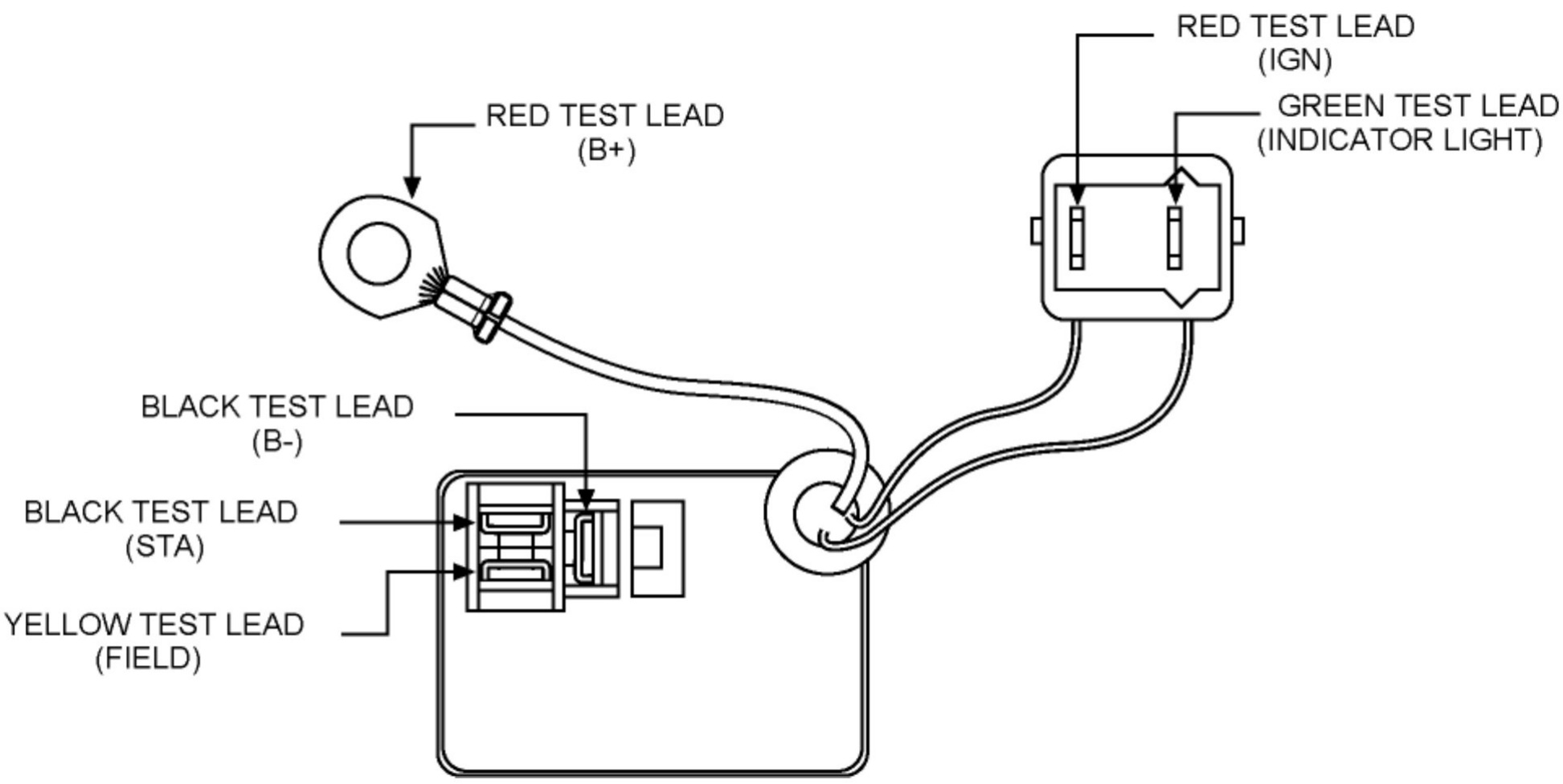

TRANSPO TESTER INSTRUCTIONS

for NIPPONDENSO type regulators

PART NO.	FLD	VOLT	SET POINT	PART NO.	FLD	VOLT	SET POINT
IN219	**A**	**12**	**14.5**	**IN225**	**A**	**12**	**14.5**
IN221	**A**	**12**	**14.5**	**IN227**	**A**	**12**	**14.5**
IN222	**A**	**12**	**14.5**	**IN251**	**A**	**12**	**14.5**
IN224	**A**	**12**	**14.5**	**IN252**	**A**	**12**	**14.5**

1. POWER OFF: Set "Voltage Range" and "FLD" switches to desired setting. Connect the voltage regulator as indicated in the diagram below.

2. POWER ON: Field lamp should blink and meter will indicate approximately the set point voltage indicated in the above table.

3. ADDITIONAL TEST: **<u>Using VRC1000</u>**: To check for over Voltage, push the "Over Voltage" switch and the "Lamp Indicator" will turn on between 16.0V and 17.1V.
See Below:

3.1 **<u>Remove test lead from terminal marked "STATOR".</u>**
- On the Original Equipment "C" and "D" model regulators, voltage should rise above 16 volts and the indicator light will turn on.
- On Transpo "D" model regulators, Indicator light should turn on and the meter will still indicate set point voltage.
- On "C" model regulators no change will occur

3.2 **<u>On IN222, IN224, IN252 and IN431 (C model) regulators.</u>**
Remove red test lead from the terminal marked "C". Field lamp should still blink and the meter will indicate set point voltage. Connect black test lead to terminal marked "C". Field lamp should still blink and the meter will indicate 12.3V.

3.3 **<u>On all above parts except Transpo "C" models.</u>**
Remove red test lead from terminal marked "IG:. Field lamp should turn off and the meter will indicate low voltage.

<u>NOTE ON STATOR CONNECTION:</u>

Transpo "D" model regulators (Black test lead)
- IN219, IN221, IN225, IN251, IN253, IN429
Transpo "C" model regulators (White test lead)
-IN222, IN224, IN252, IN431
O.E.M. (Red test lead)

REFER TO PRODUCT GROUP IN-19, PAGE 332-A, FOR REGULATOR'S DIAGRAM

TRANSPO TESTER INSTRUCTIONS

for NIPPONDENSO type regulators

PART NO.	FLD	VOLT	SET POINT	PART NO.	FLD	VOLT	SET POINT
IN253	**A**	**12**	**14.5**	**IN431**	**A**	**12**	**14.5**
IN254	**A**	**12**	**14.5**	**IN435**	**A**	**12**	**14.5**
IN255	**A**	**12**	**14.5**				
IN429	**A**	**12**	**14.5**				

1. POWER OFF: Set "Voltage Range" and "FLD" switches to desired setting. Connect the voltage regulator as indicated in the diagram below.

2. POWER ON: Field lamp should blink and meter will indicate approximately the set point voltage indicated in the above table.

3. ADDITIONAL TEST: **<u>Using VRC1000</u>**: To check for over Voltage, push the "Over Voltage" switch and the "Lamp Indicator" will turn on between 16.0V and 17.1V.

3.1 **<u>Remove test lead from terminal marked "STATOR".</u>**
- On the Original Equipment "C" and "D" model regulators, voltage should rise above 16 volts and the indicator light will turn on.
- On Transpo "D" model regulators, Indicator light should turn on and the meter will still indicate set point voltage.
- On "C" model regulators no change will occur

3.2 **<u>On IN222, IN224, IN252 and IN431 (C model) regulators.</u>**
Remove red test lead from the terminal marked "C". Field lamp should still blink and the meter will indicate set point voltage. Connect black test lead to terminal marked "C". Field lamp should still blink and the meter will indicate 12.3V.

3.3 **<u>On all above parts except Transpo "C" models.</u>**
Remove red test lead from terminal marked "IG:. Field lamp should turn off and the meter will indicate low voltage.

<u>NOTE ON STATOR CONNECTION:</u>

Transpo "D" model regulators (Black test lead)
- IN219, IN221, IN225, IN251, IN253, IN429
Transpo "C" model regulators (White test lead)
-IN222, IN224, IN252, IN431
O.E.M. (Red test lead)

REFER TO PRODUCT GROUP IN-19, PAGE 332-A FOR REGULATOR'S DIAGRAM

TRANSPO TESTER INSTRUCTIONS

for NIPPONDENSO type regulators

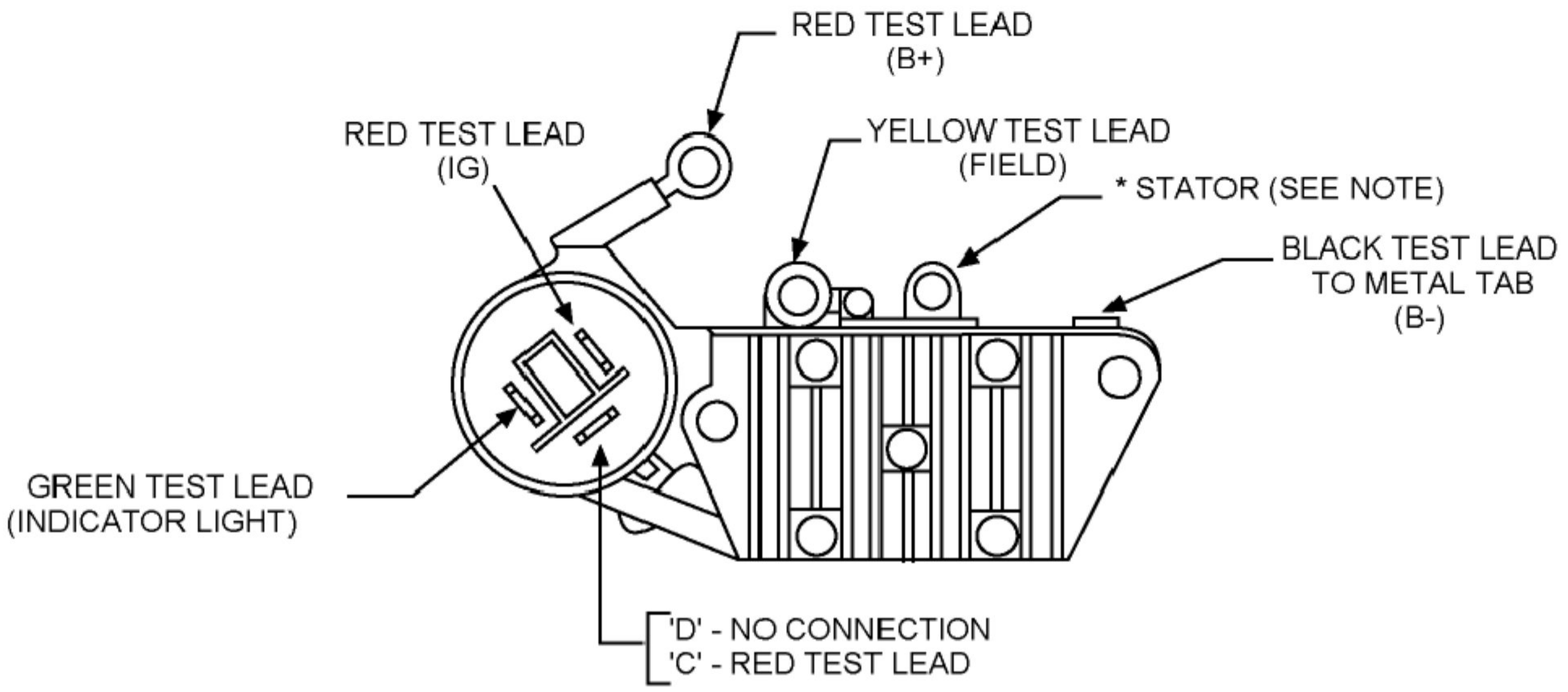

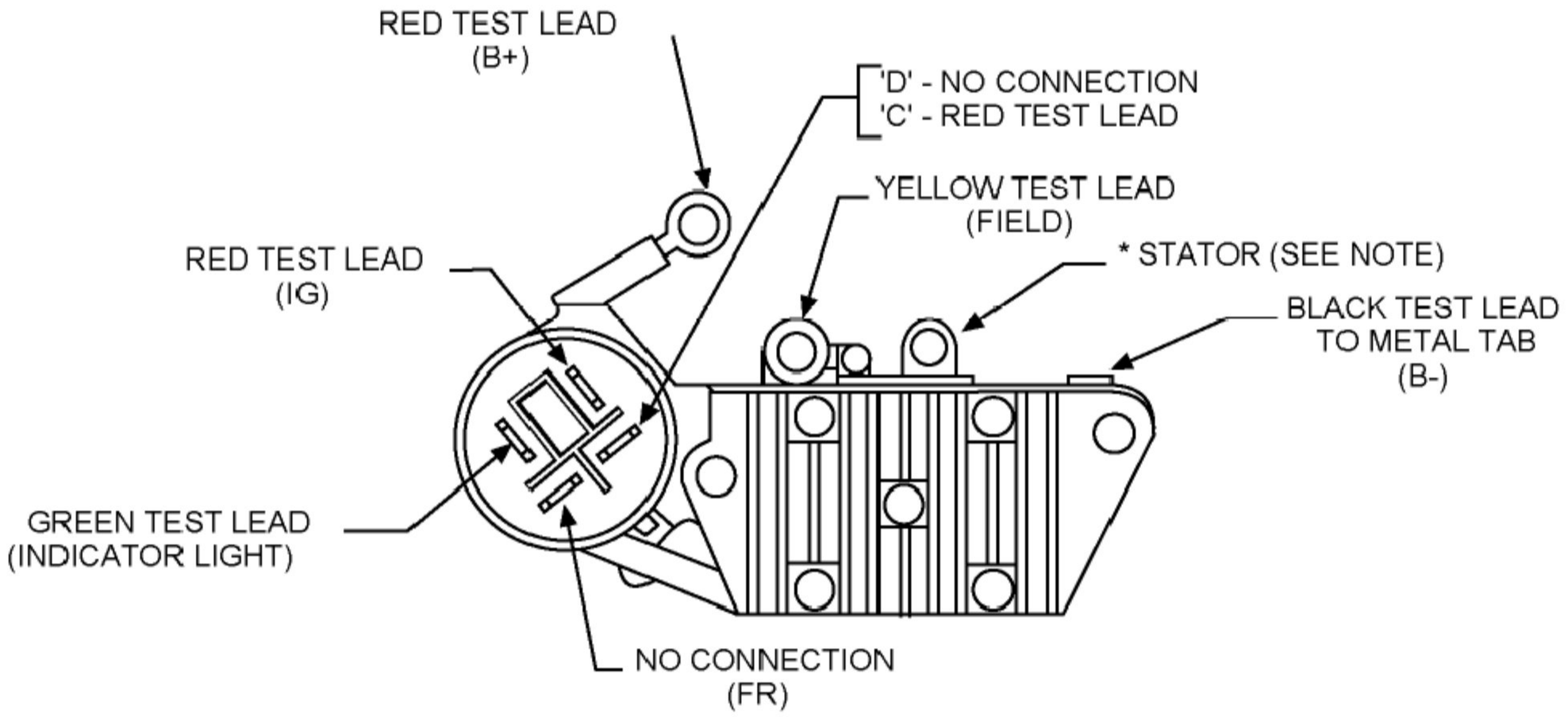

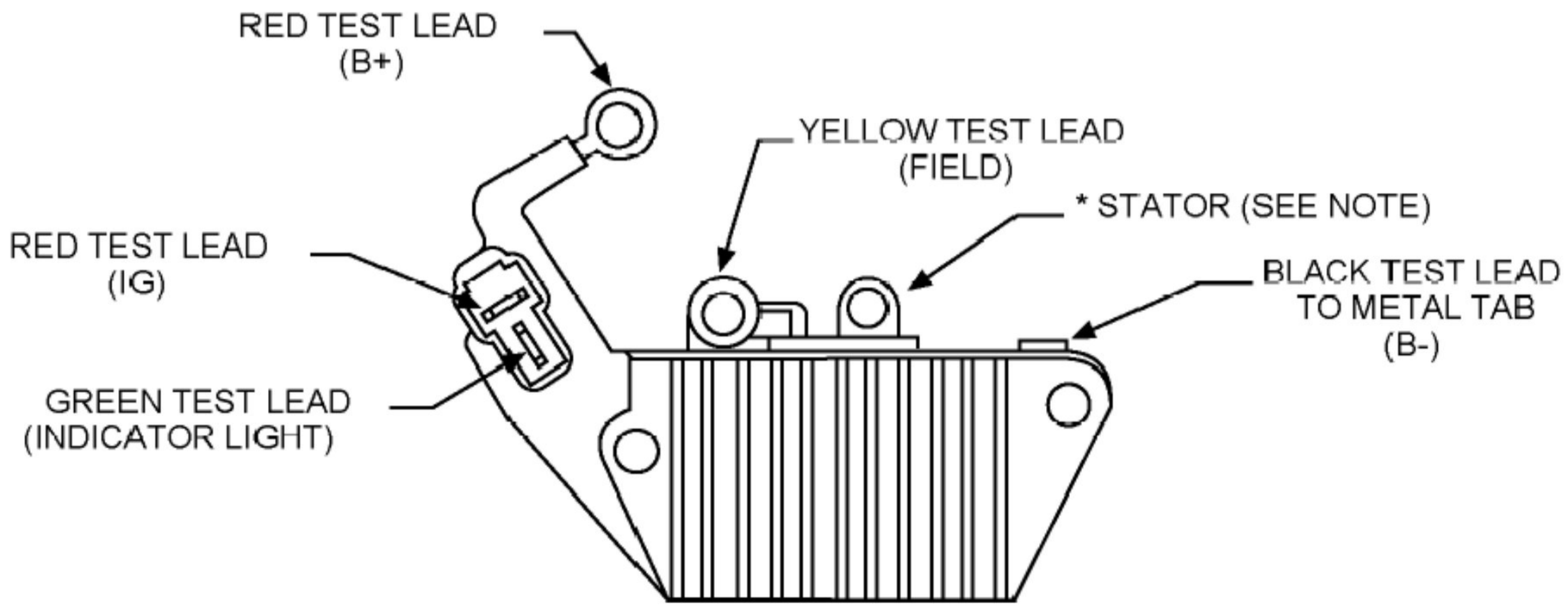

Product Group IN-19 Revision: 4/26/05 Date : 10/2/2006

TRANSPO TESTER INSTRUCTIONS

for NIPPONDENSO type regulators

PART NO.	FLD	VOLT	SET POINT	PART NO.	FLD	VOLT	SET POINT
IN567	**A**	**12**	**14.3**				

1. POWER OFF: Set "Voltage Range" and "FLD" switches to desired setting. Connect the voltage regulator as indicated in the diagram below.

2. POWER ON: Field lamp should blink and meter will indicate approximately the set point voltage indicated in the above table.

3. ADDITIONAL TEST:

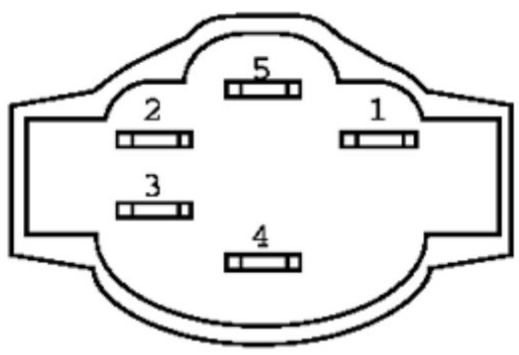

IN567

NOTES:
1 - YELLOW TEST LEAD (FIELD)
2 - RED TEST LEAD (IGN)
3 - RED TEST LEAD (I.L.)
4 - BLACK TEST LEAD (B-)
5 - RED TEST LEAD (B+)

TRANSPO TESTER INSTRUCTIONS

for NIPPONDENSO type regulators

PART NO.	FLD	VOLT	SET POINT	PART NO.	FLD	VOLT	SET POINT
IN8315	**A**	**12**	**14.2**				

1. POWER OFF: Set "Voltage Range" and "FLD" switches to desired setting. Connect the voltage regulator as indicated in the diagram below.

2. POWER ON: Field lamp should blink and meter will indicate approximately the set point voltage indicated in the above table.

3. ADDITIONAL TEST:

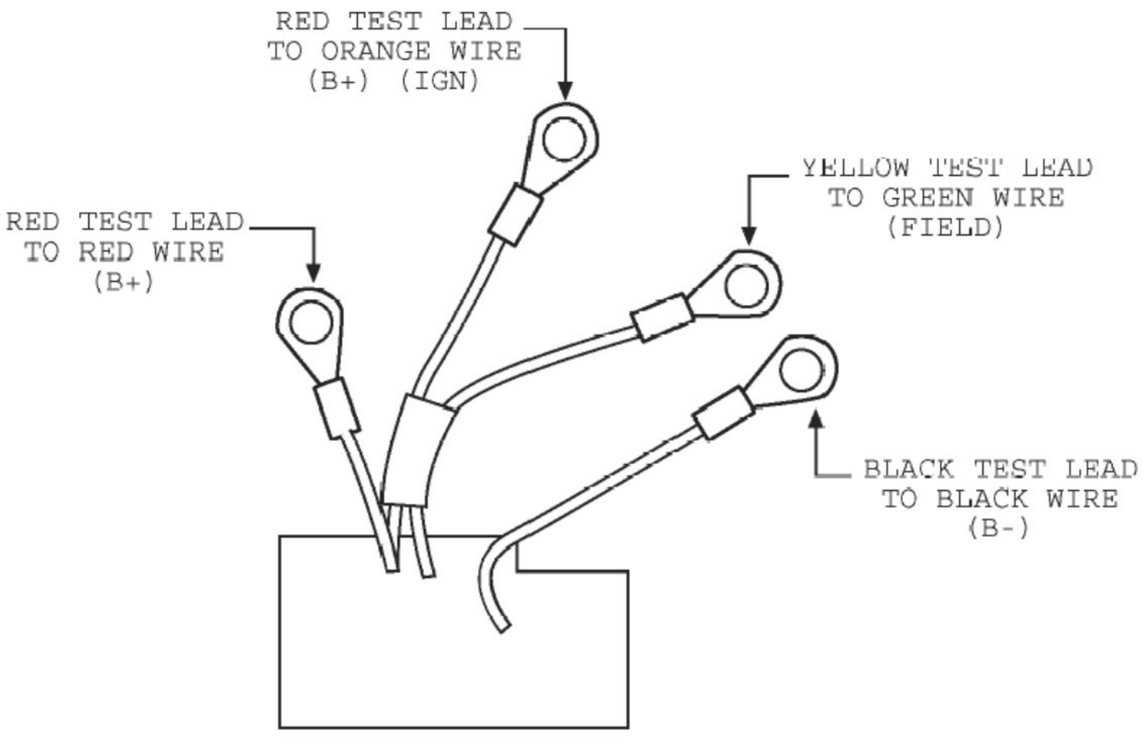

TRANSPO TESTER INSTRUCTIONS

for NIPPONDENSO type regulators

PART NO.	FLD	VOLT	SET POINT	PART NO.	FLD	VOLT	SET POINT
IN554	**B**	**12**	**14.3**				

1. POWER OFF: Set "Voltage Range" and "FLD" switches to desired setting. Connect the voltage regulator as indicated in the diagram below.

2. POWER ON: Field lamp should blink and meter will indicate approximately the set point voltage indicated in the above table.

3. ADDITIONAL TEST:

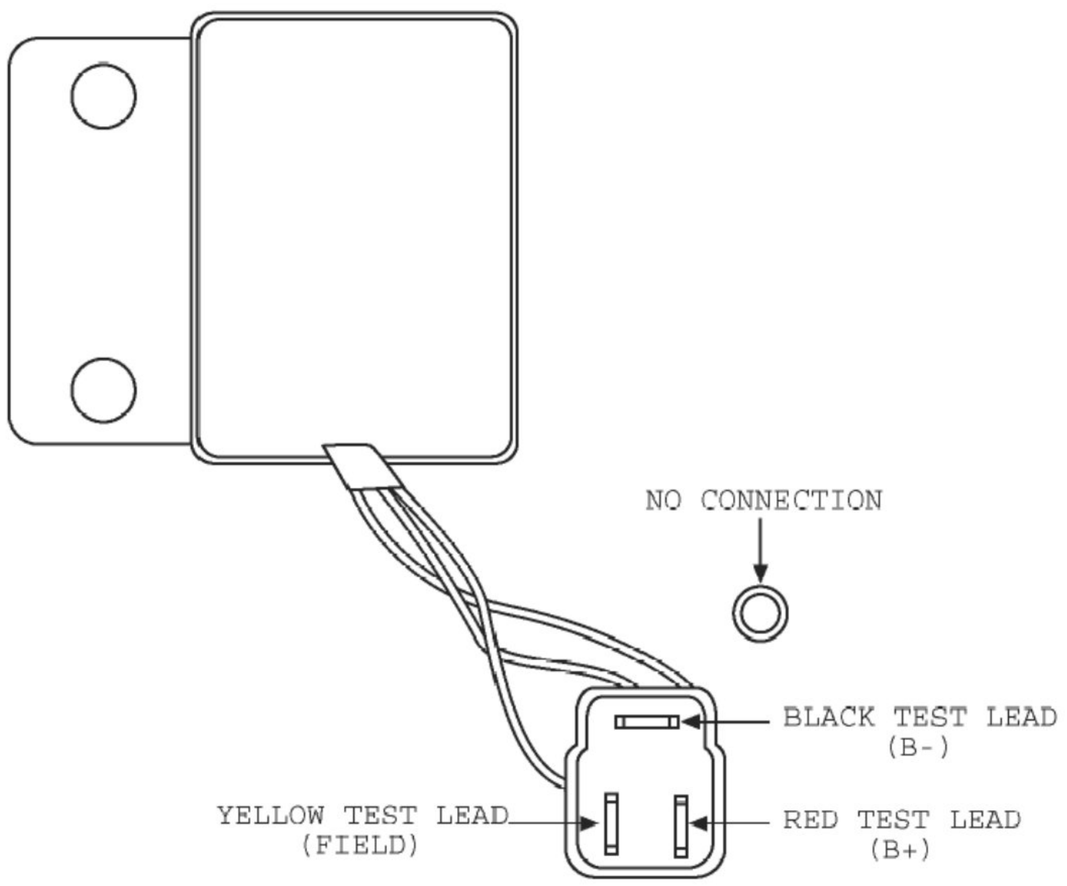

TRANSPO TESTER INSTRUCTIONS

for NIPPONDENSO type regulators

PART NO.	FLD	VOLT	SET POINT	PART NO.	FLD	VOLT	SET POINT
IN228	**A**	**12**	**14.3**				

1. POWER OFF: Set "Voltage Range" and "FLD" switches to desired setting. Connect the voltage regulator as indicated in the diagram below.

2. POWER ON: Field lamp should blink and meter will indicate approximately the set point voltage indicated in the above table.

3. ADDITIONAL TEST:

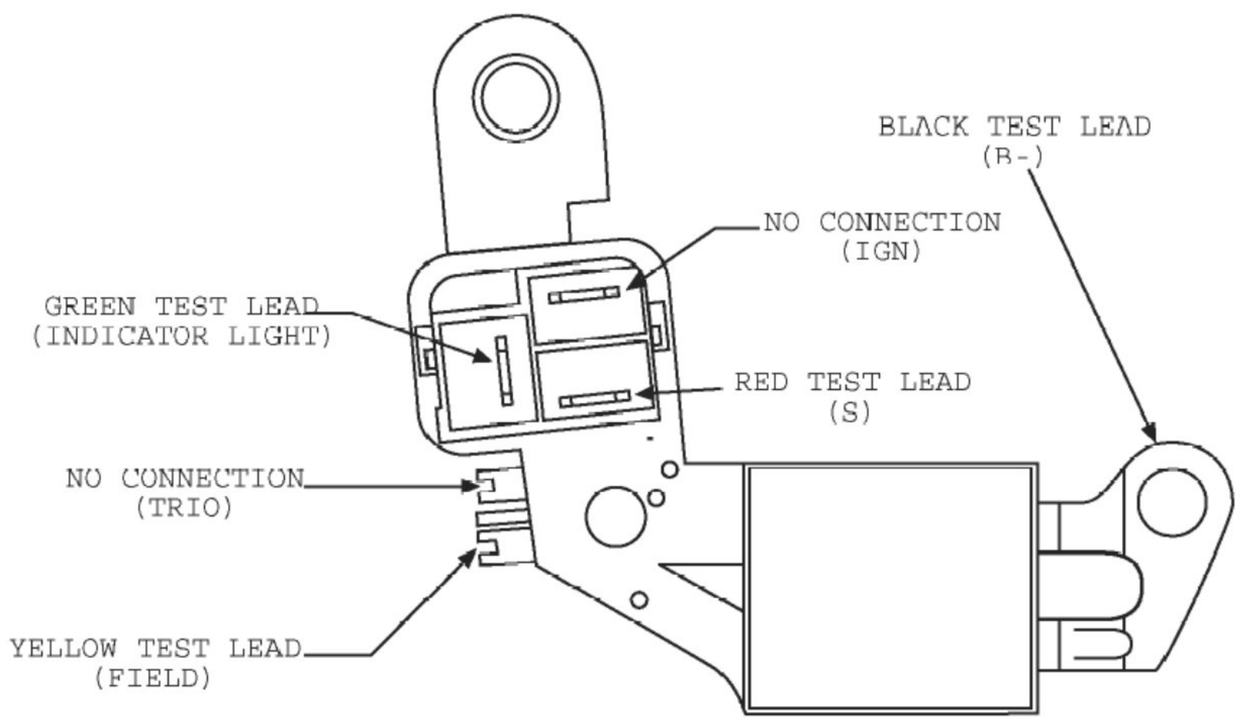

TRANSPO TESTER INSTRUCTIONS

for NIPPONDENSO type regulators

PART NO.	FLD	VOLT	SET POINT	PART NO.	FLD	VOLT	SET POINT
IN230	**A**	**12**	**14.1**				

1. POWER OFF: Set "Voltage Range" and "FLD" switches to desired setting. Connect the voltage regulator as indicated in the diagram below.

2. POWER ON: Field lamp should blink and meter will indicate approximately the set point voltage indicated in the above table.

3. ADDITIONAL TEST: Remove red test lead from terminal marked "S". Indicator light will come on and voltage will rise to approximately 16 volts.

NOTE: When testing the Transpo IN230 or the Original Equipment voltage regulators, the short circuit light may flash and the meter will indicate the set point voltage.

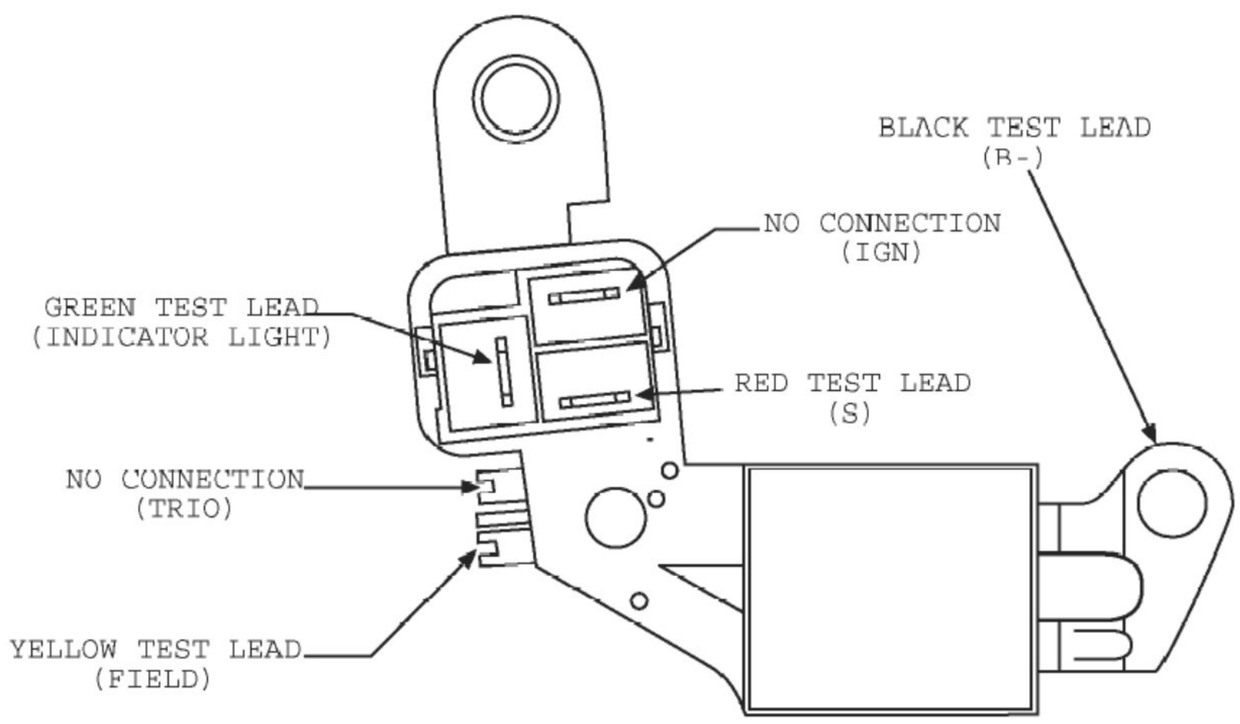

TRANSPO TESTER INSTRUCTIONS

for NIPPONDENSO type regulators

PART NO.	FLD	VOLT	SET POINT	PART NO.	FLD	VOLT	SET POINT
IN568	**B**	**12**	**14.3**				

1. POWER OFF: Set "Voltage Range" and "FLD" switches to desired setting. Connect the voltage regulator as indicated in the diagram below.

2. POWER ON: Field lamp should blink and meter will indicate approximately the set point voltage indicated in the above table.

3. ADDITIONAL TEST:

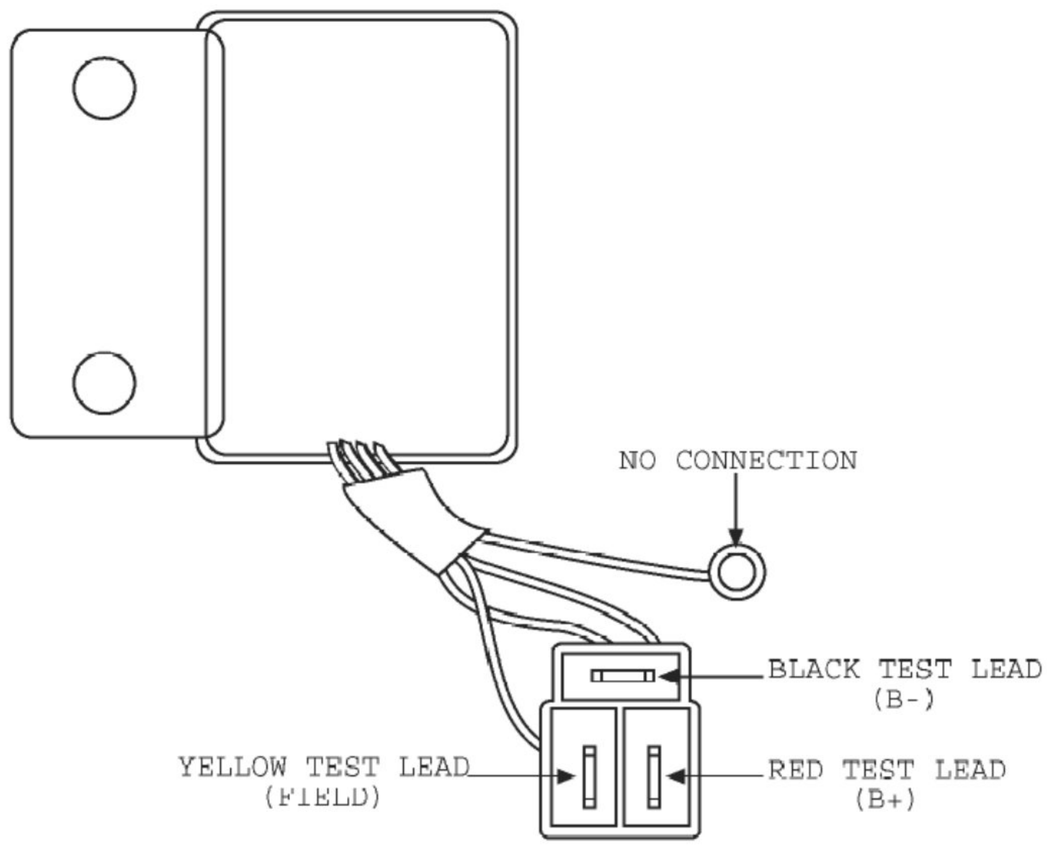

TRANSPO TESTER INSTRUCTIONS

for NIPPONDENSO type regulators

PART NO.	FLD	VOLT	SET POINT	PART NO.	FLD	VOLT	SET POINT
IN821	**B**	**12**	**14.3**				

1. POWER OFF: Set "Voltage Range" and "FLD" switches to desired setting. Connect the voltage regulator as indicated in the diagram below.

2. POWER ON: Field lamp should blink and meter will indicate approximately the set point voltage indicated in the above table.

3. ADDITIONAL TEST: Remove black test lead from the terminal marked "STA". The indicator light should turn on and the meter will indicate the set point voltage.

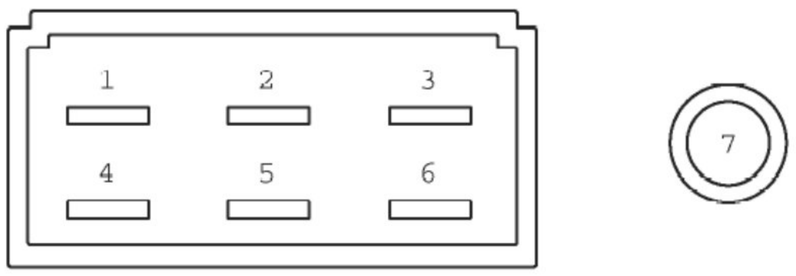

NOTES:
1 - BLACK TEST LEAD (STA)
2 - RED TEST LEAD (IGN)
3 - GREEN TEST LEAD (I.L.)
4 - BLACK TEST LEAD (B-)
5 - YELLOW TEST LEAD (FLD)
6 - RED TEST LEAD (B+)
7 NO CONNECTION

TRANSPO TESTER INSTRUCTIONS

for NIPPONDENSO type regulators

PART NO.	FLD	VOLT	SET POINT	PART NO.	FLD	VOLT	SET POINT
IN220	**A**	**12**	**14.4**	**IN436**	**A**	**12**	**14.0**
IN226	**A**	**12**	**14.4**	**IN437**	**A**	**12**	**14.4**
IN250	**A**	**12**	**14.4**	**IN439**	**A**	**12**	**14.4**
IN256	**A**	**12**	**14.4**	**IN444**	**A**	**12**	**14.4**

1. POWER OFF: Set "Voltage Range" and "FLD" switches to desired setting. Connect the voltage regulator as indicated in the diagram below.

2. POWER ON: Field lamp should blink and meter will indicate approximately the set point voltage indicated in the above table.

3. ADDITIONAL TEST: Remove test lead from the terminal marked "*". The indicator light will turn on and the meter will indicate approximately 12V and the field lamp will remain fully on (this is the soft start mode of the regulator).

Using VRC1000: To check for over Voltage, push the "Over Voltage" switch and the "Lamp Indicator" will turn on between 16.0V and 17.1V. Push the choke drive and the "Choke Drive Indicator Lamp" will turn on, if present.

NOTE on Stator: Transpo (White test lead) / OE (Red test lead)

REFER TO PRODUCT GROUP IN-29, PAGE 341-A FOR REGULATOR'S DIAGRAM

TRANSPO TESTER INSTRUCTIONS

for NIPPONDENSO type regulators

PART NO.	FLD	VOLT	SET POINT	PART NO.	FLD	VOLT	SET POINT
IN774	**A**	**12**	**14.4**				
IN434	**A**	**12**	**14.3**				
IN438	**A**	**12**	**14.3**				

1. POWER OFF: Set "Voltage Range" and "FLD" switches to desired setting. Connect the voltage regulator as indicated in the diagram below.

2. POWER ON: Field lamp should blink and meter will indicate approximately the set point voltage indicated in the above table.

3. ADDITIONAL TEST: Remove test lead from the terminal marked "*". The indicator light will turn on and the meter will indicate approximately 12V and the field lamp will remain fully on (this is the soft start mode of the regulator).
Using VRC1000: To check for over Voltage, push the "Over Voltage" switch and the "Lamp Indicator" will turn on between 16.0V and 17.1V.

NOTE on Stator: Transpo (White test lead) / OE (Red test lead)

REFER TO PRODUCT GROUP IN-29, PAGE 341-A FOR REGULATOR'S DIAGRAM

TRANSPO TESTER INSTRUCTIONS

for NIPPONDENSO type regulators

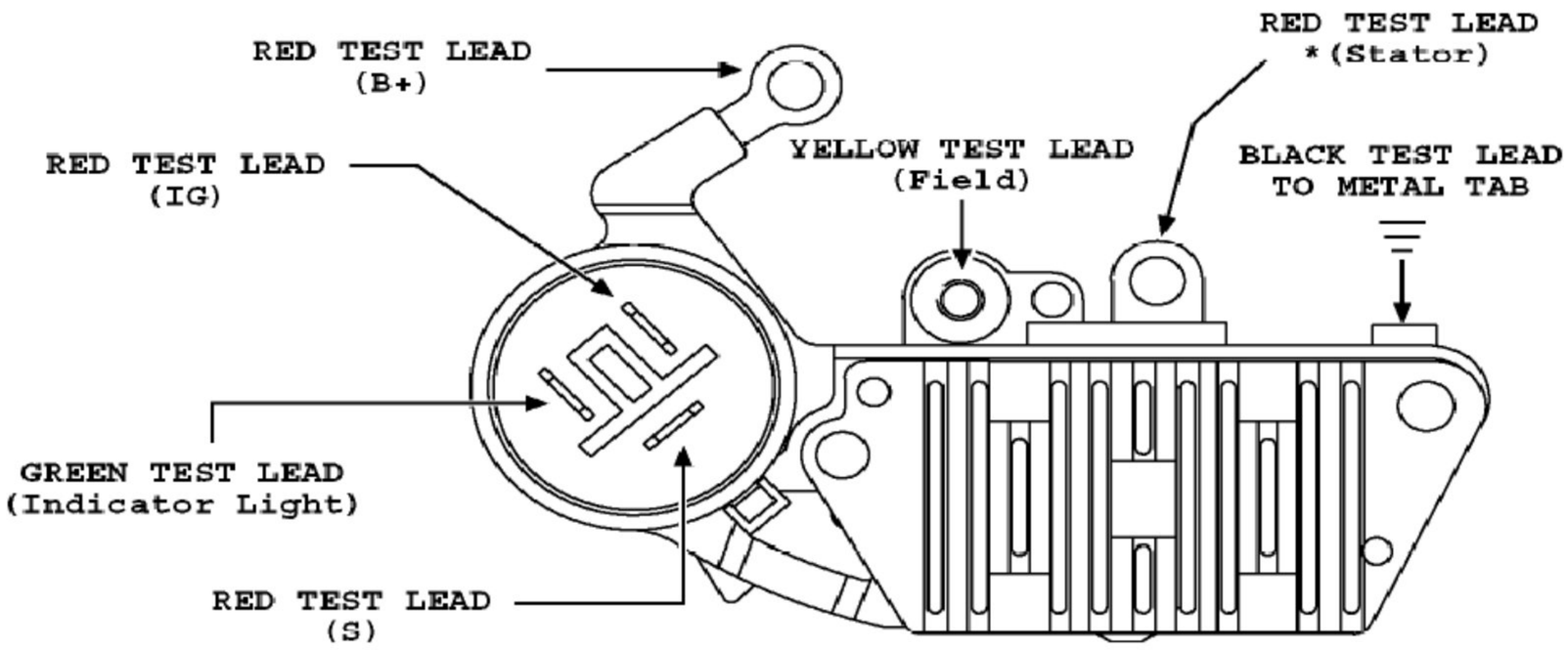

IN220 / IN250

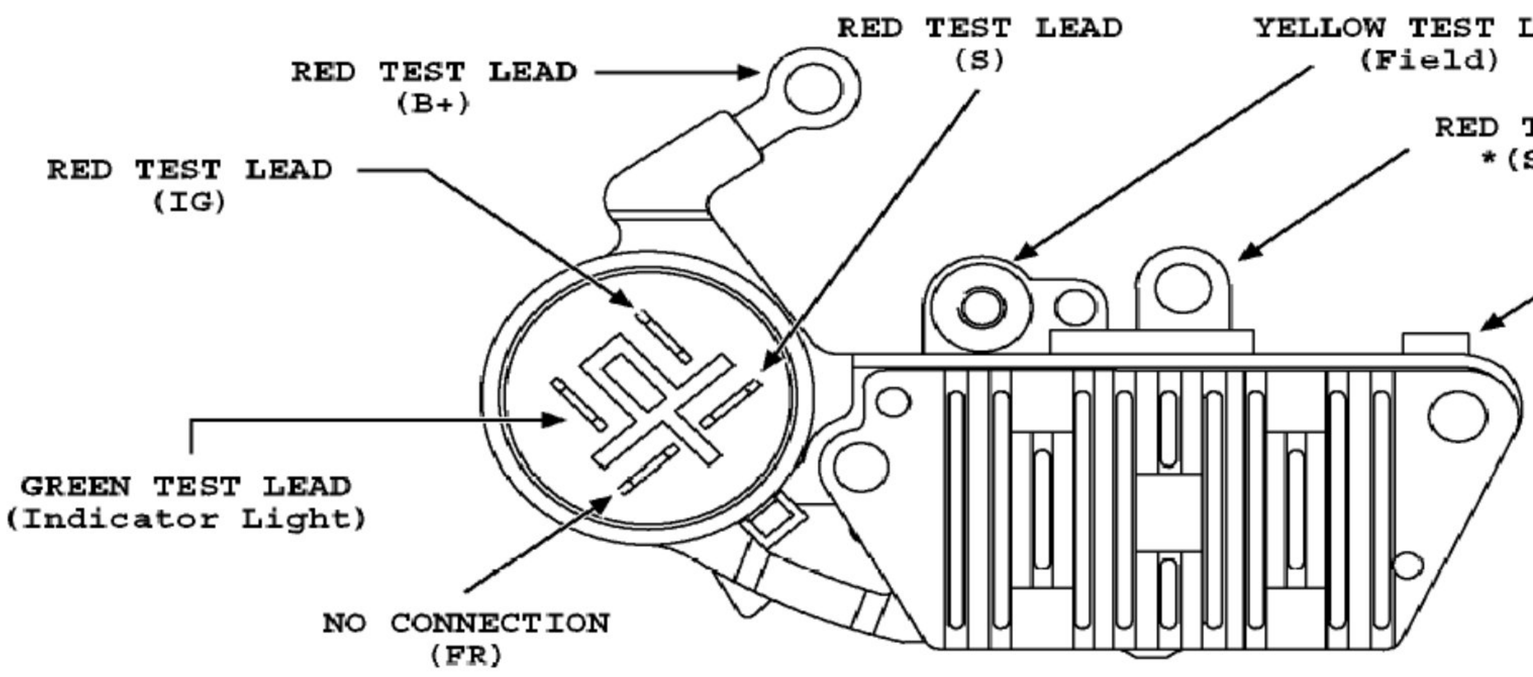

TN226

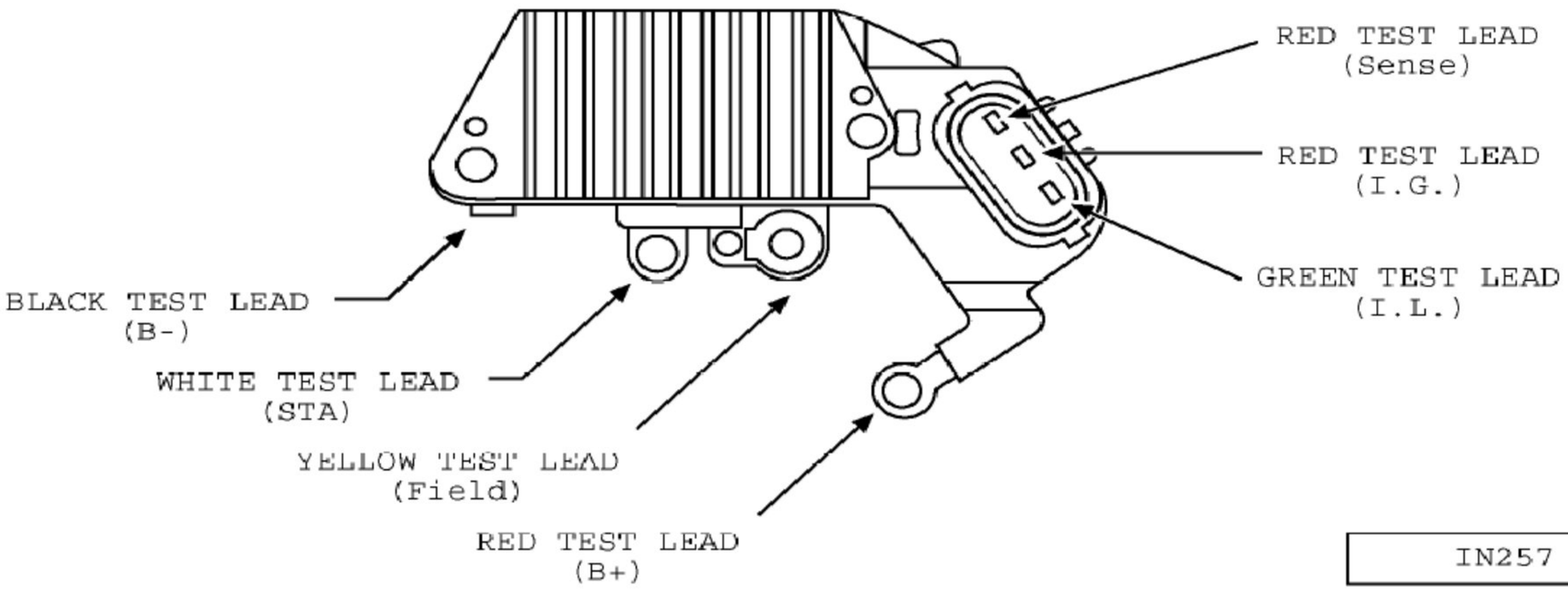

IN257

TRANSPO TESTER INSTRUCTIONS

for NIPPONDENSO type regulators

PART NO.	FLD	VOLT	SET POINT	PART NO.	FLD	VOLT	SET POINT
IN920	**A**	**12**	**14.3**				

1. POWER OFF: Set "Voltage Range" and "FLD" switches to desired setting. Connect the voltage regulator as indicated in the diagram below.

2. POWER ON: Field lamp should blink and meter will indicate approximately the set point voltage indicated in the above table.

3. ADDITIONAL TEST: Remove the white test lead from the terminal marked stator, the indicator light will turn on and the meter will indicate approximately 12V. The field lamp will remain fully on . (This is the soft -start mode of the regulator)

NOTE: Transpo (White test lead) / OE (Red test lead)

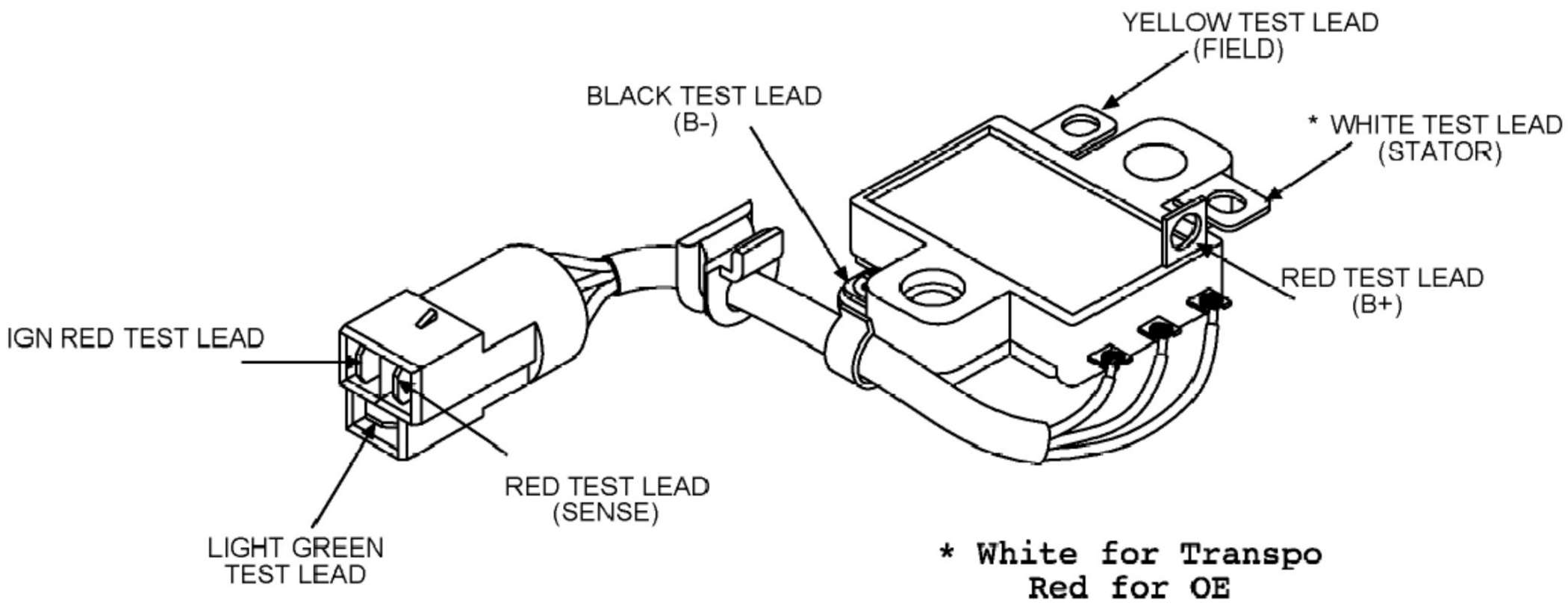

*** White for Transpo**
Red for OE

TRANSPO TESTER INSTRUCTIONS

for NIPPONDENSO type regulators

PART NO.	FLD	VOLT	SET POINT	PART NO.	FLD	VOLT	SET POINT
IN555	**B**	**12**	**14.3**				

1. POWER OFF: Set "Voltage Range" and "FLD" switches to desired setting. Connect the voltage regulator as indicated in the diagram below.

2. POWER ON: Field lamp should blink and meter will indicate approximately the set point voltage indicated in the above table.

3. ADDITIONAL TEST: Remove the white test lead from the terminal marked stator, The indicate approximately 12V. The field lamp will remain fully on, (This is the soft-start mode of the regulator.)

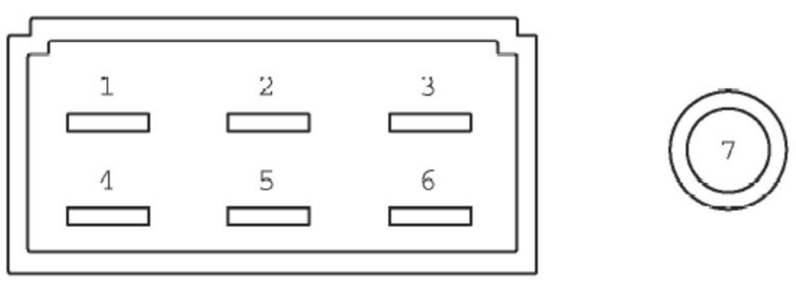

NOTES:
1 - RED TEST LEAD (IG)
2 - RED TEST LEAD (STA)
3 - YELLOW TEST LEAD (F)
4 - BLACK TEST LEAD (B-)
5 - GREEN TEST LEAD (IL)
6 - RED TEST LEAD (B+)
7 - NO CONNECTION

TRANSPO TESTER INSTRUCTIONS

for NIPPONDENSO type regulators

PART NO.	FLD	VOLT	SET POINT	PART NO.	FLD	VOLT	SET POINT
IN220E	**A**	**12**	**14.6**				

1. POWER OFF: Set "Voltage Range" and "FLD" switches to desired setting. Connect the voltage regulator as indicated in the diagram below.

2. POWER ON: Field lamp should blink and meter will indicate approximately the set point voltage indicated in the above table.

3. ADDITIONAL TEST: Remove test lead from the terminal marked "*". The indicator light will turn on and the meter will indicate approximately 14.6v. and the field lamp will remain fully on.

Using VRC1000: To check for over Voltage, push the "Over Voltage" switch and the "Lamp Indicator" will turn on between 16.0V and 17.1V. Push the choke drive and the "Choke Drive Indicator Lamp" will turn on, if present.

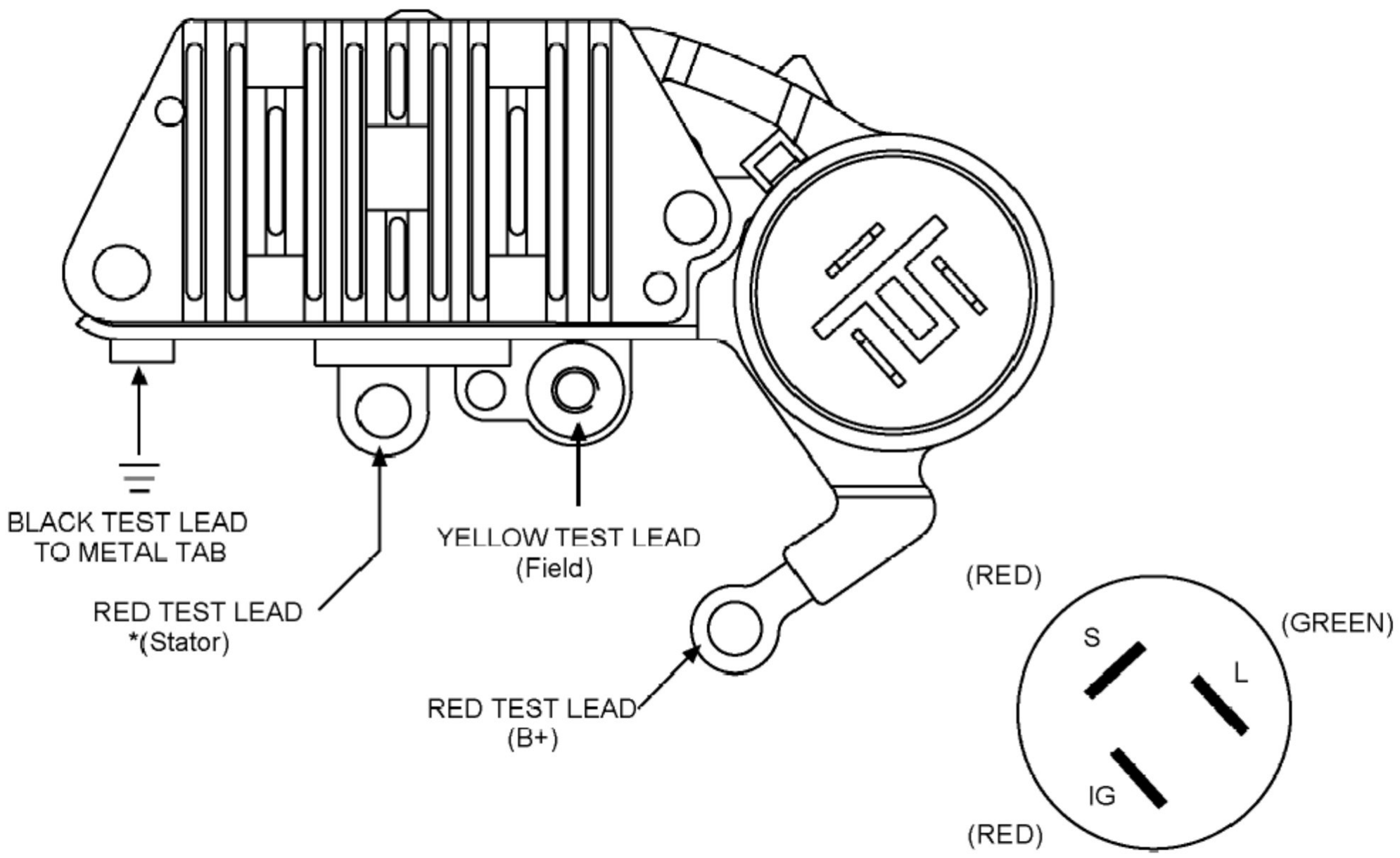

TRANSPO TESTER INSTRUCTIONS

for NIPPONDENSO type regulators

PART NO.	FLD	VOLT	SET POINT	PART NO.	FLD	VOLT	SET POINT
IN449	**A**	**12**	**14.5**				
IN440	**A**	**12**	**14.0**				

1. POWER OFF: Set "Voltage Range" and "FLD" switches to desired setting. Connect the voltage regulator as indicated in the diagram below.

2. POWER ON: Field lamp should blink and meter will indicate approximately the set point voltage indicated in the above table.

3. ADDITIONAL TEST: **Using VRC1000**: To check for over Voltage, push the "Over Voltage" switch and the "Lamp Indicator" will turn on between 16.0V and 17.1V.

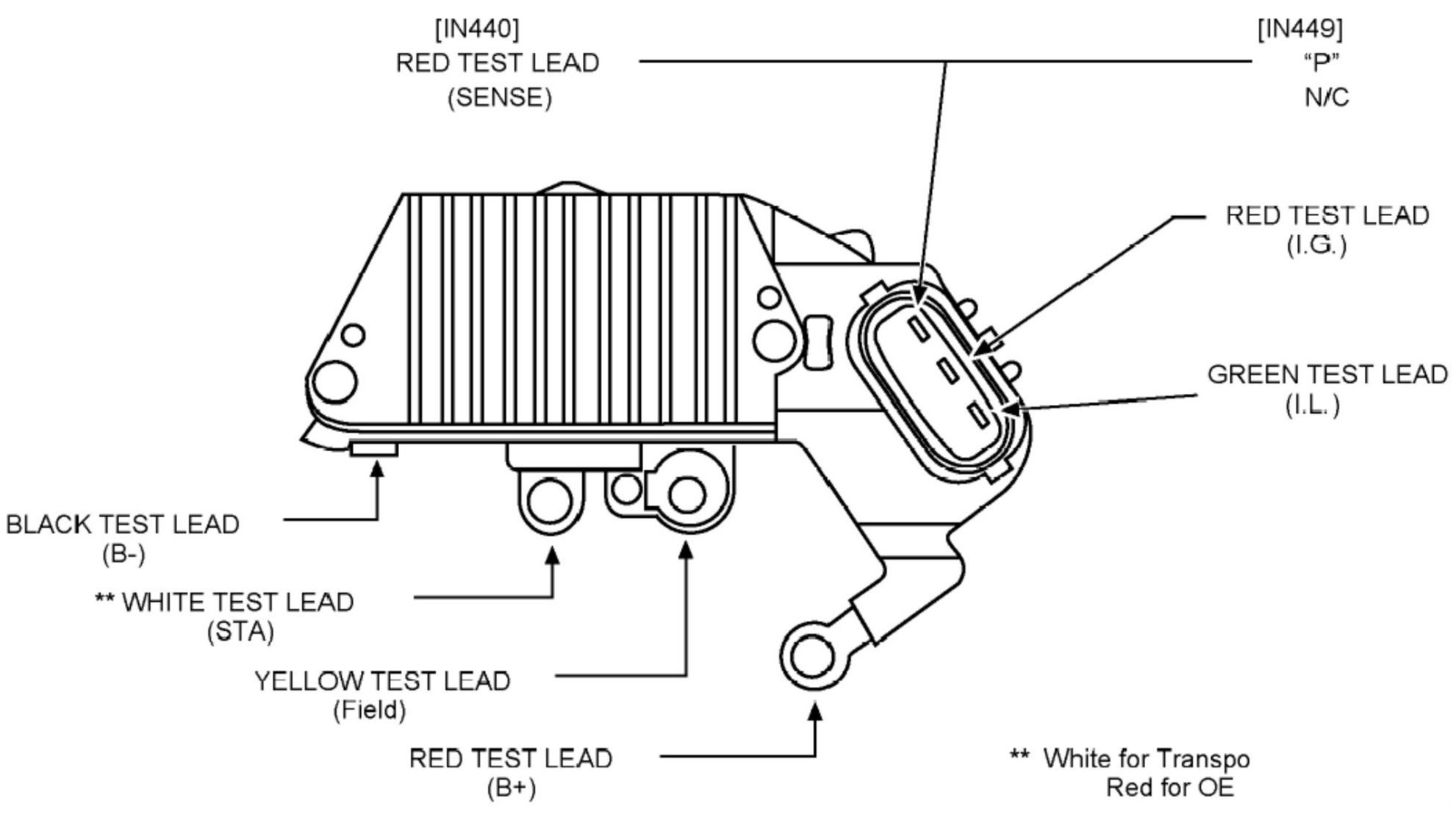

TRANSPO TESTER INSTRUCTIONS

for NIPPONDENSO type regulators

PART NO.	FLD	VOLT	SET POINT	PART NO.	FLD	VOLT	SET POINT
IN450	**A**	**12**	**14.4**				

1. POWER OFF: Set "Voltage Range" and "FLD" switches to desired setting. Connect the voltage regulator as indicated in the diagram below.

2. POWER ON: Field lamp should blink and meter will indicate approximately the set point voltage indicated in the above table.

3. ADDITIONAL TEST: O.E. Needs red lead to stator.

<u>Using VRC1000</u>: To check for over Voltage, push the "Over Voltage" switch and the "Lamp Indicator" will turn on between 16.0V and 17.1V.

* NOTE: On OE Regulator connect a Red test lead to stator (STA)

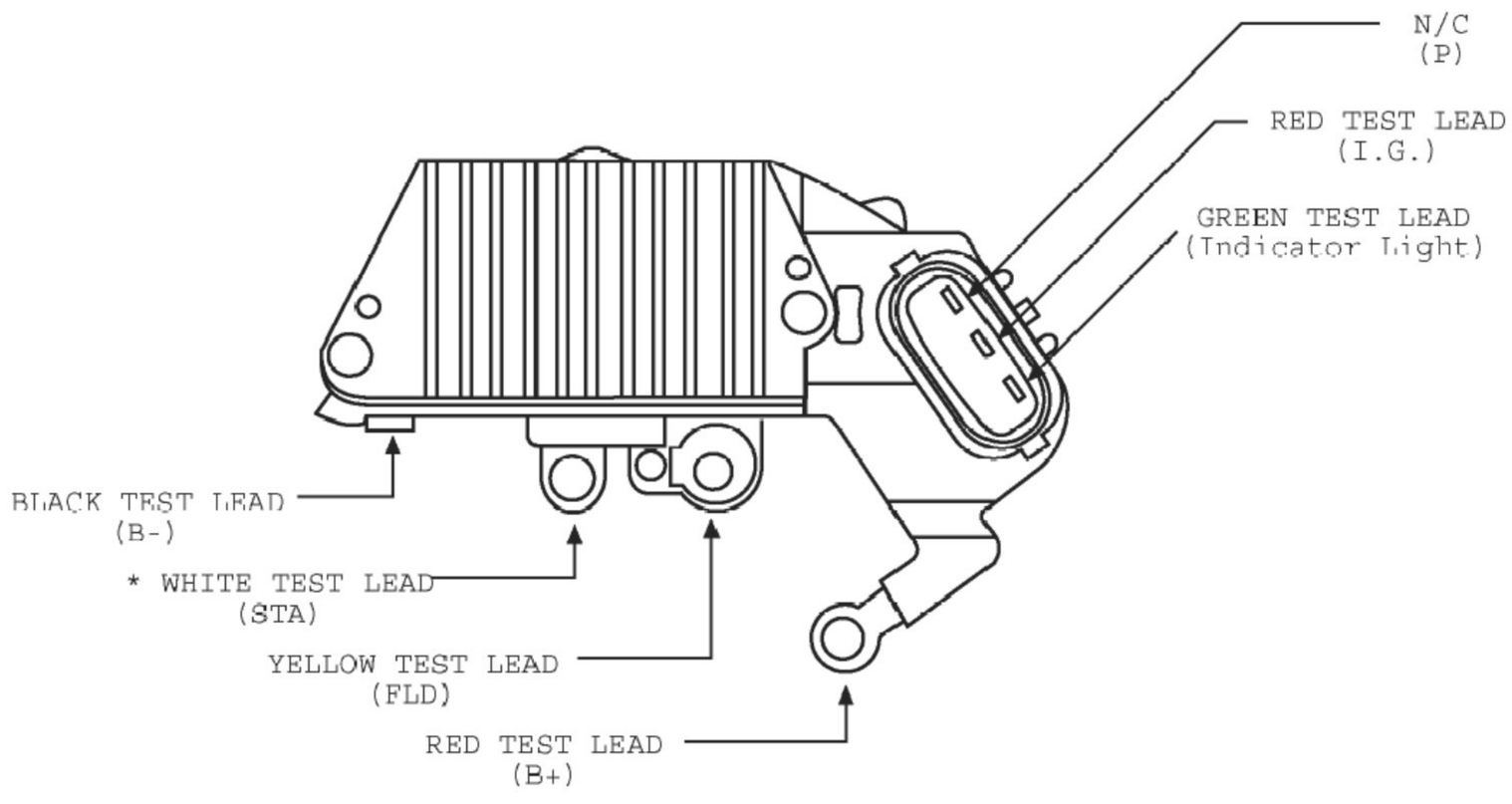

TRANSPO TESTER INSTRUCTIONS

for NIPPONDENSO type regulators

PART NO.	FLD	VOLT	SET POINT	PART NO.	FLD	VOLT	SET POINT
IN445	**A**	**12**	**14.5**				

1. POWER OFF: Set "Voltage Range" and "FLD" switches to desired setting. Connect the voltage regulator as indicated in the diagram below.

2. POWER ON: Field lamp should blink and meter will indicate approximately the set point voltage indicated in the above table.

3. ADDITIONAL TEST: * While regulator is on connect additional black test lead to "C". Voltage should drop to 12.5 volts.

Using VRC1000: To check for over Voltage, push the "Over Voltage" switch and the "Lamp Indicator" will turn on between 16.0V and 17.1V.

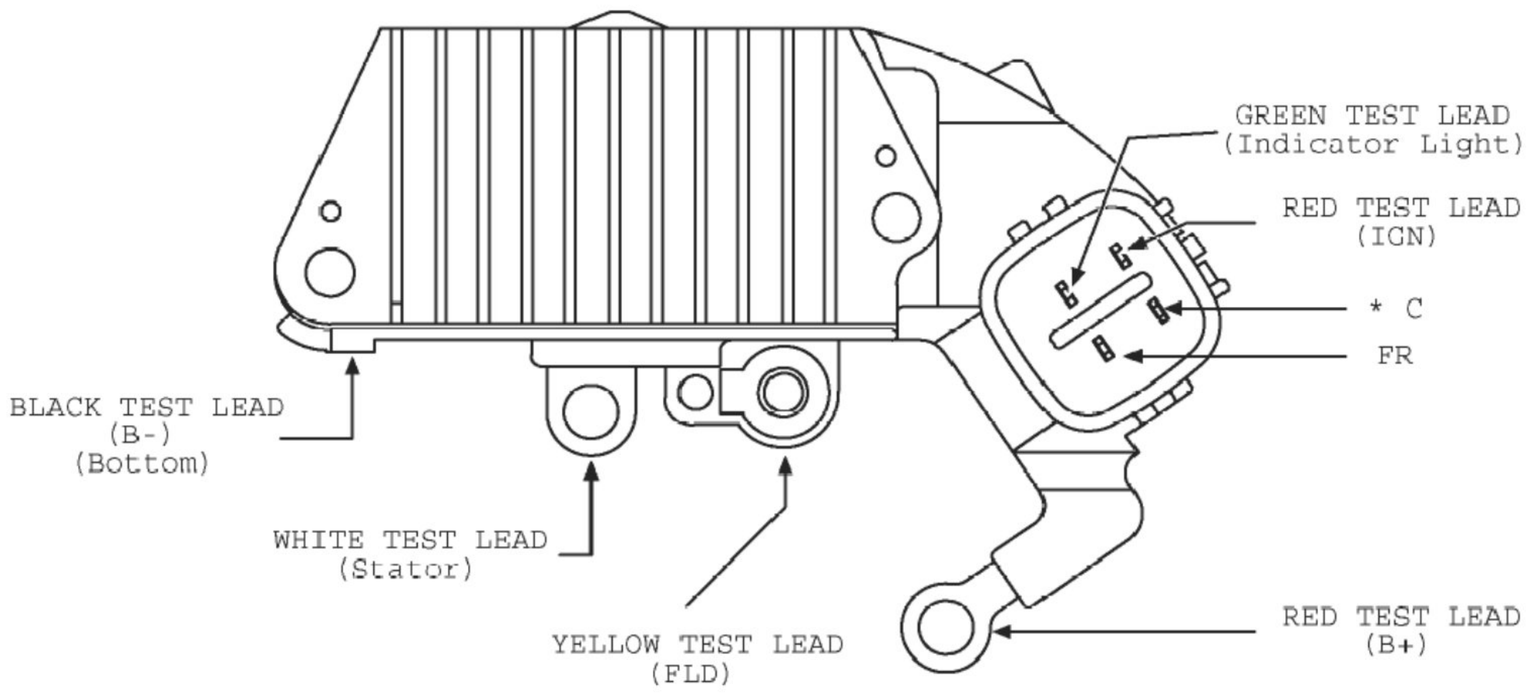

TRANSPO TESTER INSTRUCTIONS

for NIPPONDENSO type regulators

PART NO.	FLD	VOLT	SET POINT	PART NO.	FLD	VOLT	SET POINT
IN453	**A**	**12**	**14.4**				

1. POWER OFF: Set "Voltage Range" and "FLD" switches to desired setting. Connect the voltage regulator as indicated in the diagram below.

2. POWER ON: Field lamp should blink and meter will indicate approximately the set point voltage indicated in the above table.

3. ADDITIONAL TEST: Remove white lead from stator and voltage should drop to 12.0v. and 12v lamp should come on. Field circuit lamp stays on.

Using VRC1000: To check for over Voltage, push the "Over Voltage" switch and the "Lamp Indicator" will turn on between 16.0V and 17.1V.

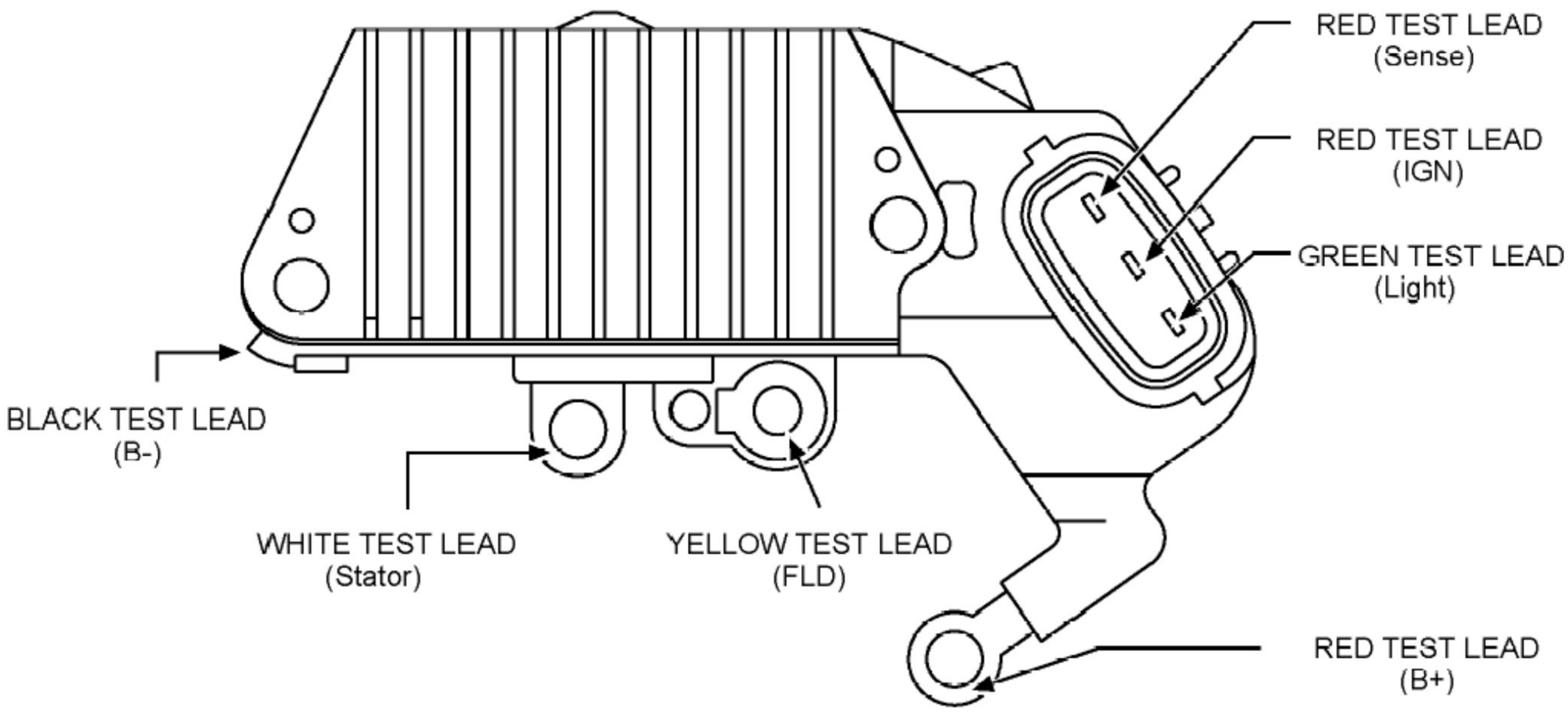

TRANSPO TESTER INSTRUCTIONS

for NIPPONDENSO type regulators

PART NO.	FLD	VOLT	SET POINT	PART NO.	FLD	VOLT	SET POINT
IN455	**A**	**12**	**14.5**				

1. POWER OFF: Set "Voltage Range" and "FLD" switches to desired setting. Connect the voltage regulator as indicated in the diagram below.

2. POWER ON: Field lamp should blink and meter will indicate approximately the set point voltage indicated in the above table.

3. ADDITIONAL TEST: Remove red test lead from terminal marked "S" and lamp turns on and voltage remains the same.

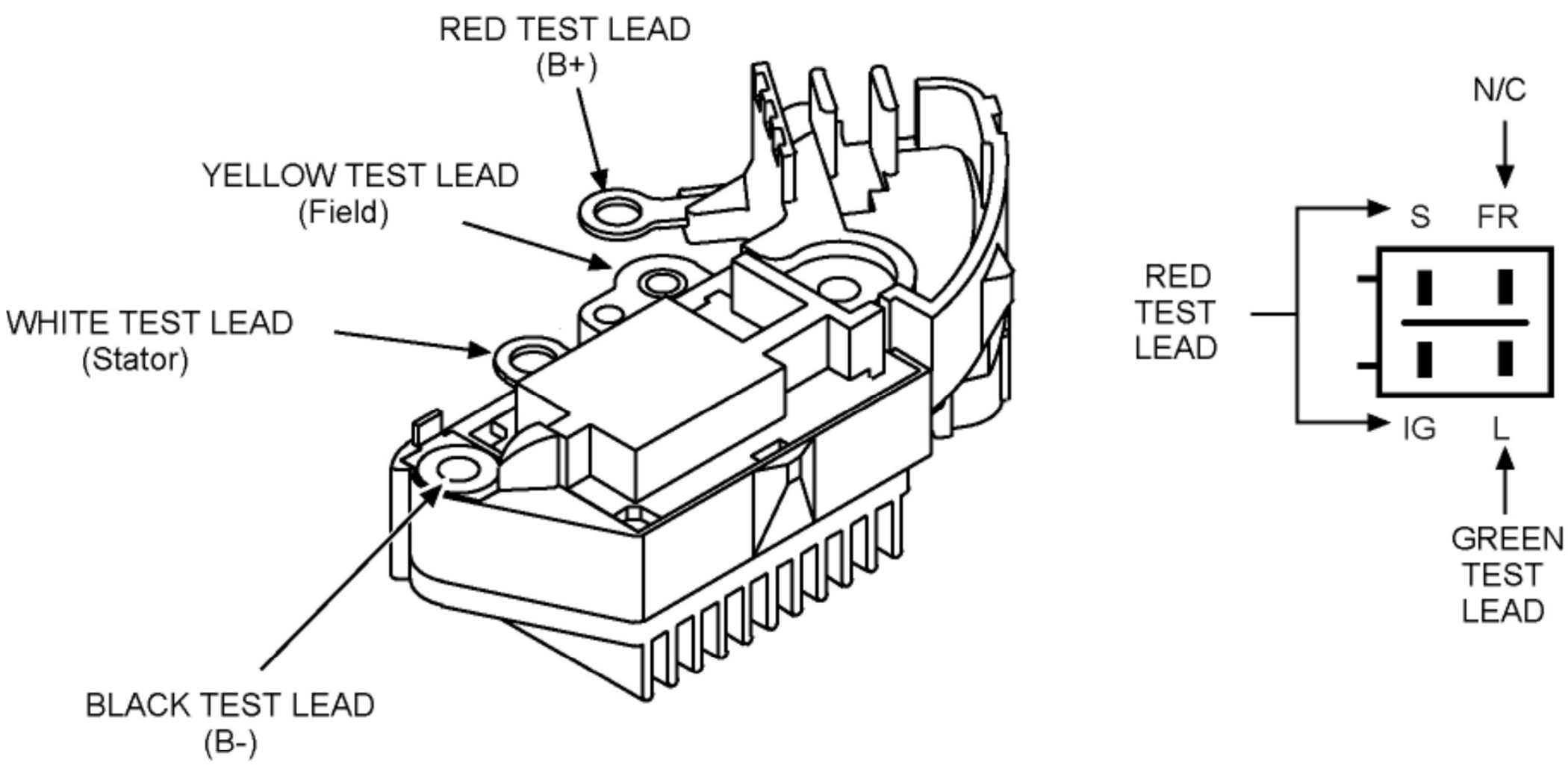

TRANSPO TESTER INSTRUCTIONS

for NIPPONDENSO type regulators

PART NO.	FLD	VOLT	SET POINT	PART NO.	FLD	VOLT	SET POINT
IN215	**A**	**12**	**14.6**				

1. POWER OFF: Set "Voltage Range" and "FLD" switches to desired setting. Connect the voltage regulator as indicated in the diagram below.

2. POWER ON: Field lamp should blink and meter will indicate approximately the set point voltage indicated in the above table.

3. ADDITIONAL TEST: Connect black test lead to "C". Voltage will read 12.6V. Remove white test lead to confirm charge indicator light function.

Using VRC1000: To check for over Voltage, push the "Over Voltage" switch and the "Lamp Indicator" will turn on between 16.0V and 17.1V. Push the choke drive and the "Choke Drive Indicator Lamp" will turn on, if present.

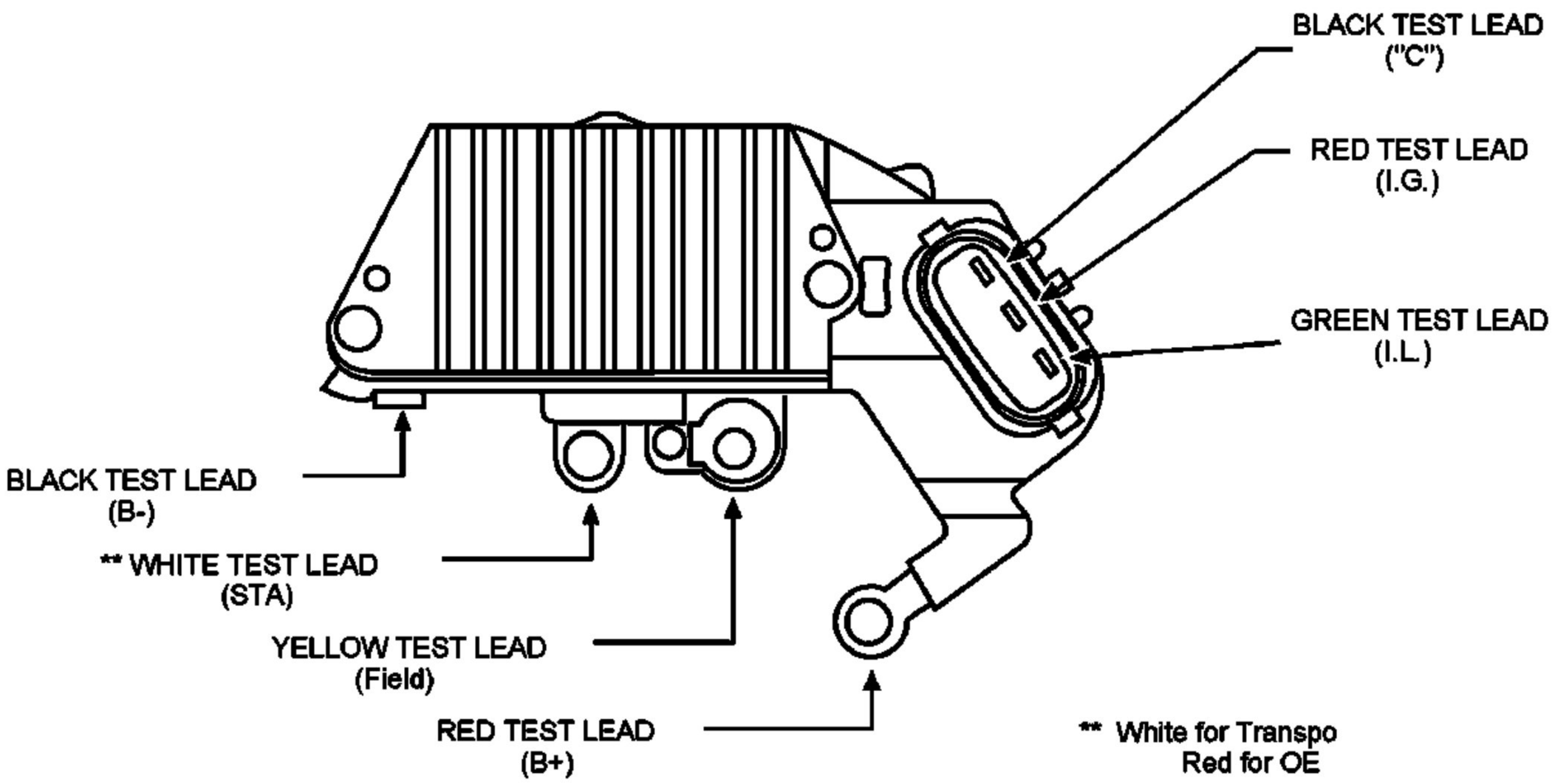

TRANSPO TESTER INSTRUCTIONS

for NIPPONDENSO type regulators

PART NO.	FLD	VOLT	SET POINT	PART NO.	FLD	VOLT	SET POINT
IN277	**A**	**12**	**14.5**				

1. POWER OFF: Set "Voltage Range" and "FLD" switches to desired setting. Connect the voltage regulator as indicated in the diagram below.

2. POWER ON: Field lamp should blink and meter will indicate approximately the set point voltage indicated in the above table.

3. ADDITIONAL TEST: Disconnect “Stator” terminal, “Light” comes on, voltage goes to 12 Volts and field light stays on. Remove “Light” terminal, Volts will read 12 Volts and field light will go off.

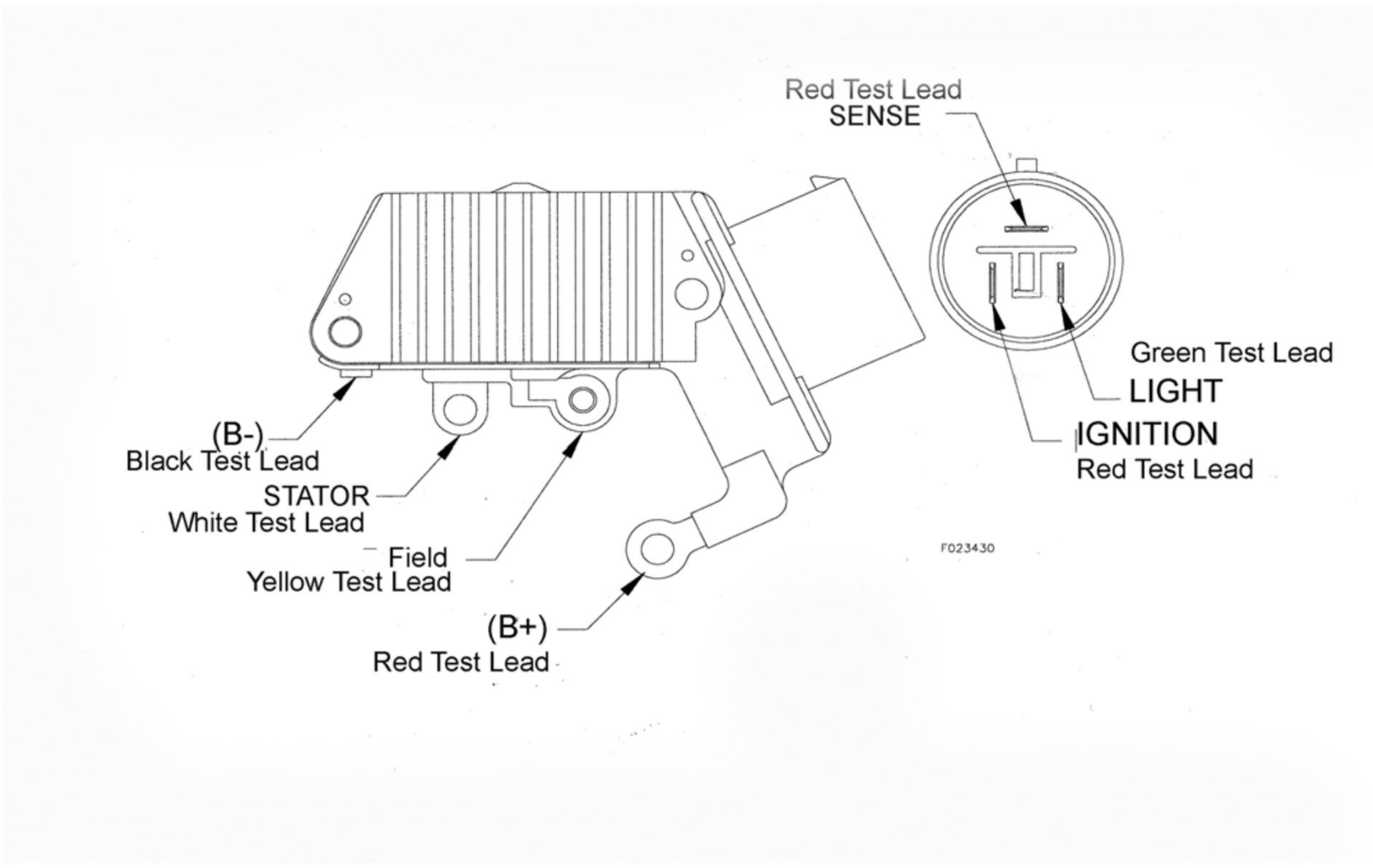

TRANSPO TESTER INSTRUCTIONS

for PARIS RHONE type regulators

PART NO.	FLD	VOLT	SET POINT	PART NO.	FLD	VOLT	SET POINT
IP125	**A**	**12**	**14.6**				
IP125F	**A**	**12**	**14.6**				
IP126	**A**	**12**	**14.6**				
IP955	**A**	**24**	**28.4**				

1. POWER OFF: Set "Voltage Range" and "FLD" switches to desired setting. Connect the voltage regulator as indicated in the diagram below.

2. POWER ON: Field lamp should blink and meter will indicate approximately the set point voltage indicated in the above table.

3. ADDITIONAL TEST:

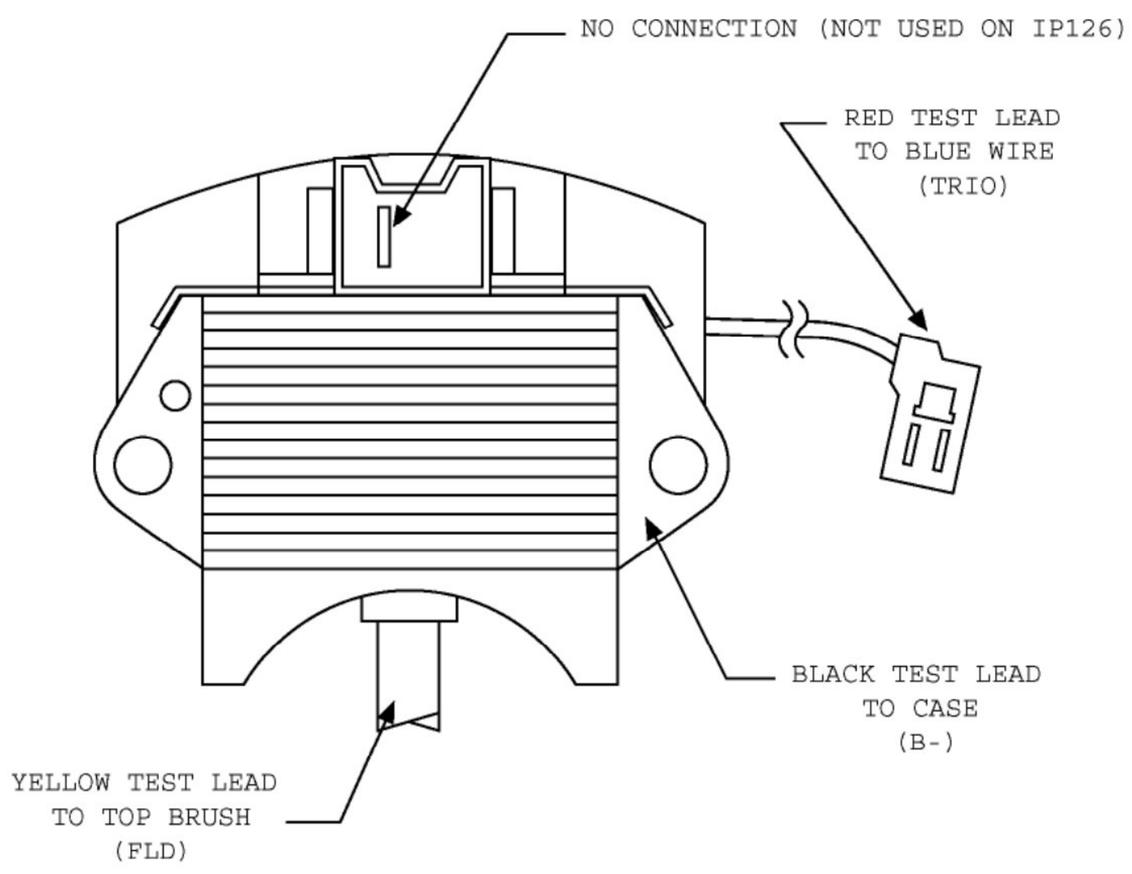

TRANSPO TESTER INSTRUCTIONS

for PARIS RHONE type regulators

PART NO.	FLD	VOLT	SET POINT	PART NO.	FLD	VOLT	SET POINT
IP127	**A**	**12**	**14.7**				

1. POWER OFF: Set "Voltage Range" and "FLD" switches to desired setting. Connect the voltage regulator as indicated in the diagram below.

2. POWER ON: Field lamp should blink and meter will indicate approximately the set point voltage indicated in the above table.

3. ADDITIONAL TEST:

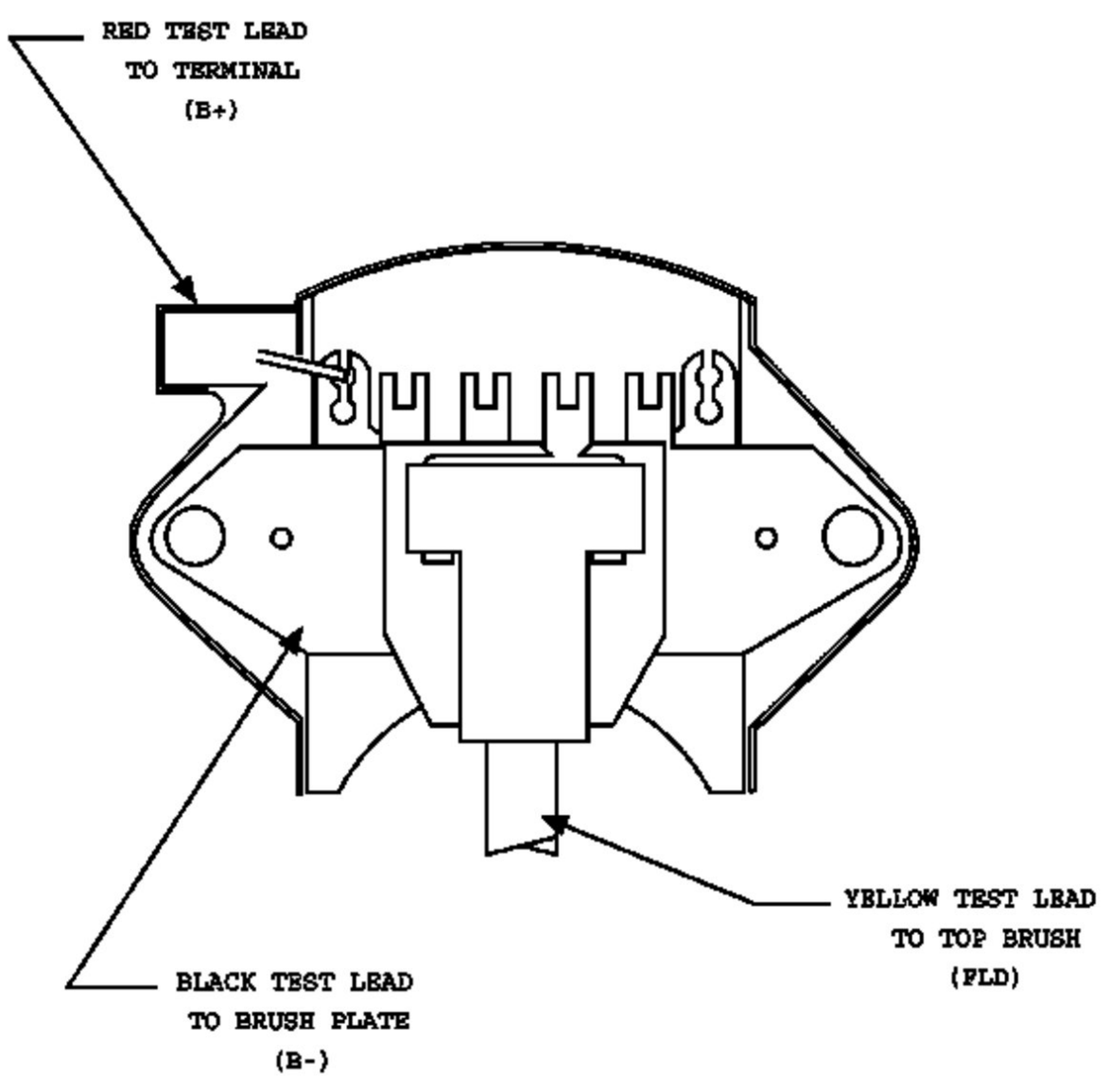

TRANSPO TESTER INSTRUCTIONS

for PARIS RHONE type regulators

PART NO.	FLD	VOLT	SET POINT	PART NO.	FLD	VOLT	SET POINT
IP135	**A**	**12**	**14.3**				
IP135B	**A**	**12**	**14.3**				
IP129B	**A**	**24**	**27.5**				

1. POWER OFF: Set "Voltage Range" and "FLD" switches to desired setting. Connect the voltage regulator as indicated in the diagram below.

2. POWER ON: Field lamp should blink and meter will indicate approximately the set point voltage indicated in the above table.

3. ADDITIONAL TEST:

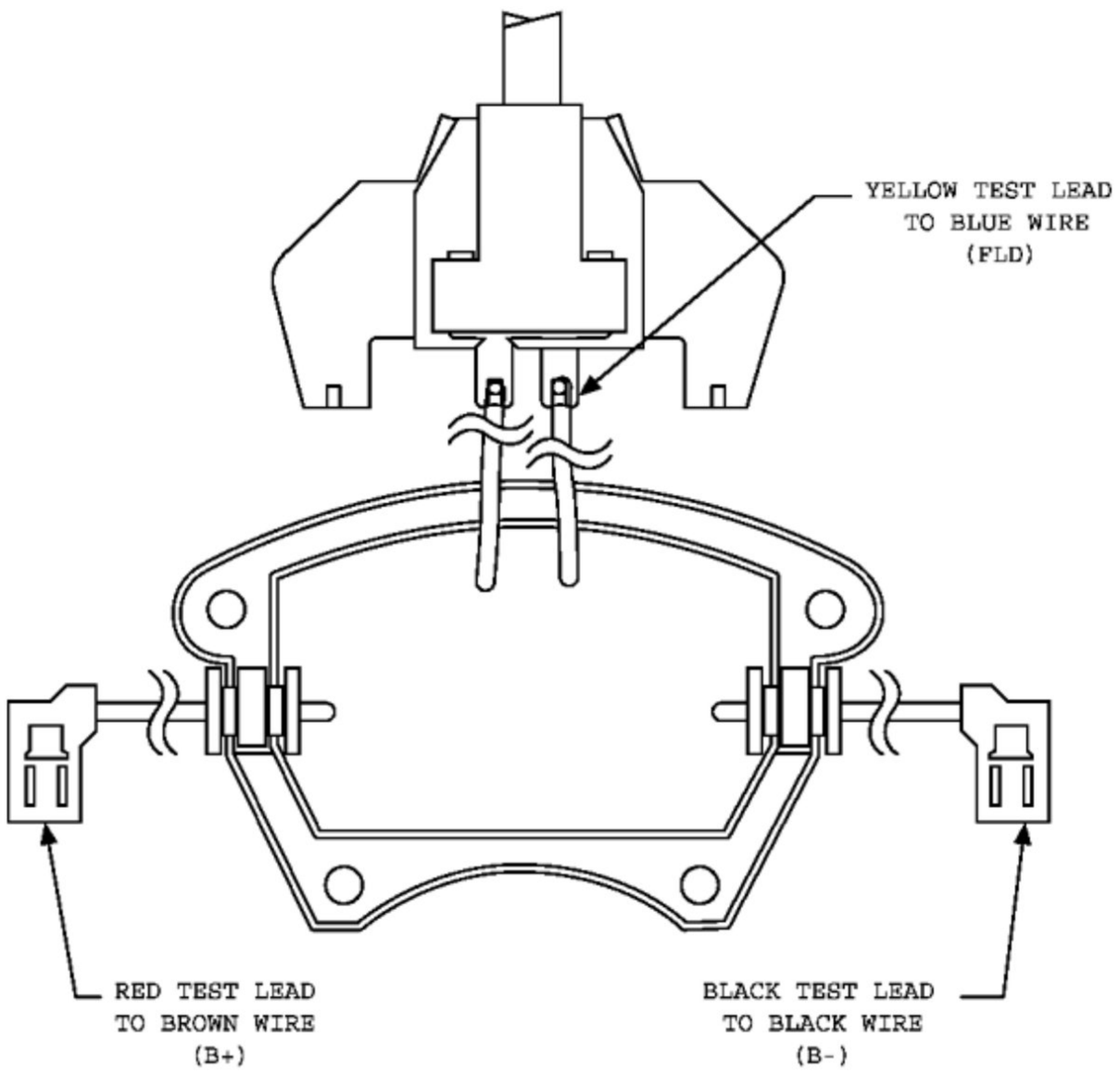

TRANSPO TESTER INSTRUCTIONS

for PARIS RHONE type regulators

PART NO.	FLD	VOLT	SET POINT	PART NO.	FLD	VOLT	SET POINT
IP122	**A**	**12**	**14.4**	**IP1655**	**A**	**12**	**14.4**
IP152	**A**	**12**	**14.2**				
IP1639	**A**	**12**	**14.4**				
IP1652F	**A**	**12**	**14.4**				

1. POWER OFF: Set "Voltage Range" and "FLD" switches to desired setting. Connect the voltage regulator as indicated in the diagram below.

2. POWER ON: Field lamp should blink and meter will indicate approximately the set point voltage indicated in the above table.

3. ADDITIONAL TEST: Remove black test lead from the blue wire of the regulator . Indicator light should turn on and meter will still indicate the set point voltage.

Using VRC1000: To check for over Voltage, push the "Over Voltage" switch and the "Lamp Indicator" will turn on between 16.0V and 17.1V.

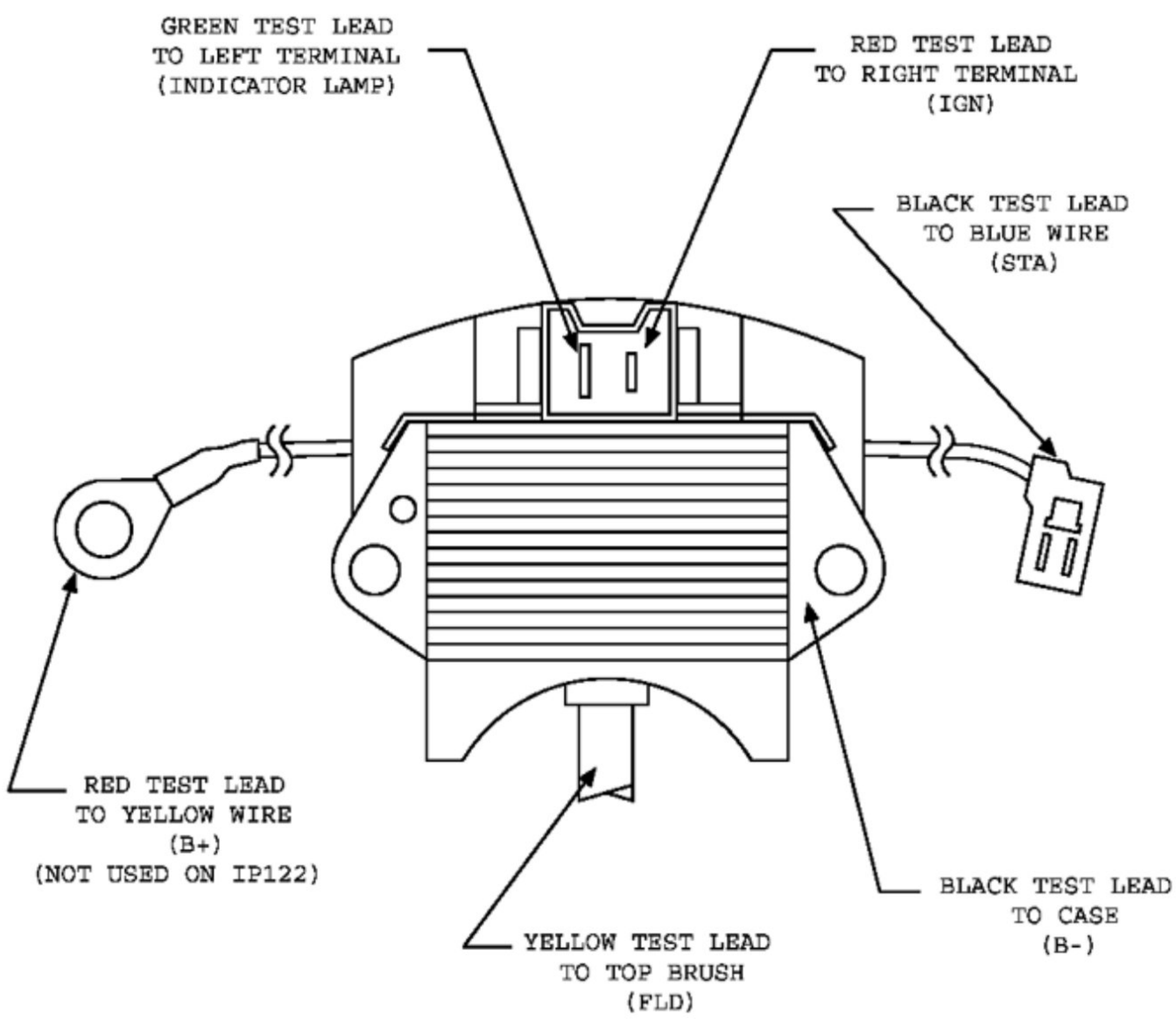

TRANSPO TESTER INSTRUCTIONS

for PARIS RHONE type regulators

PART NO.	FLD	VOLT	SET POINT	PART NO.	FLD	VOLT	SET POINT
IP137	**A**	**12**	**14.6**				
IP1903	**A**	**12**	**14.6**				
IP2700	**A**	**12**	**14.6**				

1. POWER OFF: Set "Voltage Range" and "FLD" switches to desired setting. Connect the voltage regulator as indicated in the diagram below.

2. POWER ON: Field lamp should blink and meter will indicate approximately the set point voltage indicated in the above table.

3. ADDITIONAL TEST:

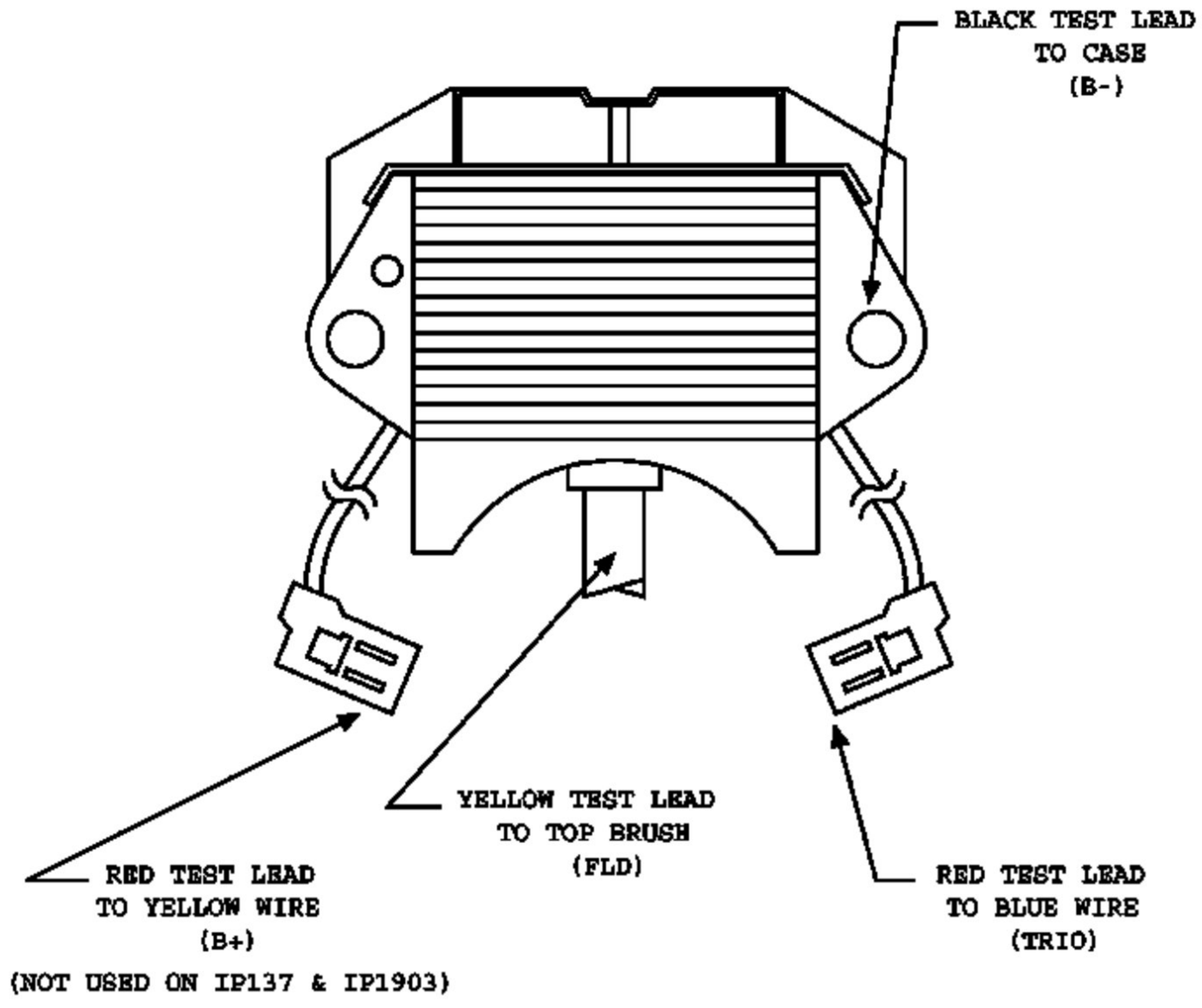

TRANSPO TESTER INSTRUCTIONS

for PARIS RHONE type regulators

PART NO.	FLD	VOLT	SET POINT	PART NO.	FLD	VOLT	SET POINT
IP735B	**A**	**12**	**14.3**				
IP729B	**A**	**12**	**14.3**				

1. POWER OFF: Set "Voltage Range" and "FLD" switches to desired setting. Connect the voltage regulator as indicated in the diagram below.

2. POWER ON: Field lamp should blink and meter will indicate approximately the set point voltage indicated in the above table.

3. ADDITIONAL TEST:

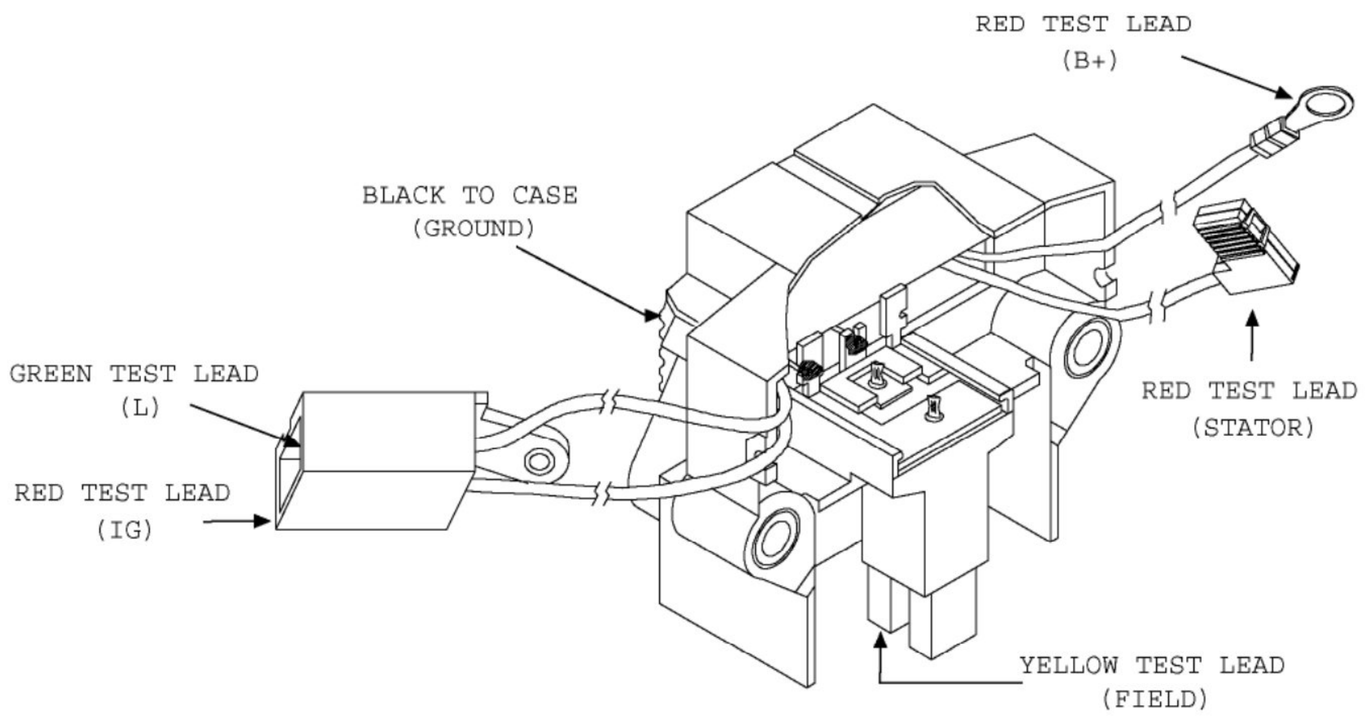

TRANSPO TESTER INSTRUCTIONS

for PARIS RHONE type regulators

PART NO.	FLD	VOLT	SET POINT	PART NO.	FLD	VOLT	SET POINT
IP130	**A**	**12**	**14.3**				

1. POWER OFF: Set "Voltage Range" and "FLD" switches to desired setting. Connect the voltage regulator as indicated in the diagram below.

2. POWER ON: Field lamp should blink and meter will indicate approximately the set point voltage indicated in the above table.

3. ADDITIONAL TEST: Remove red test lead from the stator wire of the regulator. indicator light should turn on and meter will still indicate the set point voltage.

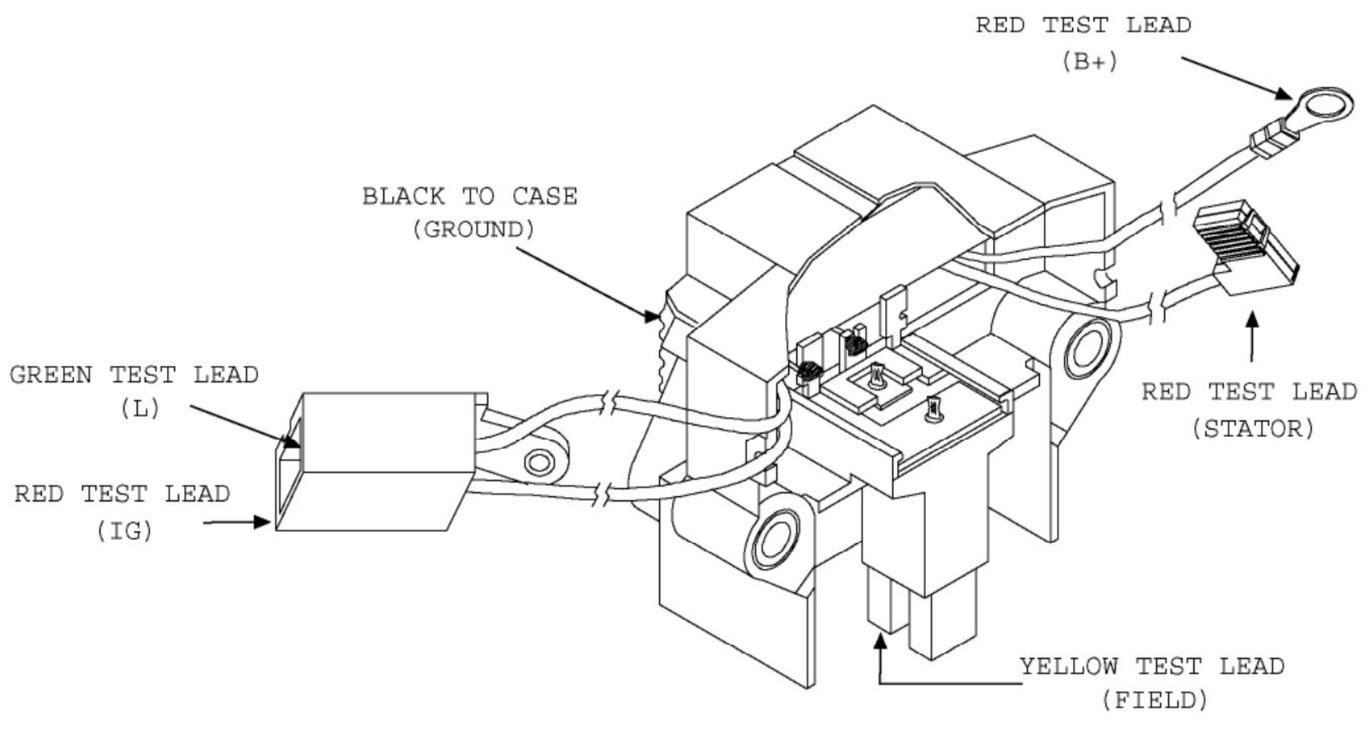

TRANSPO TESTER INSTRUCTIONS

for PARIS RHONE type regulators

PART NO.	FLD	VOLT	SET POINT	PART NO.	FLD	VOLT	SET POINT
IP1926	**A**	**12**	**14.6**				

1. POWER OFF: Set "Voltage Range" and "FLD" switches to desired setting. Connect the voltage regulator as indicated in the diagram below.

2. POWER ON: Field lamp should blink and meter will indicate approximately the set point voltage indicated in the above table.

3. ADDITIONAL TEST:

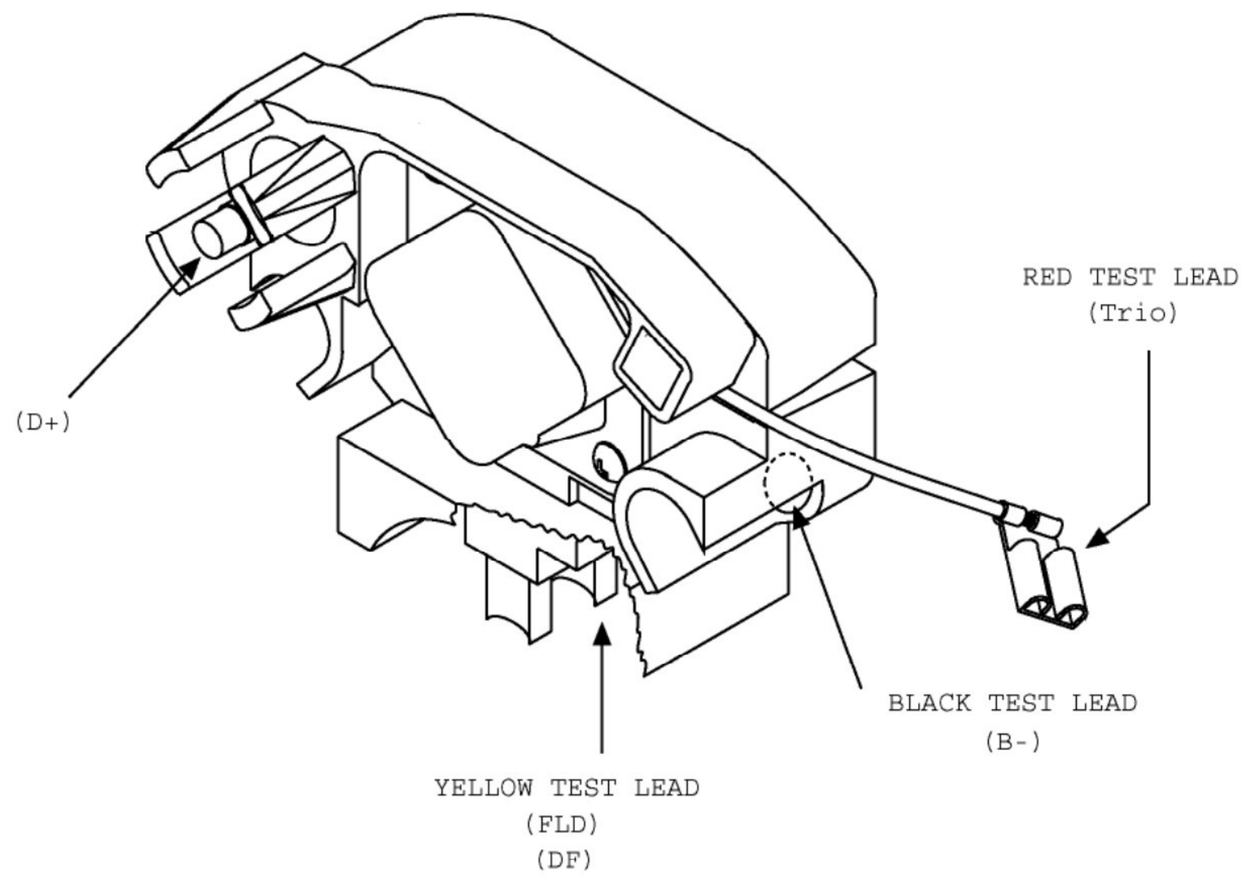

TRANSPO TESTER INSTRUCTIONS

for PARIS RHONE type regulators

PART NO.	FLD	VOLT	SET POINT	PART NO.	FLD	VOLT	SET POINT
IP736	**A**	**12**	**14.1**				

1. POWER OFF: Set "Voltage Range" and "FLD" switches to desired setting. Connect the voltage regulator as indicated in the diagram below.

2. POWER ON: Field lamp should blink and meter will indicate approximately the set point voltage indicated in the above table.

3. ADDITIONAL TEST:

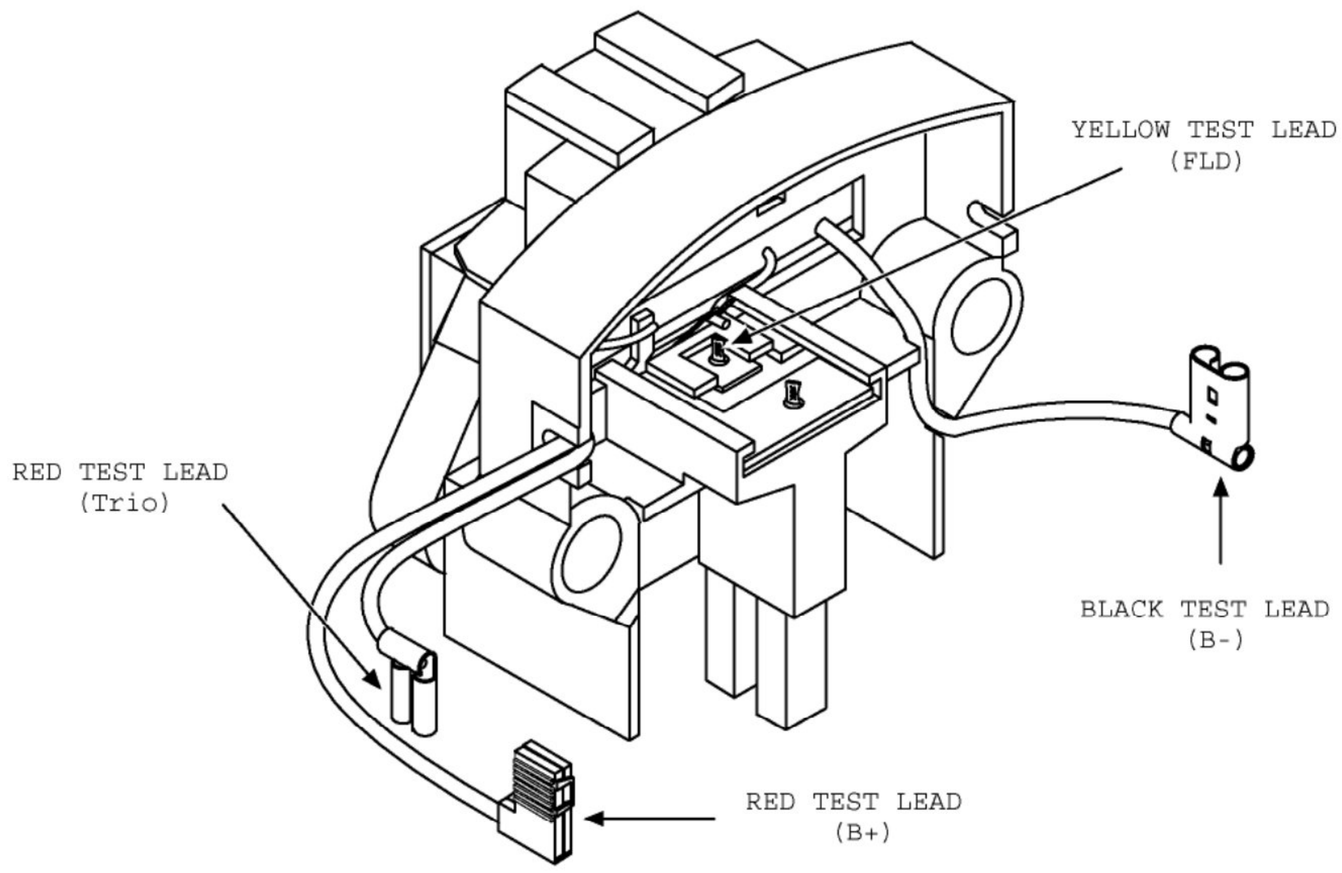

TRANSPO TESTER INSTRUCTIONS

for PARIS RHONE type regulators

PART NO.	FLD	VOLT	SET POINT	PART NO.	FLD	VOLT	SET POINT
IP123	**A**	**12**	**14.5**				

1. POWER OFF: Set "Voltage Range" and "FLD" switches to desired setting. Connect the voltage regulator as indicated in the diagram below.

2. POWER ON: Field lamp should blink and meter will indicate approximately the set point voltage indicated in the above table.

3. ADDITIONAL TEST: Remove black test lead from blue wire. Indicator light should turn on and voltage will remain the same.

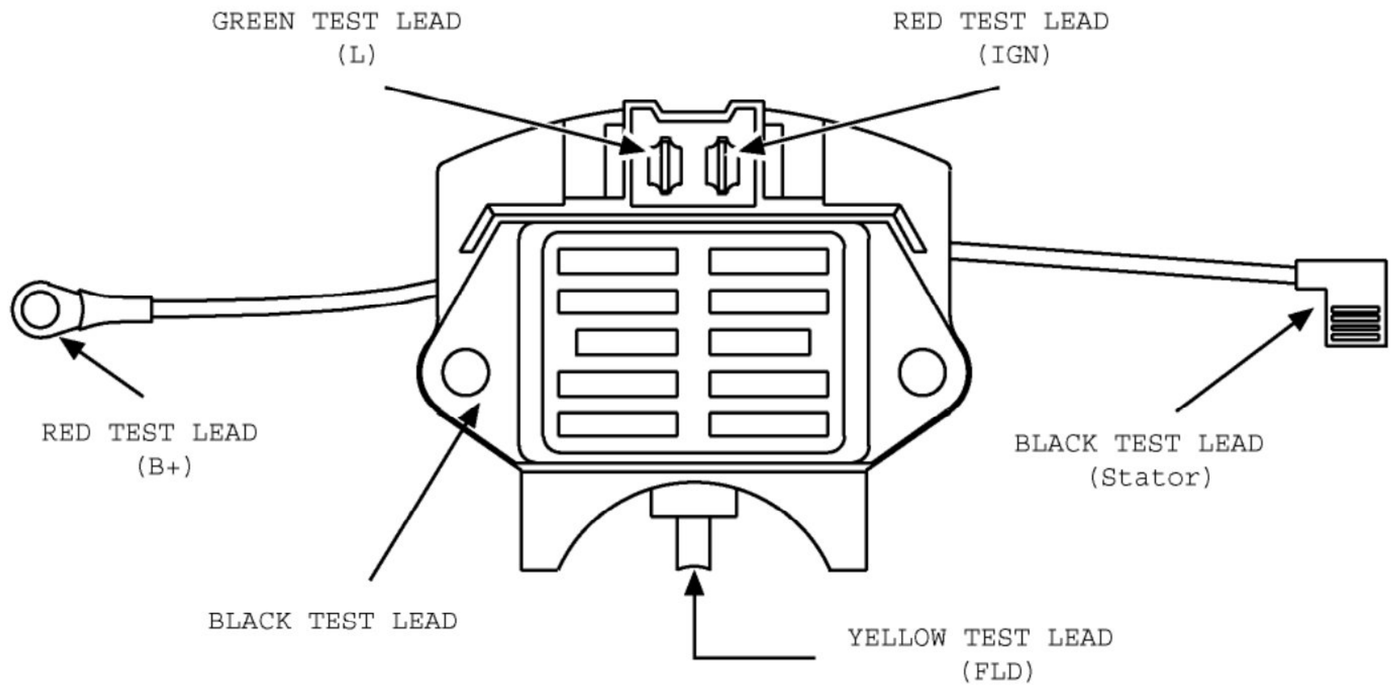

TRANSPO TESTER INSTRUCTIONS

for PARIS RHONE type regulators

PART NO.	FLD	VOLT	SET POINT	PART NO.	FLD	VOLT	SET POINT
IP1652	**A**	**12**	**14.4**				

1. POWER OFF: Set "Voltage Range" and "FLD" switches to desired setting. Connect the voltage regulator as indicated in the diagram below.

2. POWER ON: Field lamp should blink and meter will indicate approximately the set point voltage indicated in the above table.

3. ADDITIONAL TEST: Remove white test lead from the blue wire of the regulator. Indicator light should turn on and meter will read approximately 12 volts.

Using VRC1000: To check for over Voltage, push the "Over Voltage" switch and the "Lamp Indicator" will turn on between 16.0V and 17.1V.

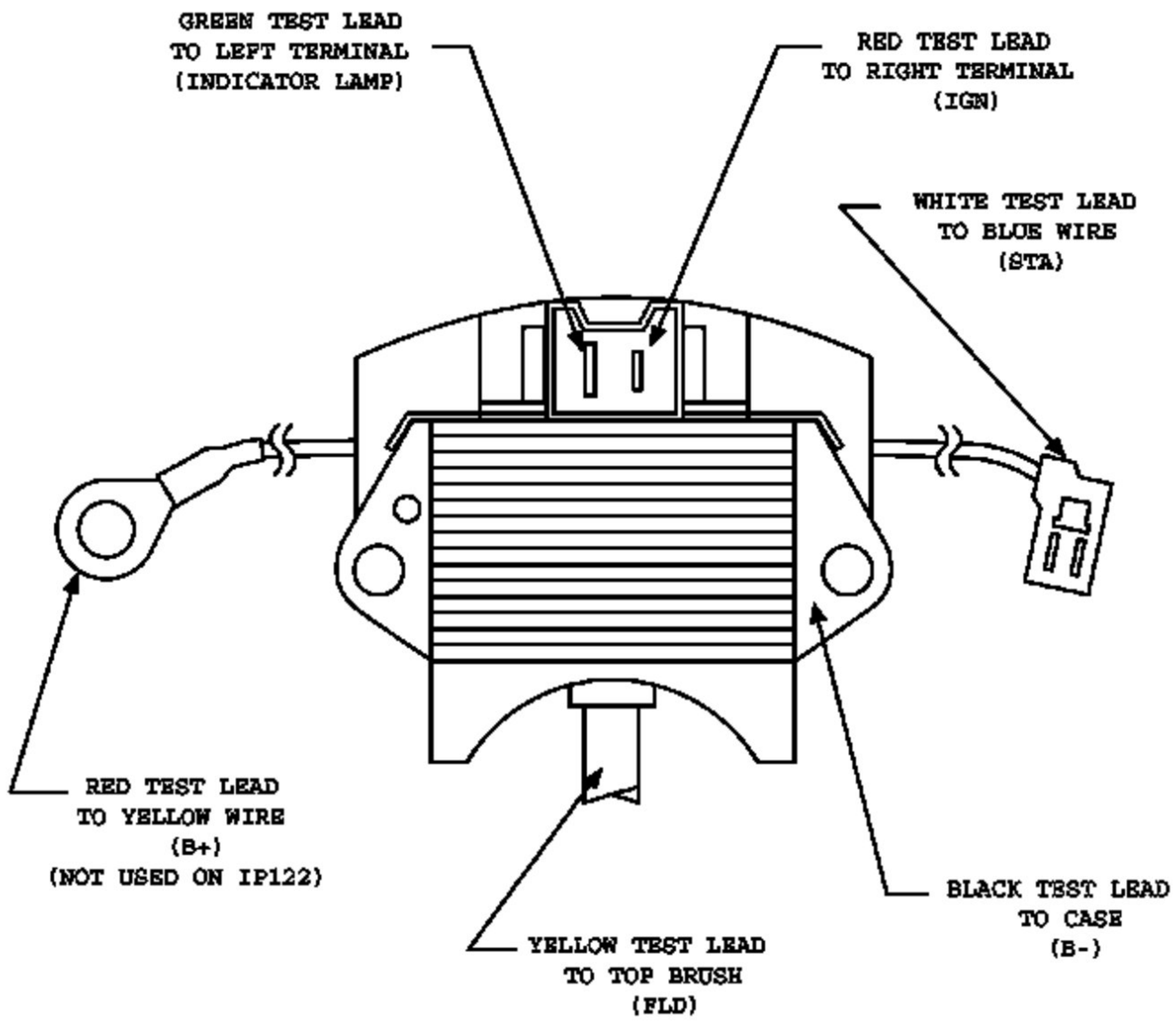

TRANSPO TESTER INSTRUCTIONS

for PRESTOLITE type regulators

PART NO.	FLD	VOLT	SET POINT	PART NO.	FLD	VOLT	SET POINT
P8-328	**B**	**12**	**14.2**	**P8-407**	**B**	**12**	**15.0**
P8-328A	**B**	**12**	**14.2**	**P8-407A**	**B**	**12**	**15.0**
P8-379	**B**	**12**	**15.0**	**P8-406**	**B**	**12**	**15.0**
P8-379A	**B**	**12**	**15.0**	**P8-406A**	**B**	**12**	**15.0**

1. POWER OFF: Set "Voltage Range" and "FLD" switches to desired setting. Connect the voltage regulator as indicated in the diagram below.

2. POWER ON: Field lamp should blink and meter will indicate approximately the set point voltage indicated in the above table.

3. ADDITIONAL TEST:

Part #	VSH #	Tester Conn. POS / NEG / FLD
P8-328/A	6201A	RED / CASE / GREEN
P8-379/A	6201AB	BROWN / BLACK / GREEN
P8-407/A	6201ACY	ORANGE / BLACK / GREEN
P8-406/A	6201ADY	BROWN / BLACK / GREEN
P8-403/A	6201AE	RED / CASE / STUD
P8-404/A	6201AFY	PURPLE / BLACK / YELLOW
P8-410/A	6201AGY	PURPL E / BLACK / YELLOW
P8-343/A	6201D	RED / CASE / GREEN
P8-354/A	6201G	RED / BLACK / GREEN
P8-355/A	6201H	ORANGE / BLACK / GREEN
P8-357/A	6201K	RED / BLACK / GREEN
P8-352/A	6201N	STUD / BLACK / GREEN
P8-368/A	6201W	RED / CASE / GREEN
P8-405/A	6201JY	RED / CASE / STUD
P8-393/A	6401	ORANGE / CASE / GREEN

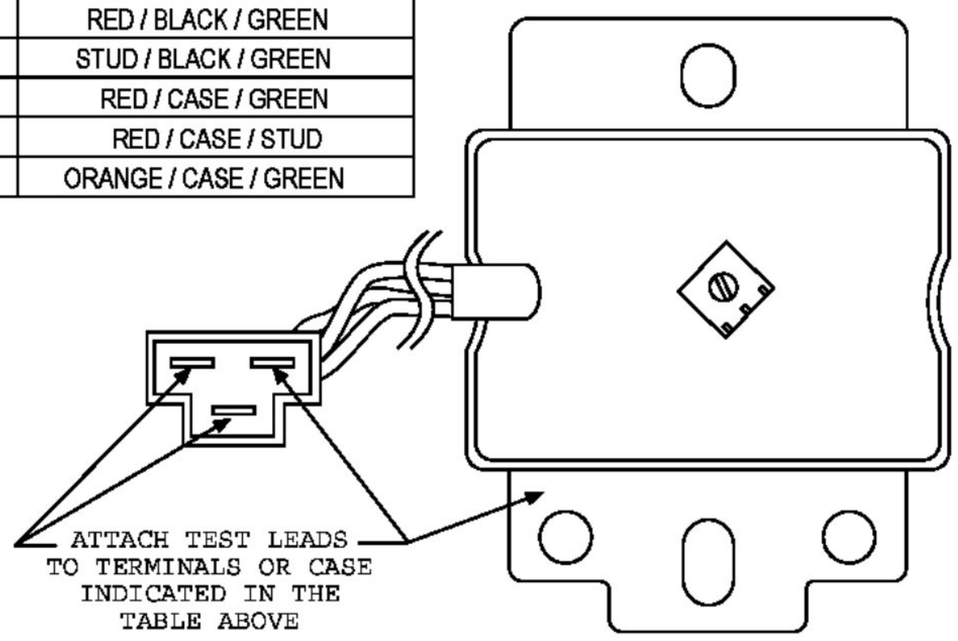

TRANSPO TESTER INSTRUCTIONS

for PRESTOLITE type regulators

PART NO.	FLD	VOLT	SET POINT	PART NO.	FLD	VOLT	SET POINT
P8-403	**B**	**12**	**14.2**	**P8-410**	**B**	**12**	**14.2**
P8-403A	**B**	**12**	**14.2**	**P8-410A**	**B**	**12**	**14.2**
P8-404	**B**	**12**	**14.2**	**P8-343**	**B**	**12**	**15.0**
P8-404A	**B**	**12**	**14.2**	**P8-343A**	**B**	**12**	**15.0**

1. POWER OFF: Set "Voltage Range" and "FLD" switches to desired setting. Connect the voltage regulator as indicated in the diagram below.

2. POWER ON: Field lamp should blink and meter will indicate approximately the set point voltage indicated in the above table.

3. ADDITIONAL TEST:

Part #	VSH #	Tester Conn. POS / NEG / FLD
P8-328/A	6201A	RED / CASE / GREEN
P8-379/A	6201AB	BROWN / BLACK / GREEN
P8-407/A	6201ACY	ORANGE / BLACK / GREEN
P8-406/A	6201ADY	BROWN / BLACK / GREEN
P8-403/A	6201AE	RED / CASE / STUD
P8-404/A	6201AFY	PURPLE / BLACK / YELLOW
P8-410/A	6201AGY	PURPL E / BLACK / YELLOW
P8-343/A	6201D	RED / CASE / GREEN
P8-354/A	6201G	RED / BLACK / GREEN
P8-355/A	6201H	ORANGE / BLACK / GREEN
P8-357/A	6201K	RED / BLACK / GREEN
P8-352/A	6201N	STUD / BLACK / GREEN
P8-368/A	6201W	RED / CASE / GREEN
P8-405/A	6201JY	RED / CASE / STUD
P8-393/A	6401	ORANGE / CASE / GREEN

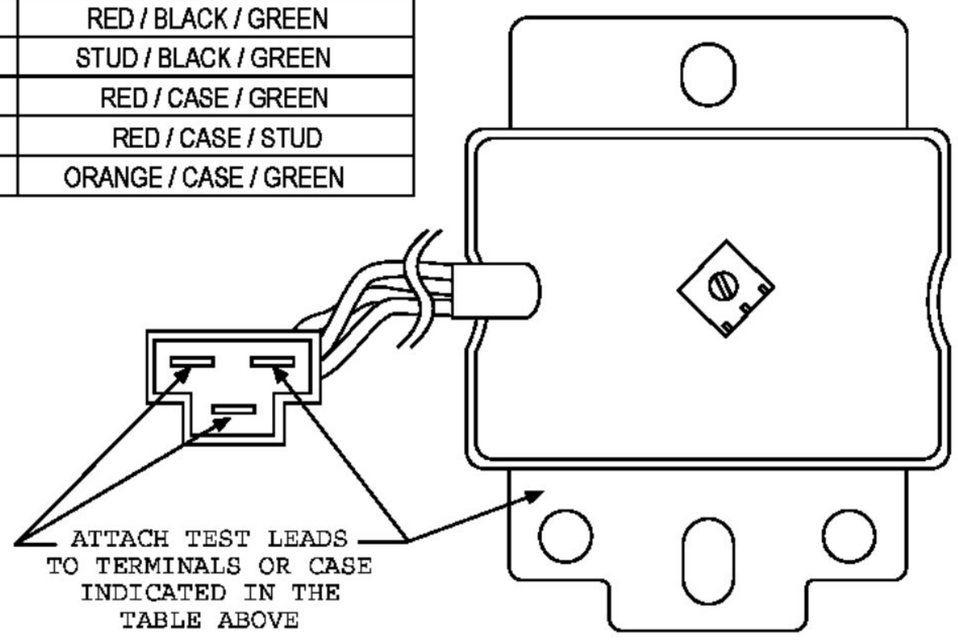

TRANSPO TESTER INSTRUCTIONS

for PRESTOLITE type regulators

PART NO.	FLD	VOLT	SET POINT	PART NO.	FLD	VOLT	SET POINT
P8-354	**B**	**12**	**14.2**	**P8-357**	**B**	**12**	**14.2**
P8-354A	**B**	**12**	**14.2**	**P8-357A**	**B**	**12**	**14.2**
P8-355	**B**	**12**	**14.2**	**P8-352**	**B**	**12**	**14.2**
P8-355A	**B**	**12**	**14.2**	**P8-352A**	**B**	**12**	**14.2**

1. POWER OFF: Set "Voltage Range" and "FLD" switches to desired setting. Connect the voltage regulator as indicated in the diagram below.

2. POWER ON: Field lamp should blink and meter will indicate approximately the set point voltage indicated in the above table.

3. ADDITIONAL TEST:

Part #	VSH #	Tester Conn. POS / NEG / FLD
P8-328/A	6201A	RED / CASE / GREEN
P8-379/A	6201AB	BROWN / BLACK / GREEN
P8-407/A	6201ACY	ORANGE / BLACK / GREEN
P8-406/A	6201ADY	BROWN / BLACK / GREEN
P8-403/A	6201AE	RED / CASE / STUD
P8-404/A	6201AFY	PURPLE / BLACK / YELLOW
P8-410/A	6201AGY	PURPL E / BLACK / YELLOW
P8-343/A	6201D	RED / CASE / GREEN
P8-354/A	6201G	RED / BLACK / GREEN
P8-355/A	6201H	ORANGE / BLACK / GREEN
P8-357/A	6201K	RED / BLACK / GREEN
P8-352/A	6201N	STUD / BLACK / GREEN
P8-368/A	6201W	RED / CASE / GREEN
P8-405/A	6201JY	RED / CASE / STUD
P8-393/A	6401	ORANGE / CASE / GREEN

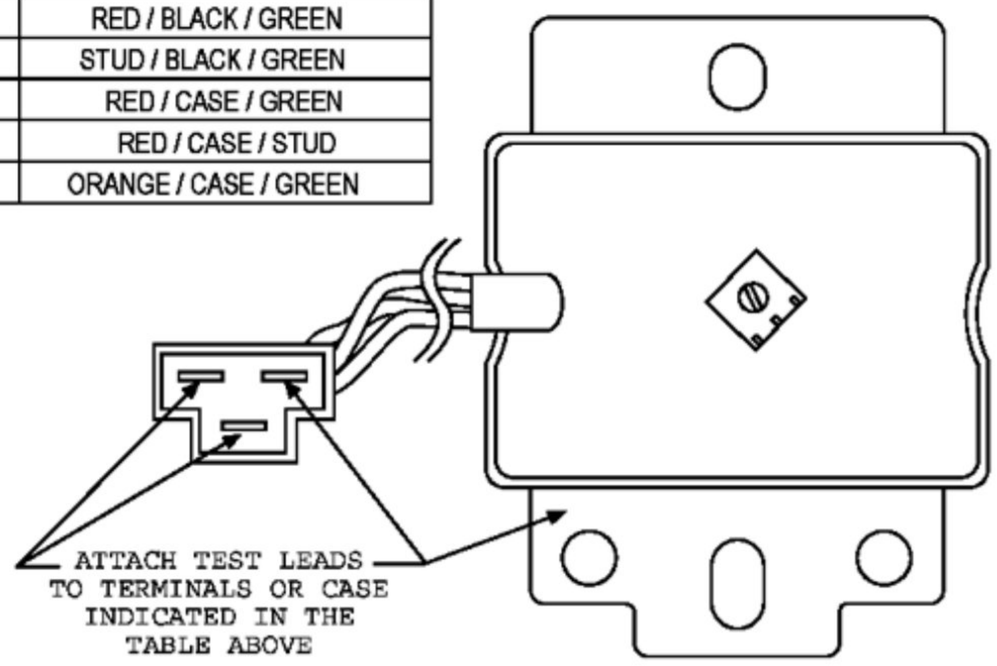

TRANSPO TESTER INSTRUCTIONS

for PRESTOLITE type regulators

PART NO.	FLD	VOLT	SET POINT	PART NO.	FLD	VOLT	SET POINT
P8-368	**B**	**12**	**15.0**	**P8-393**	**B**	**24**	**27.5**
P8-368A	**B**	**12**	**15.0**	**P8-393A**	**B**	**24**	**27.5**
P8-405	**B**	**12**	**14.2**				
P8-405A	**B**	**12**	**14.2**				

1. POWER OFF: Set "Voltage Range" and "FLD" switches to desired setting. Connect the voltage regulator as indicated in the diagram below.

2. POWER ON: Field lamp should blink and meter will indicate approximately the set point voltage indicated in the above table.

3. ADDITIONAL TEST:

Part #	VSH #	Tester Conn. POS / NEG / FLD
P8-328/A	6201A	RED / CASE / GREEN
P8-379/A	6201AB	BROWN / BLACK / GREEN
P8-407/A	6201ACY	ORANGE / BLACK / GREEN
P8-406/A	6201ADY	BROWN / BLACK / GREEN
P8-403/A	6201AE	RED / CASE / STUD
P8-404/A	6201AFY	PURPLE / BLACK / YELLOW
P8-410/A	6201AGY	PURPL E / BLACK / YELLOW
P8-343/A	6201D	RED / CASE / GREEN
P8-354/A	6201G	RED / BLACK / GREEN
P8-355/A	6201H	ORANGE / BLACK / GREEN
P8-357/A	6201K	RED / BLACK / GREEN
P8-352/A	6201N	STUD / BLACK / GREEN
P8-368/A	6201W	RED / CASE / GREEN
P8-405/A	6201JY	RED / CASE / STUD
P8-393/A	6401	ORANGE / CASE / GREEN

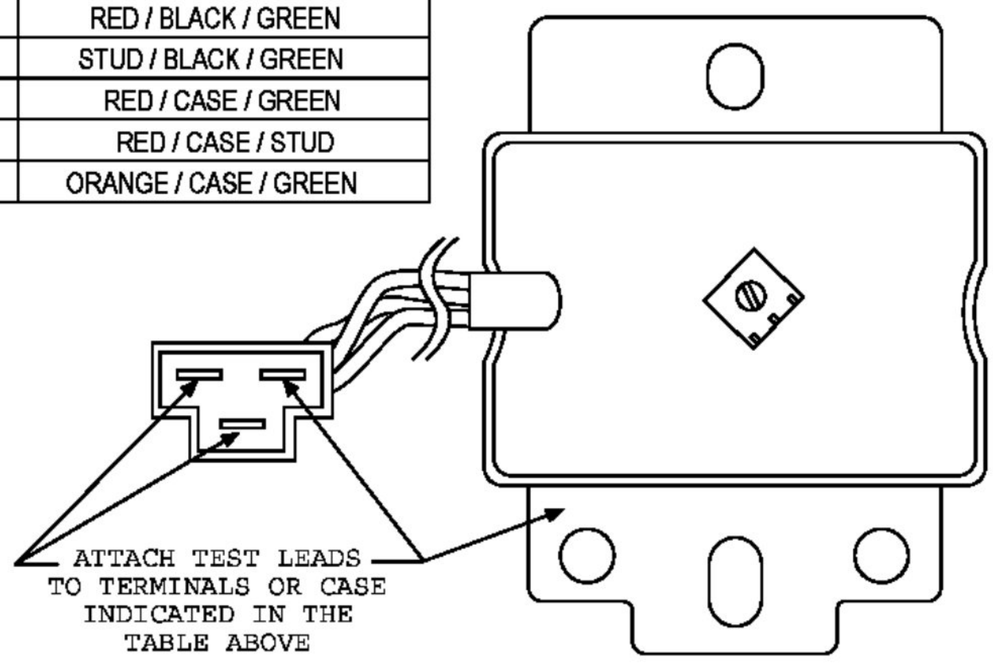

TRANSPO TESTER INSTRUCTIONS

for SEV MARCHAL type regulators

PART NO.	FLD	VOLT	SET POINT	PART NO.	FLD	VOLT	SET POINT
IS219	**B**	**12**	**14.2**				
IS219A	**B**	**12**	**14.2**				
IS219-30	**B**	**12**	**14.2**				

1. POWER OFF: Set "Voltage Range" and "FLD" switches to desired setting. Connect the voltage regulator as indicated in the diagram below.

2. POWER ON: Field lamp should blink and meter will indicate approximately the set point voltage indicated in the above table.

3. ADDITIONAL TEST:

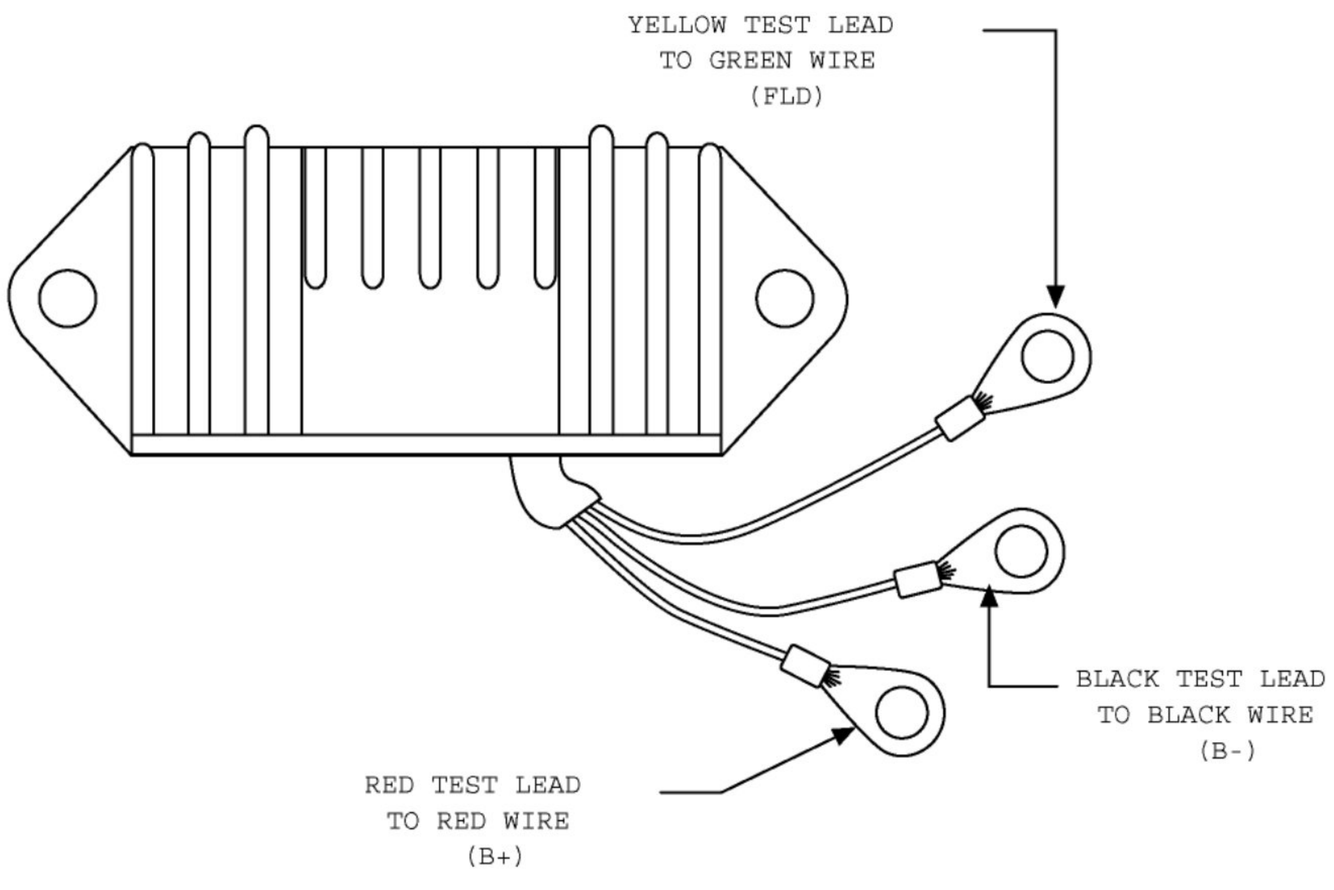

TRANSPO TESTER INSTRUCTIONS

for SEV MARCHAL type regulators

PART NO.	FLD	VOLT	SET POINT	PART NO.	FLD	VOLT	SET POINT
IS222	**B**	**12**	**14.3**				

1. POWER OFF: Set "Voltage Range" and "FLD" switches to desired setting. Connect the voltage regulator as indicated in the diagram below.

2. POWER ON: Field lamp should blink and meter will indicate approximately the set point voltage indicated in the above table.

3. ADDITIONAL TEST:

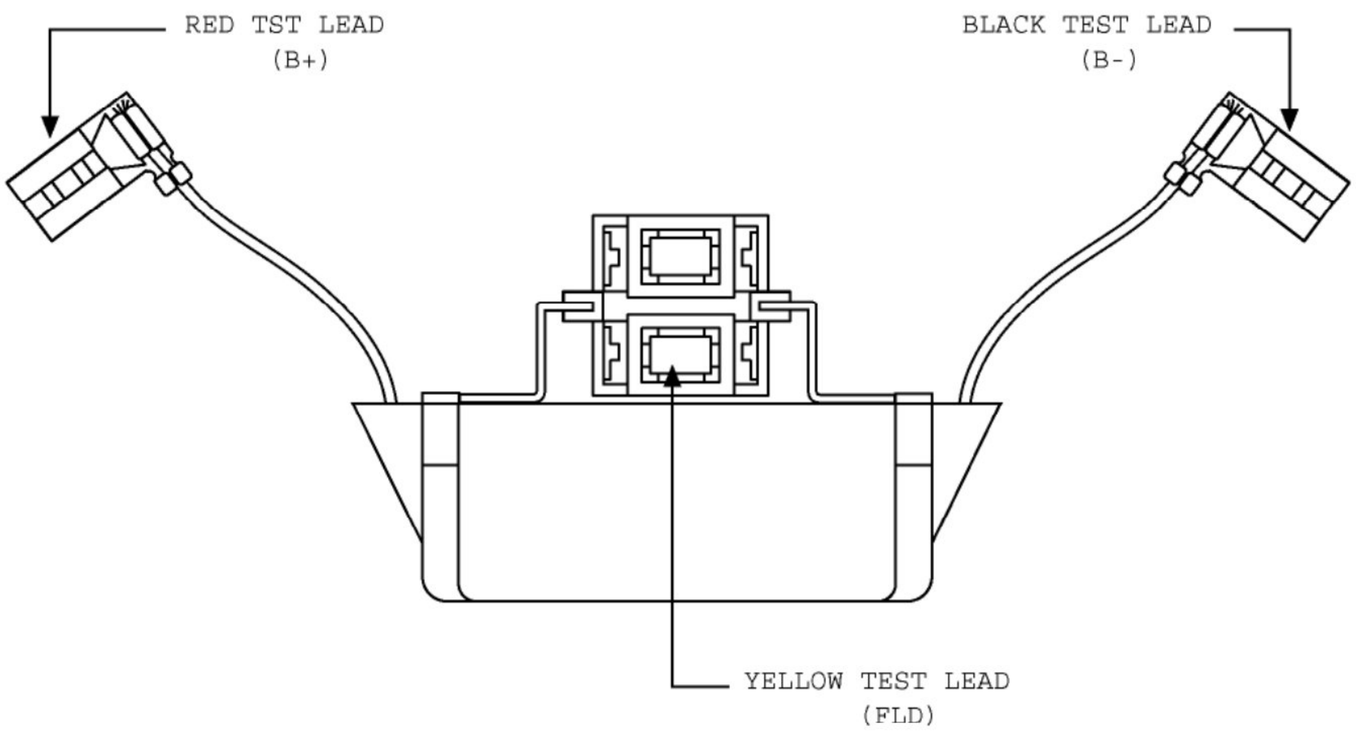

TRANSPO TESTER INSTRUCTIONS

for SEV MARCHAL type regulators

PART NO.	FLD	VOLT	SET POINT	PART NO.	FLD	VOLT	SET POINT
IS301	**B**	**12**	**14.2**				

1. POWER OFF: Set "Voltage Range" and "FLD" switches to desired setting. Connect the voltage regulator as indicated in the diagram below.

2. POWER ON: Field lamp should blink and meter will indicate approximately the set point voltage indicated in the above table.

3. ADDITIONAL TEST:

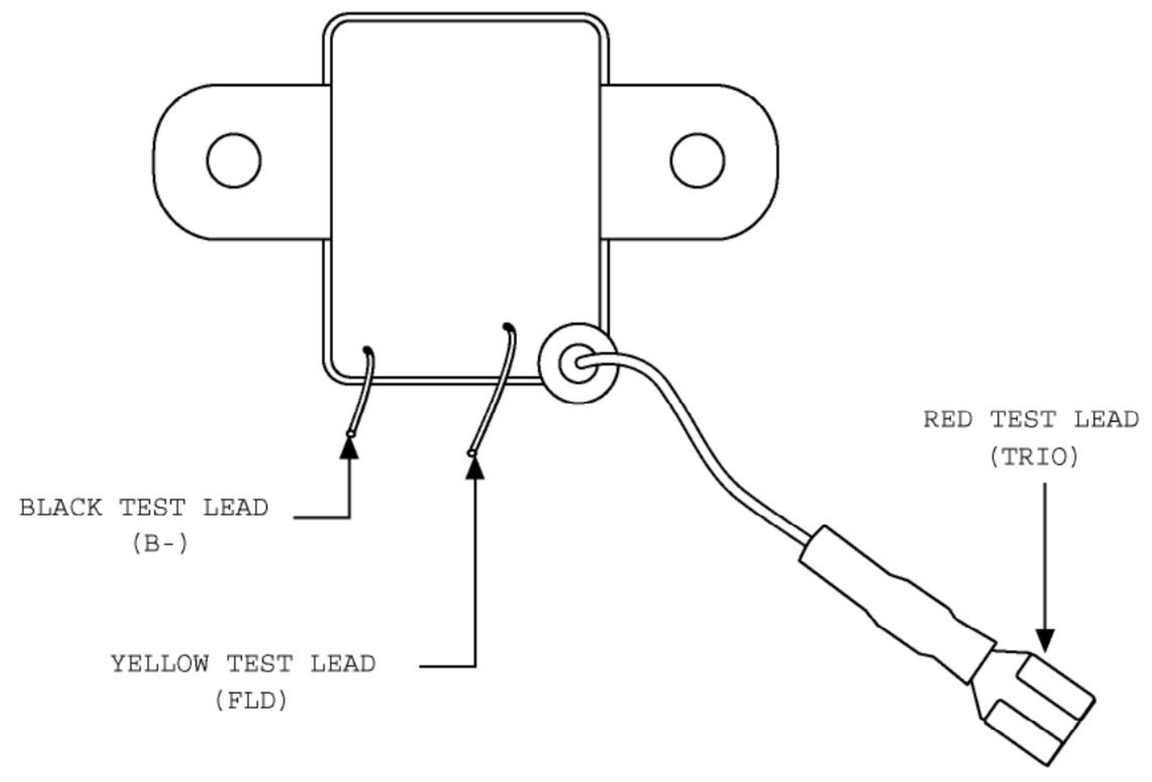

TRANSPO TESTER INSTRUCTIONS

for SEV MARCHAL type regulators

PART NO.	FLD	VOLT	SET POINT	PART NO.	FLD	VOLT	SET POINT
IS223	**B**	**12**	**14.4**				

1. POWER OFF: Set "Voltage Range" and "FLD" switches to desired setting. Connect the voltage regulator as indicated in the diagram below.

2. POWER ON: Field lamp should blink and meter will indicate approximately the set point voltage indicated in the above table.

3. ADDITIONAL TEST:

TRANSPO TESTER INSTRUCTIONS

for SPECIALTY type regulators

PART NO.	FLD	VOLT	SET POINT	PART NO.	FLD	VOLT	SET POINT
GC100	**A**	**12**	**14.45**				

1. POWER OFF: Set "Voltage Range" and "FLD" switches to desired setting. Connect the voltage regulator as indicated in the diagram below.

2. POWER ON: Field lamp should blink and meter will indicate approximately the set point voltage indicated in the above table.

3. ADDITIONAL TEST:

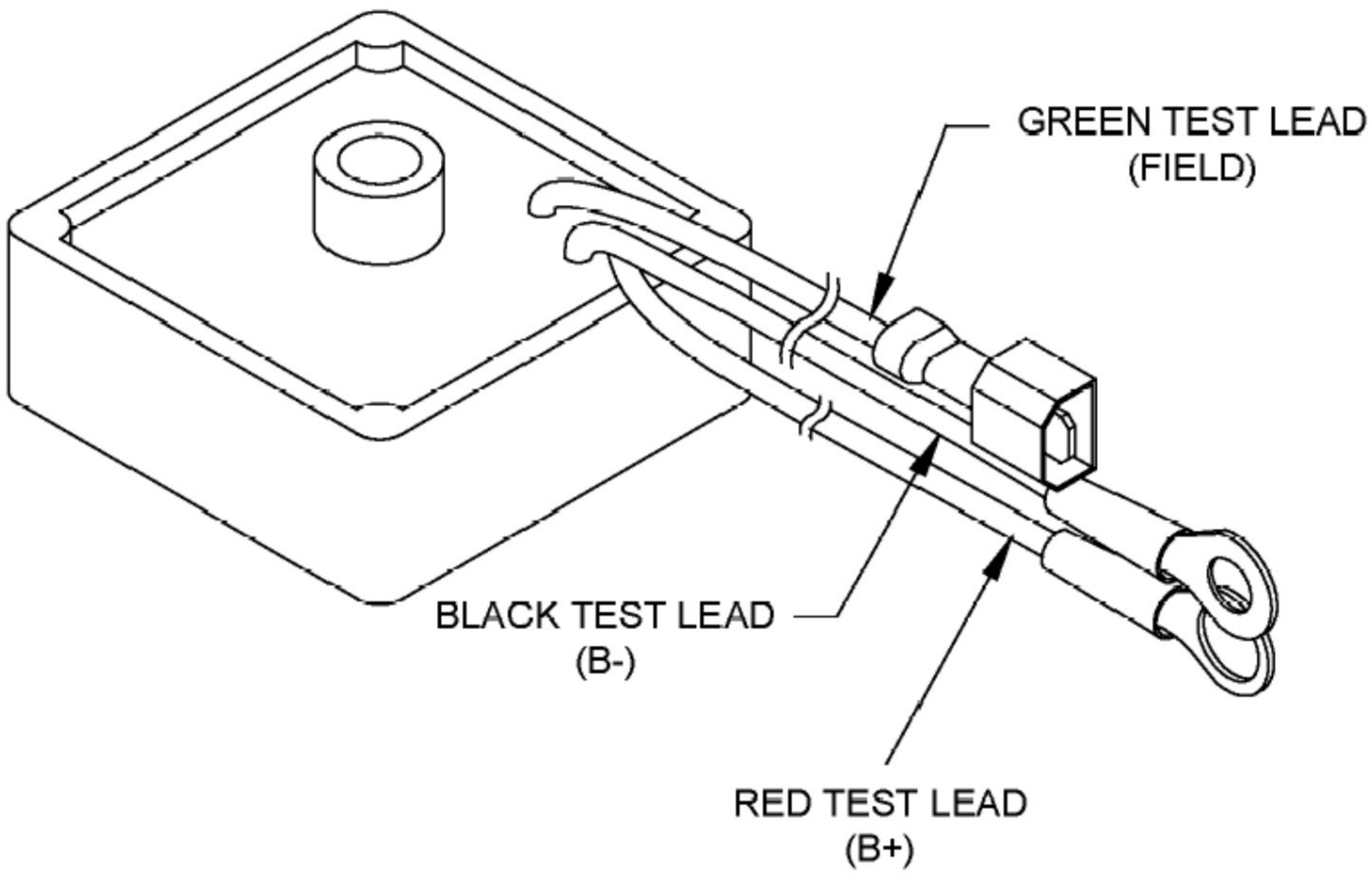

TRANSPO TESTER INSTRUCTIONS

for TE 911 SERIES type regulators

PART NO.	FLD	VOLT	SET POINT	PART NO.	FLD	VOLT	SET POINT
911-01	**A**	**12**	**14.2**	**911-21**	**A**	**32**	**37.5**
911-02	**B**	**12**	**14.2**	**911-22**	**B**	**32**	**37.5**
911-11	**A**	**24**	**27.5**				
911-12	**B**	**24**	**27.5**				

1. POWER OFF: Set "Voltage Range" and "FLD" switches to desired setting. Connect the voltage regulator as indicated in the diagram below.

2. POWER ON: Field lamp should blink and meter will indicate approximately the set point voltage indicated in the above table.

3. ADDITIONAL TEST:

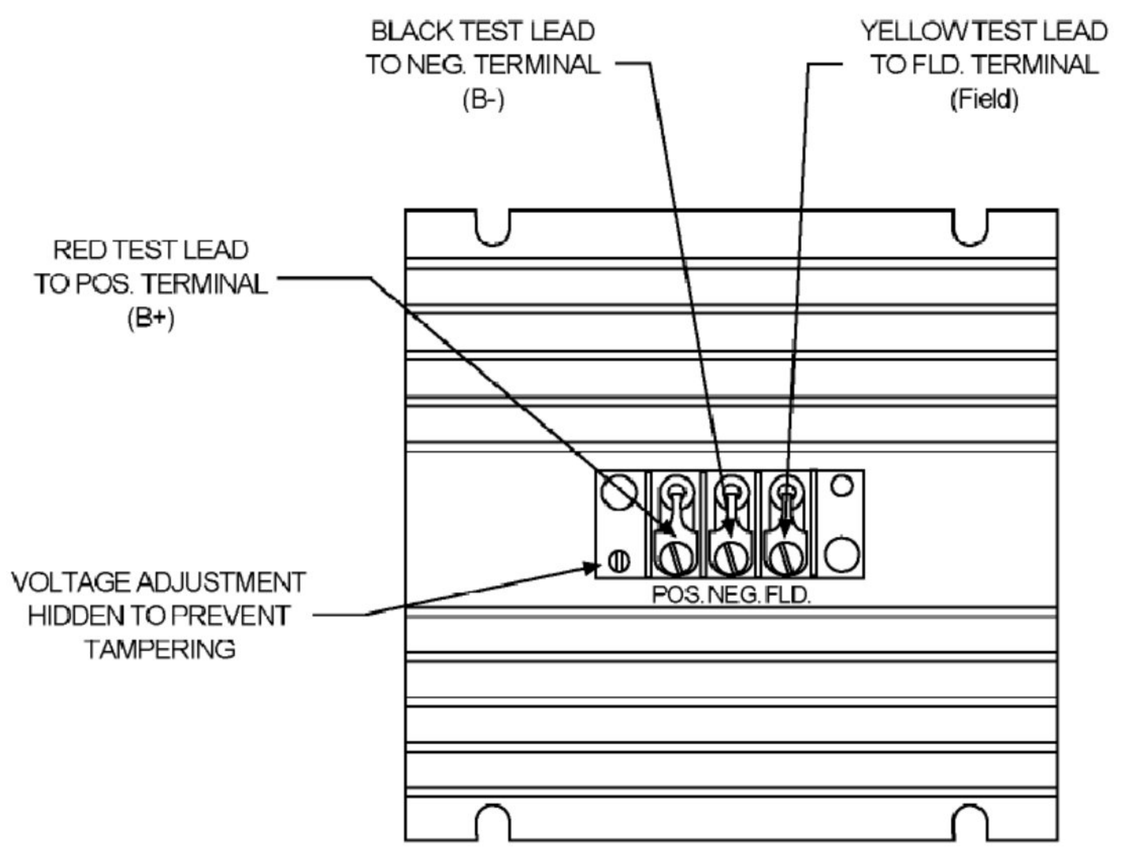

TRANSPO TESTER INSTRUCTIONS

for TE 911 SERIES type regulators

PART NO.	FLD	VOLT	SET POINT	PART NO.	FLD	VOLT	SET POINT
911-03	**A**	**12**	**14.2**	**911-23**	**A**	**32**	**37.5**
911-04	**B**	**12**	**14.2**	**911-24**	**B**	**32**	**37.5**
911-13	**A**	**24**	**27.5**				
911-14	**B**	**24**	**27.5**				

1. POWER OFF: Set "Voltage Range" and "FLD" switches to desired setting. Connect the voltage regulator as indicated in the diagram below.

2. POWER ON: Field lamp should blink and meter will indicate approximately the set point voltage indicated in the above table.

3. ADDITIONAL TEST: Remove white test lead from terminal marked "STA". File lamp should turn off and the meter will indicate low voltage.

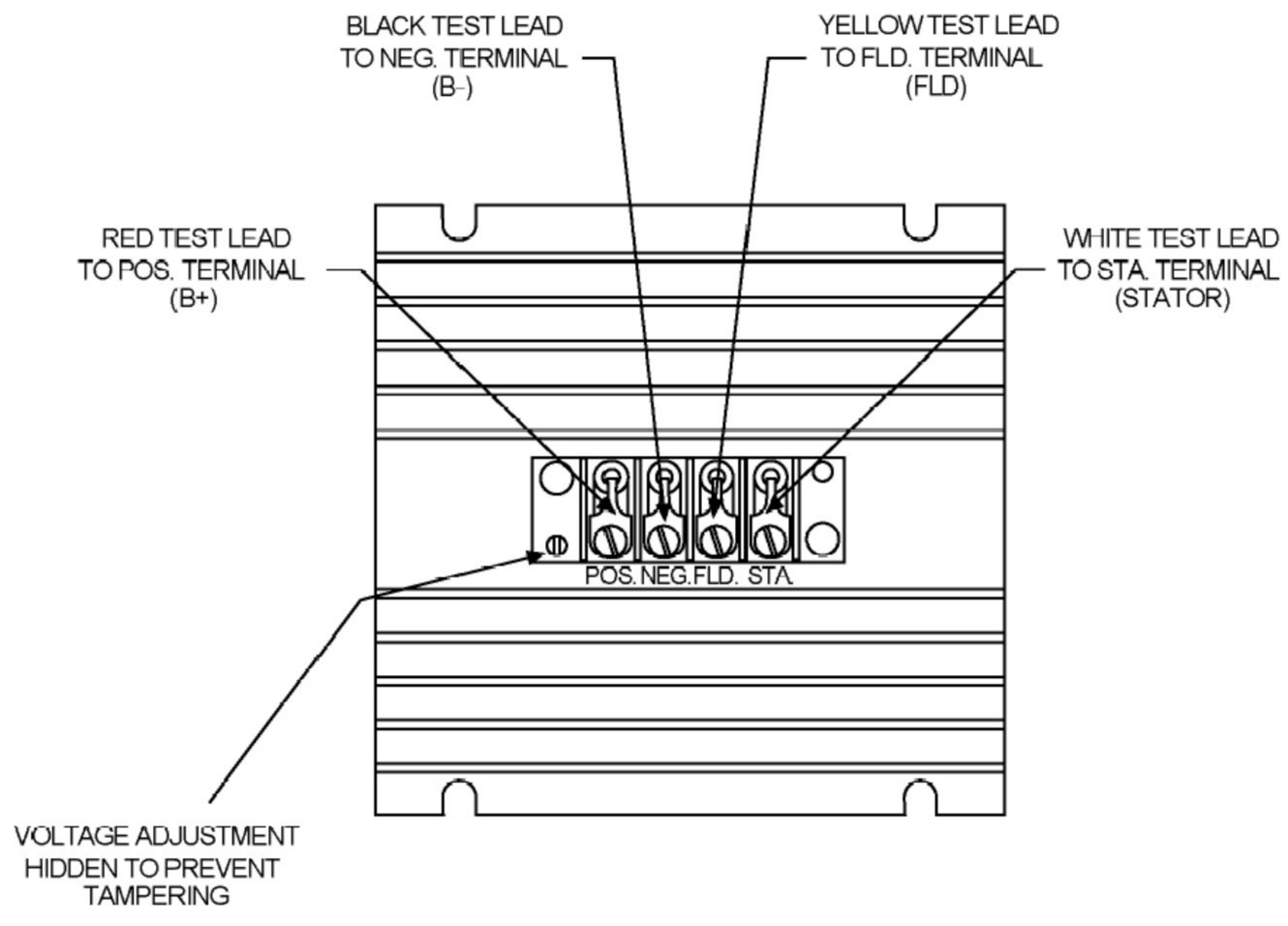

TRANSPO TESTER INSTRUCTIONS

for TE REPAIR CIRCUIT type regulators

PART NO.	FLD	VOLT	SET POINT	PART NO.	FLD	VOLT	SET POINT
TRI100	**A**	**12**	**14.6**				
TRI110	**A**	**12**	**14.6**				

1. POWER OFF: Set "Voltage Range" and "FLD" switches to desired setting. Connect the voltage regulator as indicated in the diagram below.

2. POWER ON: Field lamp should blink and meter will indicate approximately the set point voltage indicated in the above table.

3. ADDITIONAL TEST:

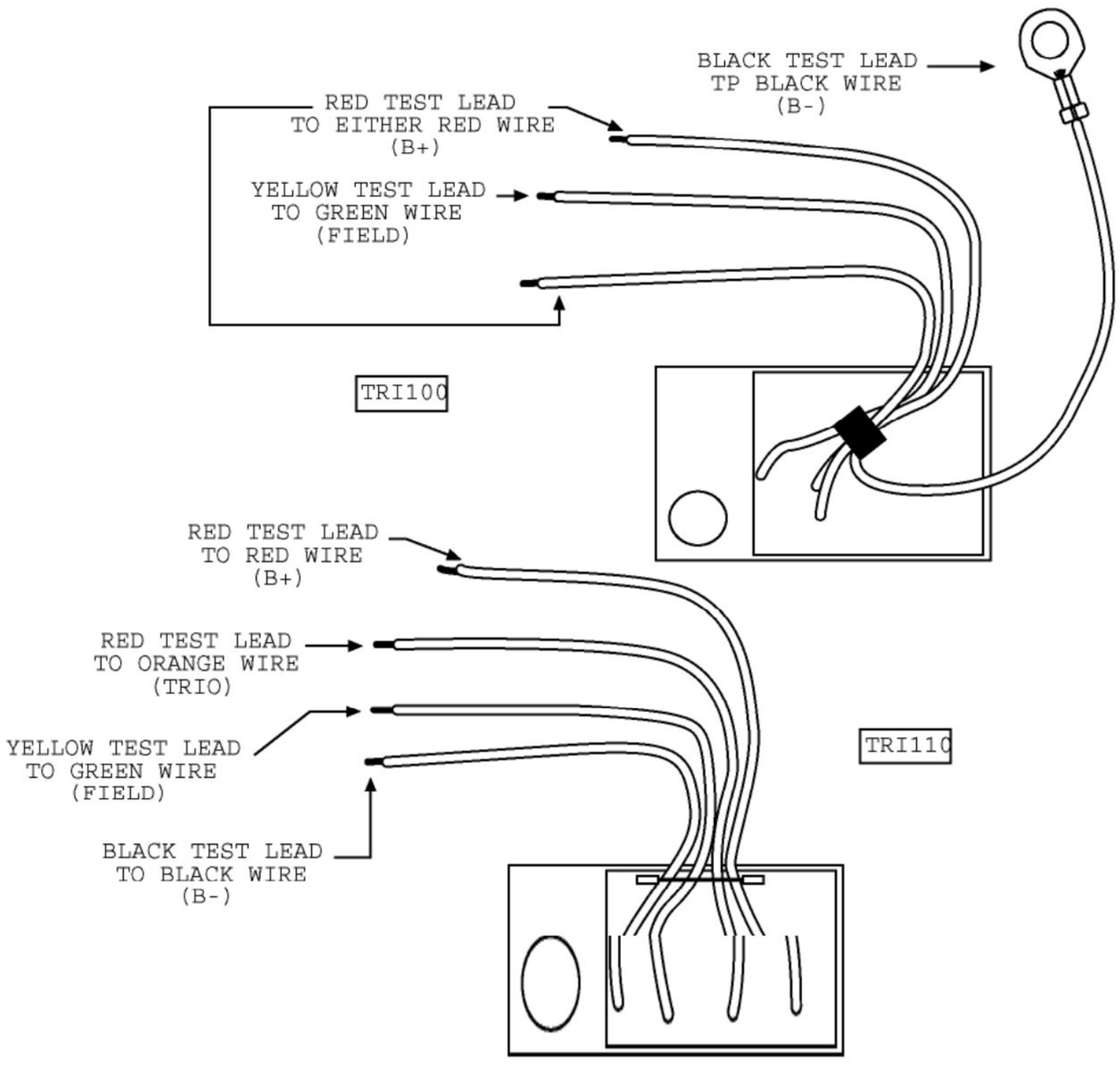

TRANSPO TESTER INSTRUCTIONS

for TE REPAIR CIRCUIT type regulators

PART NO.	FLD	VOLT	SET POINT	PART NO.	FLD	VOLT	SET POINT
TRI300E	**A**	**12**	**14.2**	**TRI406**	**A**	**12**	**14.4**
TRI400S	**A**	**12**	**14.5**	**TRI410**	**A**	**12**	**14.6**
TRI400R	**A**	**12**	**14.5**	**TRI420**	**A**	**12**	**14.6**
TRI405	**A**	**12**	**14.4**	**TRI421**	**A**	**12**	**14.6**

1. POWER OFF: Set "Voltage Range" and "FLD" switches to desired setting. Connect the voltage regulator as indicated in the diagram below.

2. POWER ON: Field lamp should blink and meter will indicate approximately the set point voltage indicated in the above table.

3. ADDITIONAL TEST: TESTER CONNECTION CHART

B-RED TEST RED (B+)
S-RED TEST LEAD (SENSE)
R-RED TEST LEAD (IG)
T-RES TEST LEAD (TRIO)
F-YELLOW TEST LEAD (FLD)
L-RED TEST LEAD (INDICATOR LIGHT)
E-BLACK TEST LEAD (GROUND)

NOTE: Regulators shown with circuit up (Epoxy side)
NOTE: After repair circuit installation, refer to complete regulator assembly procedure.

REFER TO PRODUCT GROUP TRI-04, PAGE 376-A, FOR REGULATOR'S DIAGRAM

TRANSPO TESTER INSTRUCTIONS

for TE REPAIR CIRCUIT type regulators

PART NO.	FLD	VOLT	SET POINT	PART NO.	FLD	VOLT	SET POINT
TRI422	**A**	**12**	**14.6**				
TRI430	**A**	**12**	**14.6**				

1. POWER OFF: Set "Voltage Range" and "FLD" switches to desired setting. Connect the voltage regulator as indicated in the diagram below.

2. POWER ON: Field lamp should blink and meter will indicate approximately the set point voltage indicated in the above table.

3. ADDITIONAL TEST: TESTER CONNECTION CHART

B-RED TEST RED (B+)
S-RED TEST LEAD (SENSE)
R-RED TEST LEAD (IG)
T-RED TEST LEAD (TRIO)
F-YELLOW TEST LEAD (FLD)
L-RED TEST LEAD (INDICATOR LIGHT)
E-BLACK TEST LEAD (GROUND)

NOTE: Regulators shown with circuit up (Epoxy side)
NOTE: After repair circuit installation, refer to complete regulator assembly procedure.

REFER TO PRODUCT GROUP TRI-04, PAGE 376-A, FOR REGULATOR'S DIAGRAM

TRANSPO TESTER INSTRUCTIONS

for TE REPAIR CIRCUIT type regulators

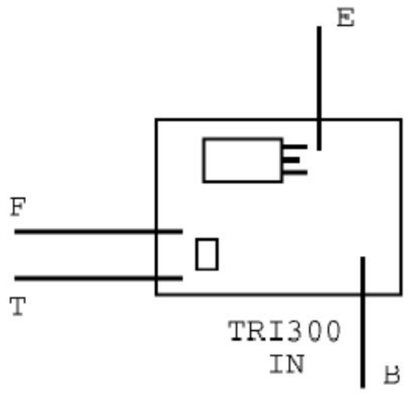

TRI300
IN B

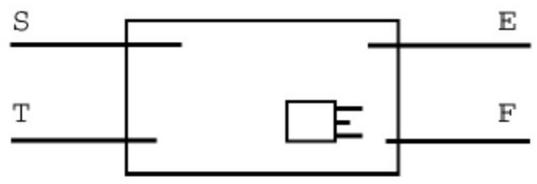

TRI400S
IM

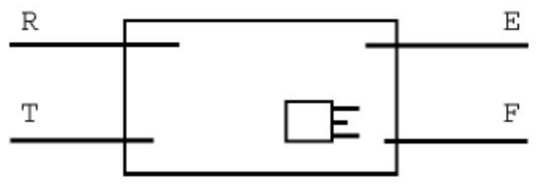

TRI400R
IM

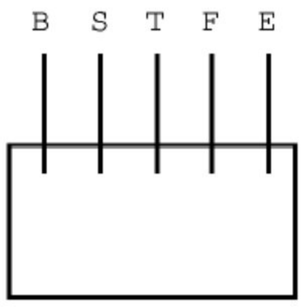

TRI410
IH

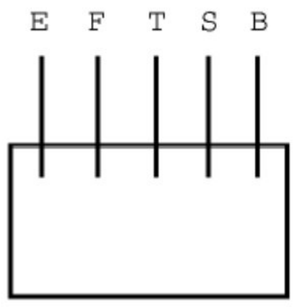

TRI420
IH

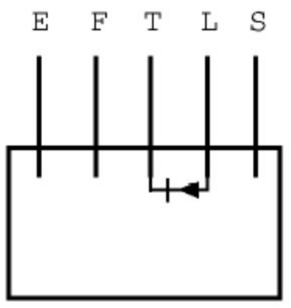

TRI421
⊥H

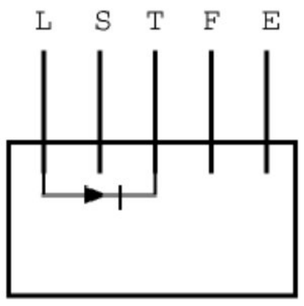

TRI422
⊥H

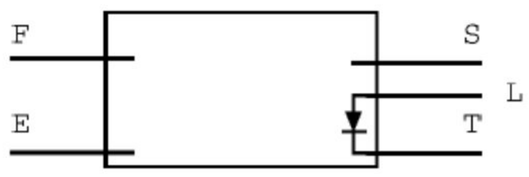

TRI405
⊥H

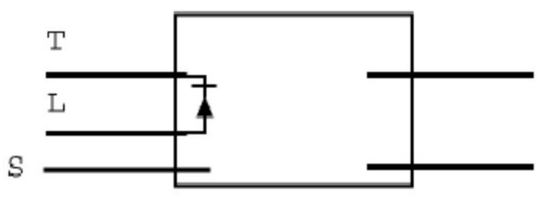

TRI406
⊥M

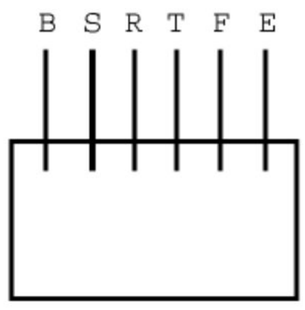

TRI430
IM

Product Group TRI-04 Revision: 06-02-05 Date : 6/8/2005

TRANSPO TESTER INSTRUCTIONS

for TE REPAIR CIRCUIT type regulators

PART NO.	FLD	VOLT	SET POINT	PART NO.	FLD	VOLT	SET POINT
TRI219	**A**	**12**	**14.5**	**TRI224**	**A**	**12**	**14.5**
TRI220	**A**	**12**	**14.5**	**TRI225**	**A**	**12**	**14.5**
TRI221	**A**	**12**	**14.5**	**TRI226**	**A**	**12**	**14.5**
TRI222	**A**	**12**	**14.5**	**TRI227**	**A**	**12**	**14.5**

1. POWER OFF: Set "Voltage Range" and "FLD" switches to desired setting. Connect the voltage regulator as indicated in the diagram below.

2. POWER ON: Field lamp should blink and meter will indicate approximately the set point voltage indicated in the above table.

3. ADDITIONAL TEST: **Using VRC1000**: To check for over Voltage, push the "Over Voltage" switch and the "Lamp Indicator" will turn on between 16.0V and 17.1V. Push the choke drive and the "Choke Drive Indicator Lamp" will turn on, if present.

NOTE: Regulators shown with circuit up (Epoxy side)
NOTE: After repair circuit installation, refer to complete regulator assembly procedure.

REFER TO PRODUCT GROUP TRI-07, PAGE 378-A, FOR REGULATOR'S DIAGRAM

TRANSPO TESTER INSTRUCTIONS

for TE REPAIR CIRCUIT type regulators

PART NO.	FLD	VOLT	SET POINT	PART NO.	FLD	VOLT	SET POINT
TRI250	**A**	**12**	**14.5**	**TRI254**	**A**	**12**	**14.5**
TRI251	**A**	**12**	**14.5**	**TRI255**	**A**	**12**	**14.5**
TRI252	**A**	**12**	**14.5**				
TRI253	**A**	**12**	**14.5**				

1. POWER OFF: Set "Voltage Range" and "FLD" switches to desired setting. Connect the voltage regulator as indicated in the diagram below.

2. POWER ON: Field lamp should blink and meter will indicate approximately the set point voltage indicated in the above table.

3. ADDITIONAL TEST: **Using VRC1000**: To check for over Voltage, push the "Over Voltage" switch and the "Lamp Indicator" will turn on between 16.0V and 17.1V. Push the choke drive and the "Choke Drive Indicator Lamp" will turn on, if present.

NOTE: Regulators shown with circuit up (Epoxy side)
NOTE: After repair circuit installation, refer to complete regulator assembly procedure.

REFER TO PRODUCT GROUP TRI-07, PAGE 378-A, FOR REGULATOR'S DIAGRAM

TRANSPO TESTER INSTRUCTIONS

for TE REPAIR CIRCUIT type regulators

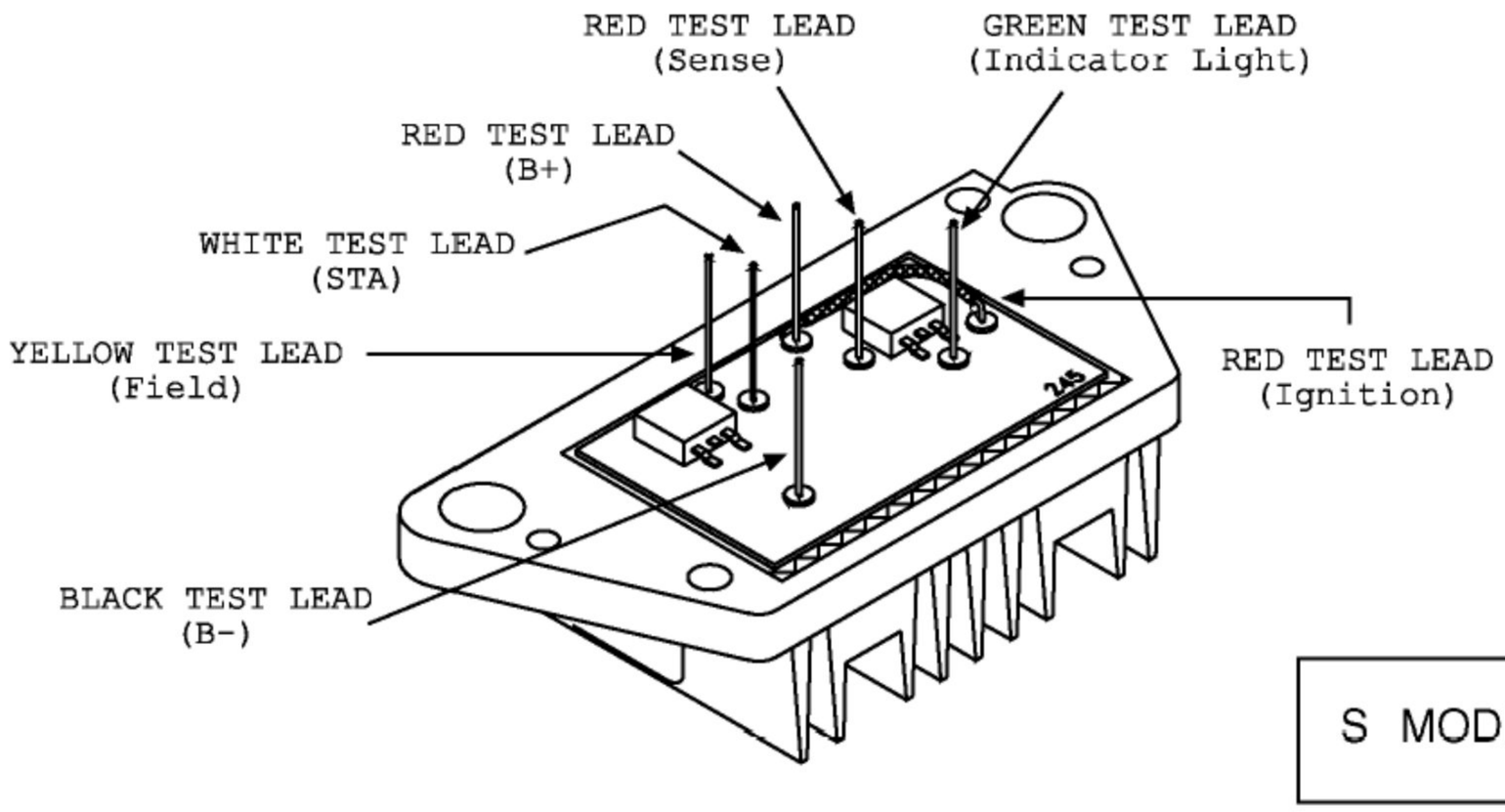

S MODEL TYPE

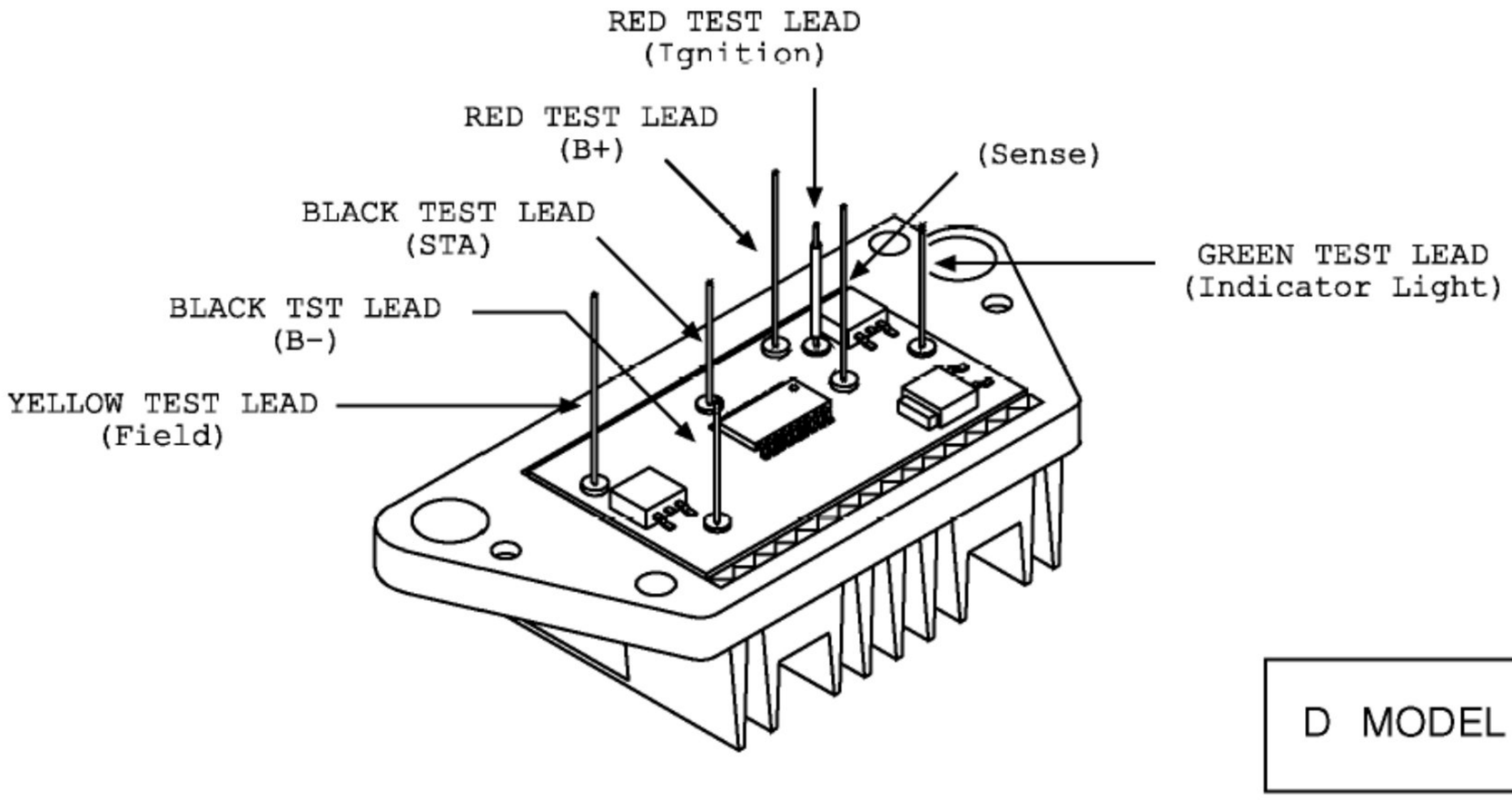

D MODEL TYPE

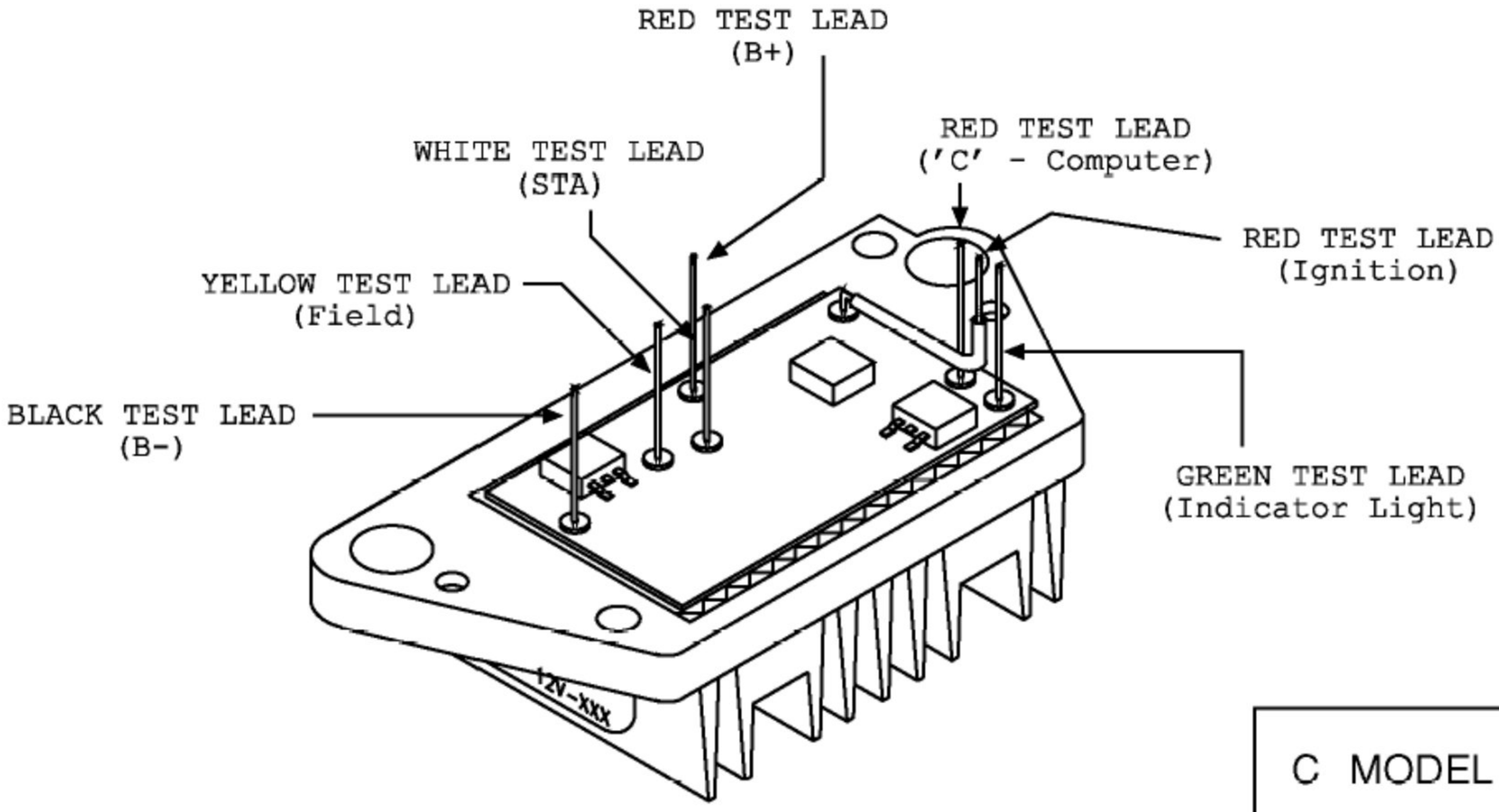

C MODEL TYPE

Product Group TRI-07 Revision: 4/26/05 Date : 6/8/2005

TRANSPO TESTER INSTRUCTIONS

for TE REPAIR CIRCUIT type regulators

PART NO.	FLD	VOLT	SET POINT	PART NO.	FLD	VOLT	SET POINT
TRI10DN	**B**	**12**	**14.2**				

1. POWER OFF: Set "Voltage Range" and "FLD" switches to desired setting. Connect the voltage regulator as indicated in the diagram below.

2. POWER ON: Field lamp should blink and meter will indicate approximately the set point voltage indicated in the above table.

3. ADDITIONAL TEST: Remove white test lead from regulator's connection marked "STA". Field lamp should turn off and the meter will indicate 12V.

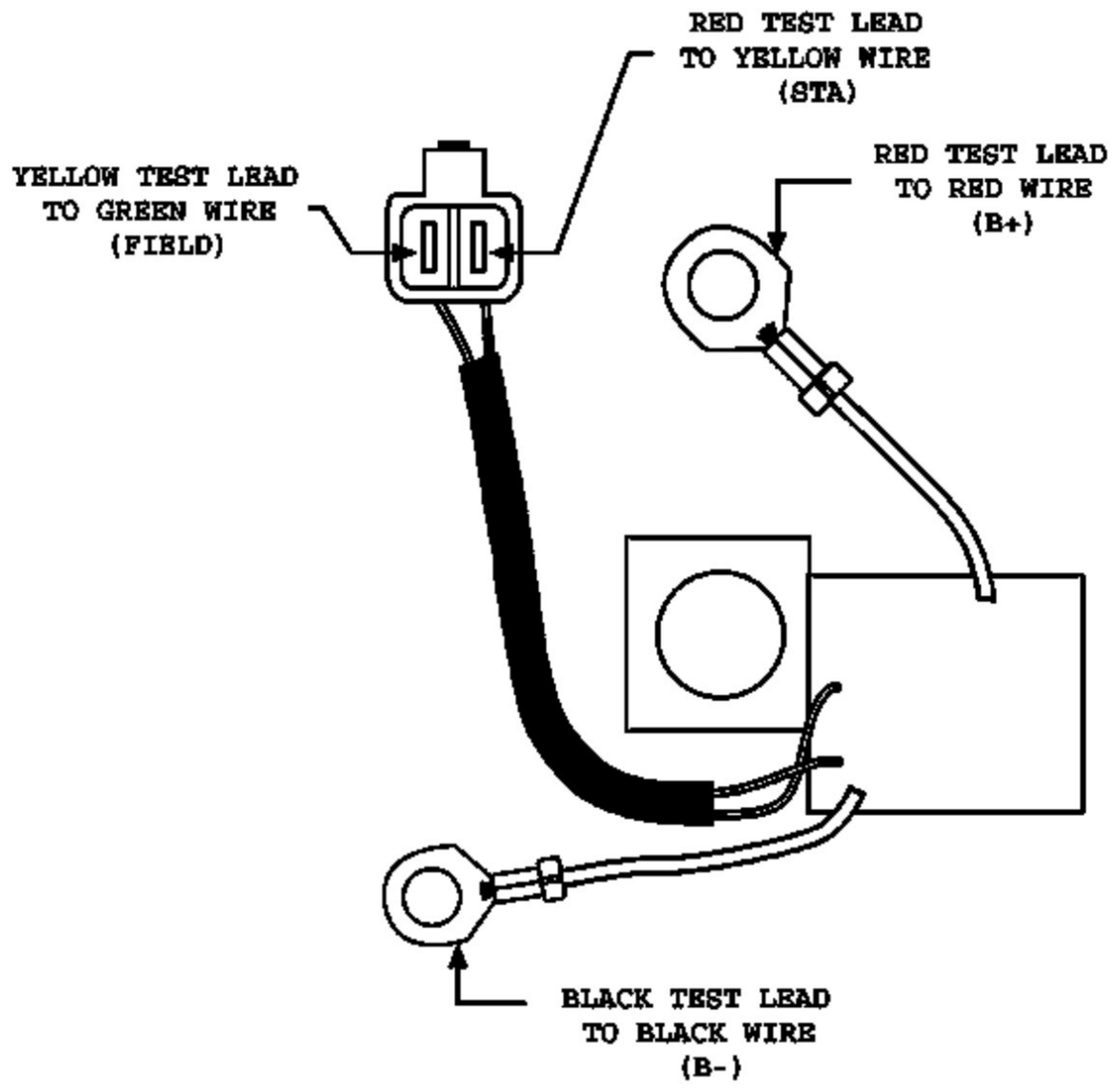

TRANSPO TESTER INSTRUCTIONS

for TE REPAIR CIRCUIT type regulators

PART NO.	FLD	VOLT	SET POINT	PART NO.	FLD	VOLT	SET POINT
TRI268	**A**	**12**	**14.5**				
TRI270	**A**	**12**	**14.5**				

1. POWER OFF: Set "Voltage Range" and "FLD" switches to desired setting. Connect the voltage regulator as indicated in the diagram below.

2. POWER ON: Field lamp should blink and meter will indicate approximately the set point voltage indicated in the above table.

3. ADDITIONAL TEST: TESTER CONNECTION CHART NOTE: This instruction does not apply to TRI270
B-RED TEST RED (B+)
I-GREEN TEST LEAD (I.L.)
T-RED TEST LEAD (TRIO)
E-BLACK TEST LEAD (B-)
F-YELLOW TEST LEAD (FLD)
A-RED TEST LEAD (SENSE)
Remove the red test lead from the wire marked "sense". The field light will still blink, the meter will indicate from 15v to 16v and the indicator lamp will remain on.

NOTE: Instruction #3 Does not apply to TRI270

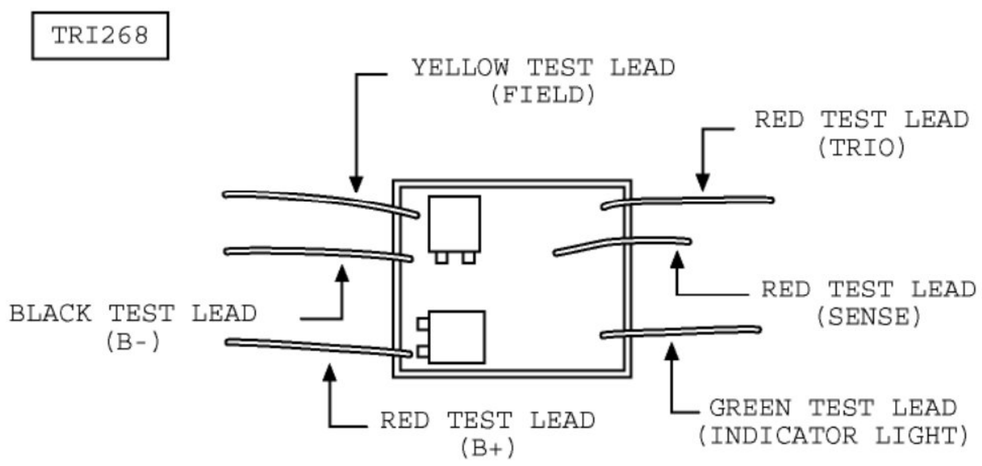

**** Note: Instruction #3 Does not apply to TRI270***

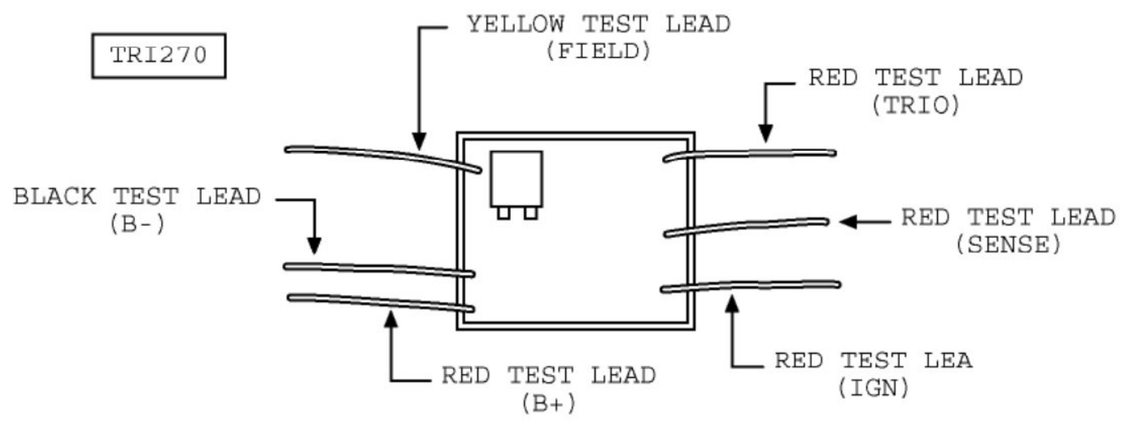

TRANSPO TESTER INSTRUCTIONS

for TE REPAIR CIRCUIT type regulators

PART NO.	FLD	VOLT	SET POINT	PART NO.	FLD	VOLT	SET POINT
TRI247	**A**	**12**	**14.5**				

1. POWER OFF: Set "Voltage Range" and "FLD" switches to desired setting. Connect the voltage regulator as indicated in the diagram below.

2. POWER ON: Field lamp should blink and meter will indicate approximately the set point voltage indicated in the above table.

3. ADDITIONAL TEST: Remove white test lead from wire marked "STA". Indicator light should turn on, field lamp will remain on and the meter will indicate 12V. Remove red test lead from wire marked "IG". Field lamp should turn off.

Using VRC1000: To check for over Voltage, push the "Over Voltage" switch and the "Lamp Indicator" will turn on between 16.0V and 17.1V.

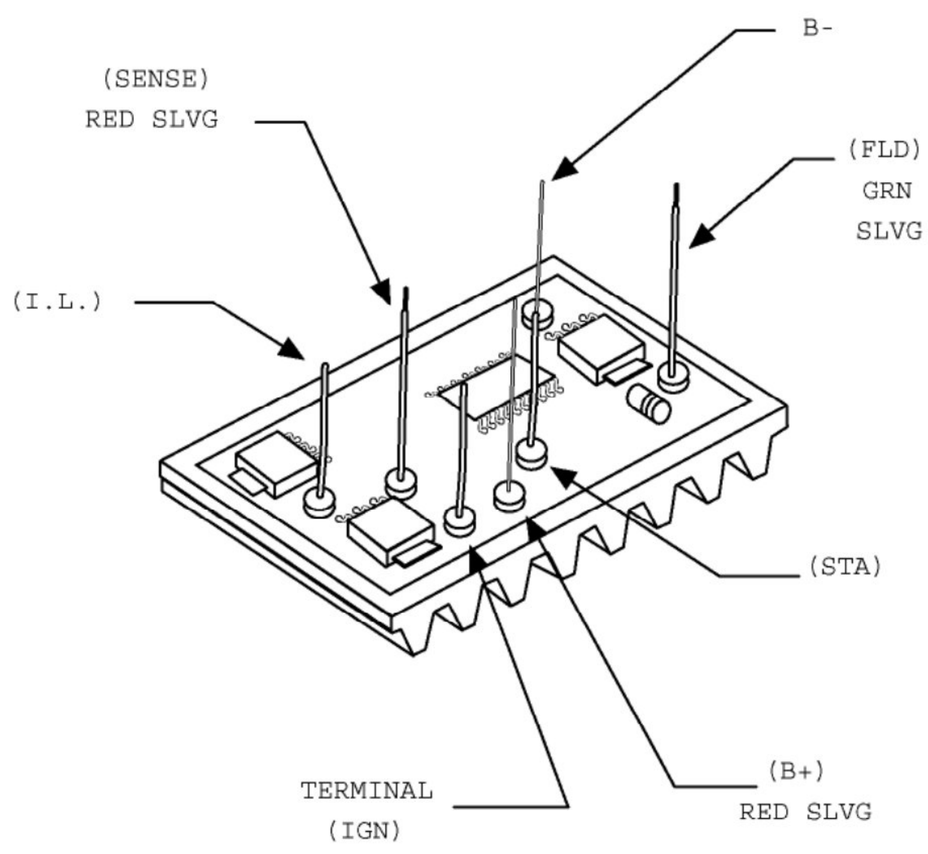

TRANSPO TESTER INSTRUCTIONS

for TE REPAIR CIRCUIT type regulators

PART NO.	FLD	VOLT	SET POINT	PART NO.	FLD	VOLT	SET POINT
TRI248	**A**	**12**	**14.5**				

1. POWER OFF: Set "Voltage Range" and "FLD" switches to desired setting. Connect the voltage regulator as indicated in the diagram below.

2. POWER ON: Field lamp should blink and meter will indicate approximately the set point voltage indicated in the above table.

3. ADDITIONAL TEST:

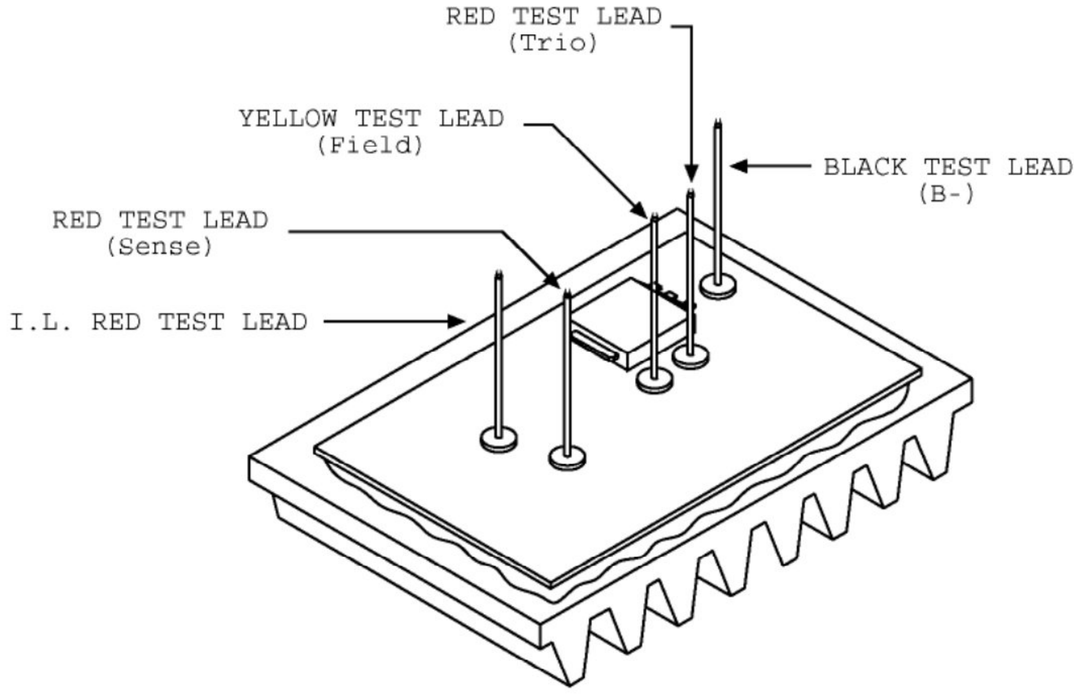

TRANSPO TESTER INSTRUCTIONS

for TE REPAIR CIRCUIT type regulators

PART NO.	FLD	VOLT	SET POINT	PART NO.	FLD	VOLT	SET POINT
TRI275	**A**	**12**	**14.5**				
TRI285	**A**	**12**	**14.5**				

1. POWER OFF: Set "Voltage Range" and "FLD" switches to desired setting. Connect the voltage regulator as indicated in the diagram below.

2. POWER ON: Field lamp should blink and meter will indicate approximately the set point voltage indicated in the above table.

3. ADDITIONAL TEST:

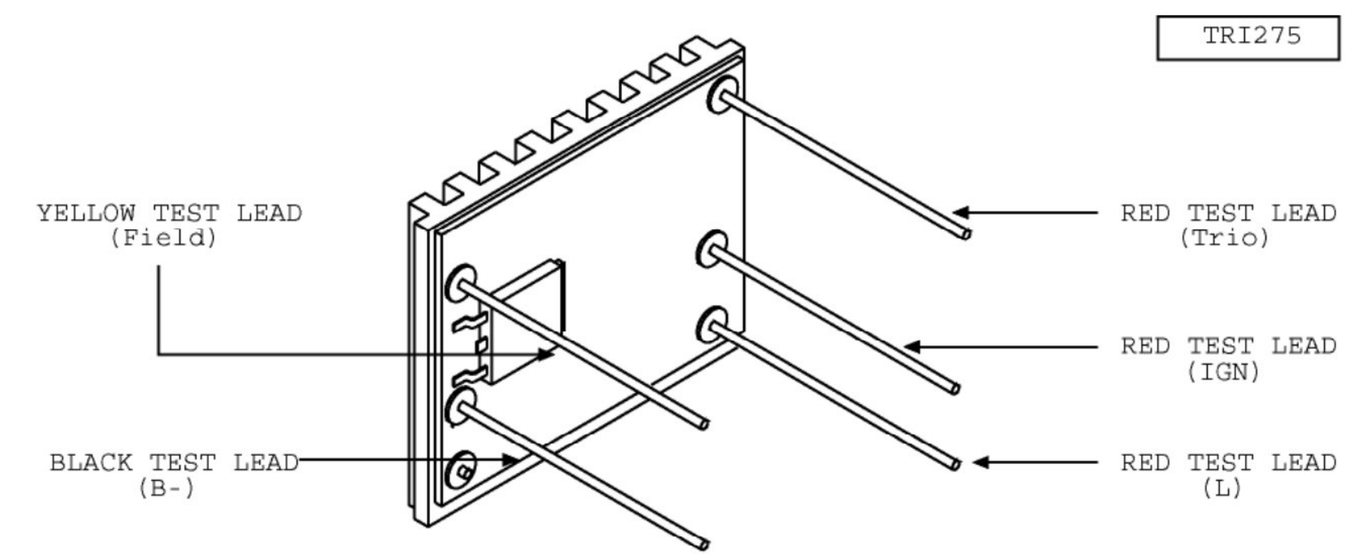

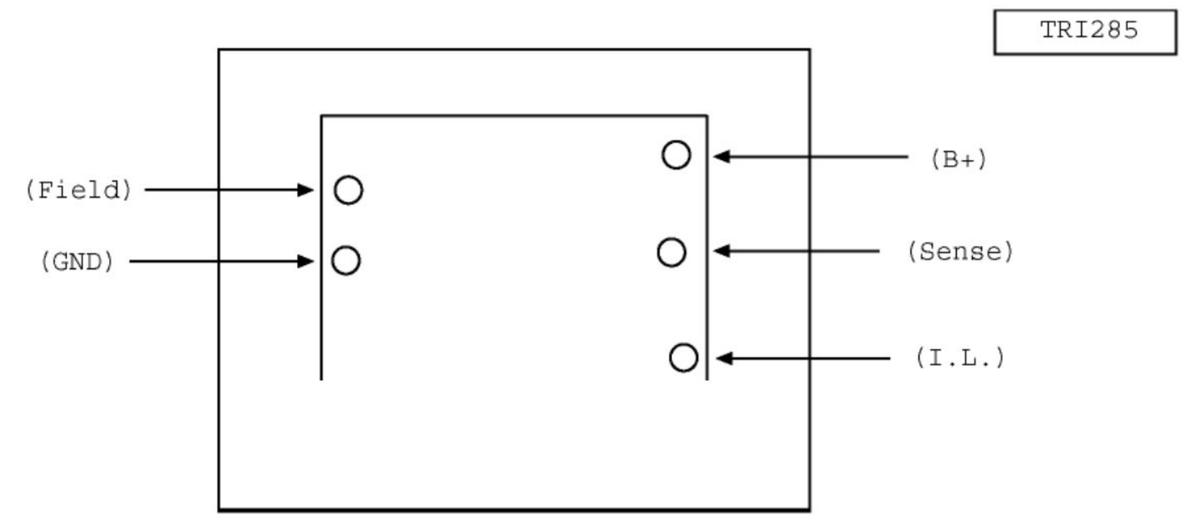

TRANSPO TESTER INSTRUCTIONS

for TE REPAIR CIRCUIT type regulators

PART NO.	FLD	VOLT	SET POINT	PART NO.	FLD	VOLT	SET POINT
TRI278	**A**	**12**	**14.4**				

1. POWER OFF: Set "Voltage Range" and "FLD" switches to desired setting. Connect the voltage regulator as indicated in the diagram below.

2. POWER ON: Field lamp should blink and meter will indicate approximately the set point voltage indicated in the above table.

3. ADDITIONAL TEST: Remove red test lead from the wire marked as "S". Field lamp should still blink and the meter will indicate approximately 15.5V.

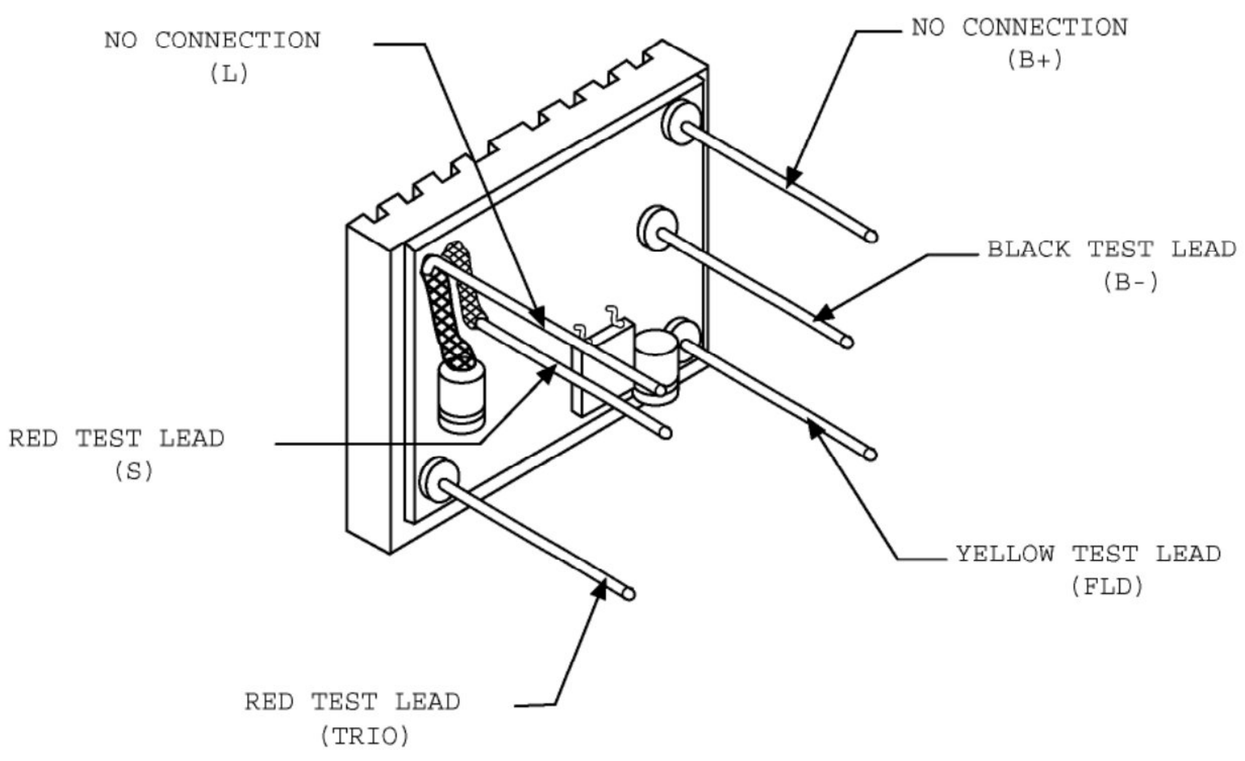

TRANSPO TESTER INSTRUCTIONS

for TE REPAIR CIRCUIT type regulators

PART NO.	FLD	VOLT	SET POINT	PART NO.	FLD	VOLT	SET POINT
TRI233	**A**	**24**	**27.5**				

1. POWER OFF: Set "Voltage Range" and "FLD" switches to desired setting. Connect the voltage regulator as indicated in the diagram below.

2. POWER ON: Field lamp should blink and meter will indicate approximately the set point voltage indicated in the above table.

3. ADDITIONAL TEST:

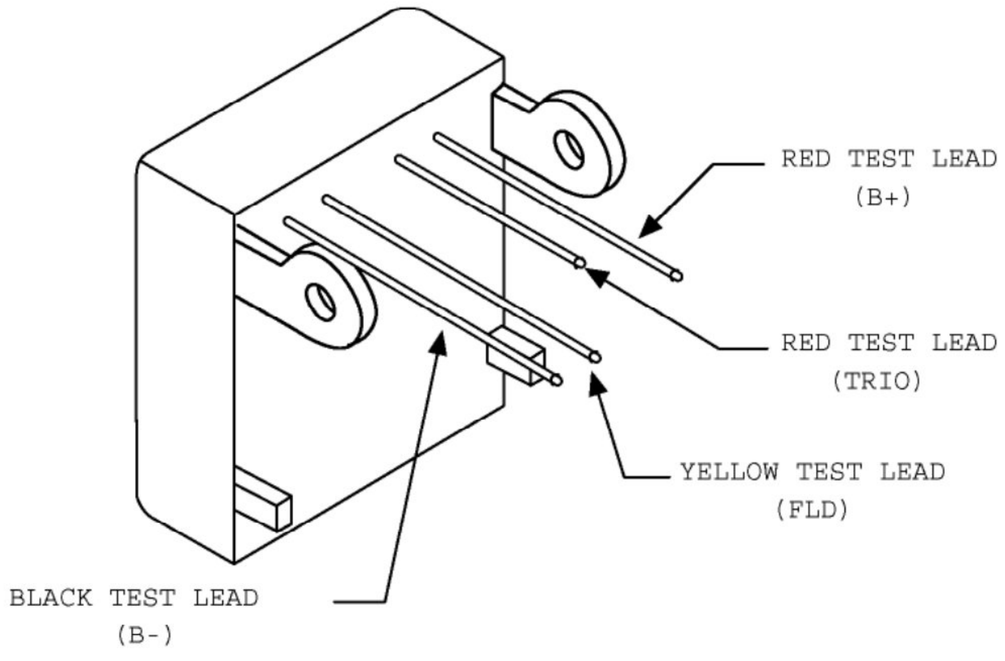

TRANSPO TESTER INSTRUCTIONS

for TE REPAIR CIRCUIT type regulators

PART NO.	FLD	VOLT	SET POINT	PART NO.	FLD	VOLT	SET POINT
TRI267	**A**	**12**	**14.5**				

1. POWER OFF: Set "Voltage Range" and "FLD" switches to desired setting. Connect the voltage regulator as indicated in the diagram below.

2. POWER ON: Field lamp should blink and meter will indicate approximately the set point voltage indicated in the above table.

3. ADDITIONAL TEST: Remove red test lead from the wire marked as "C" and connect a black test lead to the "C" terminal. Field lamp should still blink and the meter will indicate approximately 12.5v.

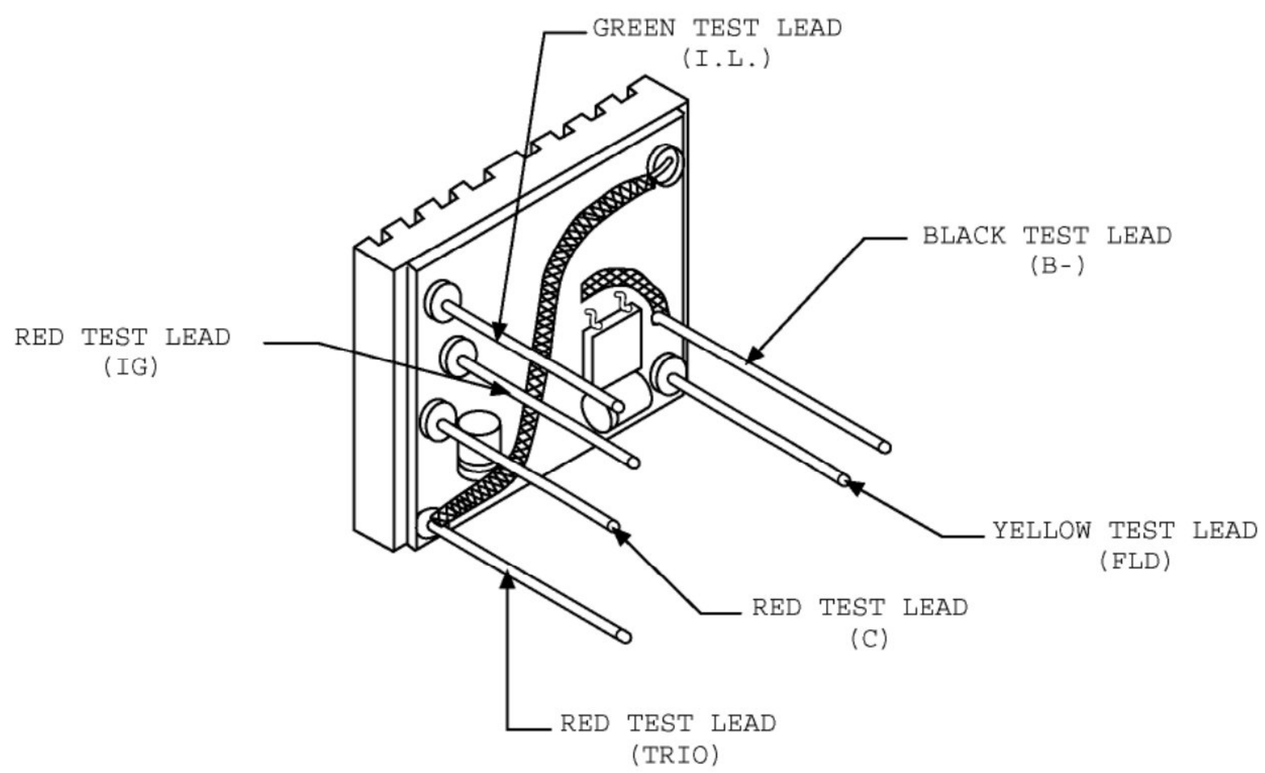

TRANSPO TESTER INSTRUCTIONS

for TE REPAIR CIRCUIT type regulators

PART NO.	FLD	VOLT	SET POINT	PART NO.	FLD	VOLT	SET POINT
TRI839	**A**	**12**	**14.4**				
TRI273	**A**	**12**	**14.4**				
TRI835	**A**	**12**	**14.4**				

1. POWER OFF: Set "Voltage Range" and "FLD" switches to desired setting. Connect the voltage regulator as indicated in the diagram below.

2. POWER ON: Field lamp should blink and meter will indicate approximately the set point voltage indicated in the above table.

3. ADDITIONAL TEST: 1. Remove red test lead from terminal marked "TRIO". Field lamp should still blink, the meter will indicate the set point voltage and the indicator light will turn on.
2. Reconnect red test to "TRIO". Connector a black test lead to terminal marked "C". Field lamp should still blink and the meter will indicate approximately 12.5v.

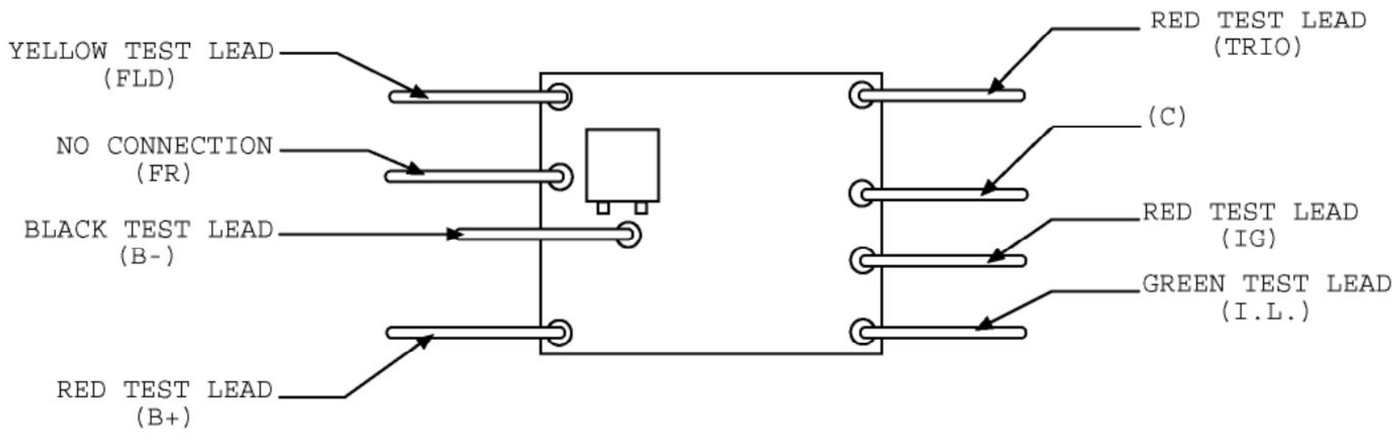

TRANSPO TESTER INSTRUCTIONS

for TE REPAIR CIRCUIT type regulators

PART NO.	FLD	VOLT	SET POINT	PART NO.	FLD	VOLT	SET POINT
TRI423	**A**	**12**	**14.6**				

1. POWER OFF: Set "Voltage Range" and "FLD" switches to desired setting. Connect the voltage regulator as indicated in the diagram below.

2. POWER ON: Field lamp should blink and meter will indicate approximately the set point voltage indicated in the above table.

3. ADDITIONAL TEST: Remove red test lead from terminal marked "TRIO". Field lamp should still blink and the meter will indicate approximately 15.5v.

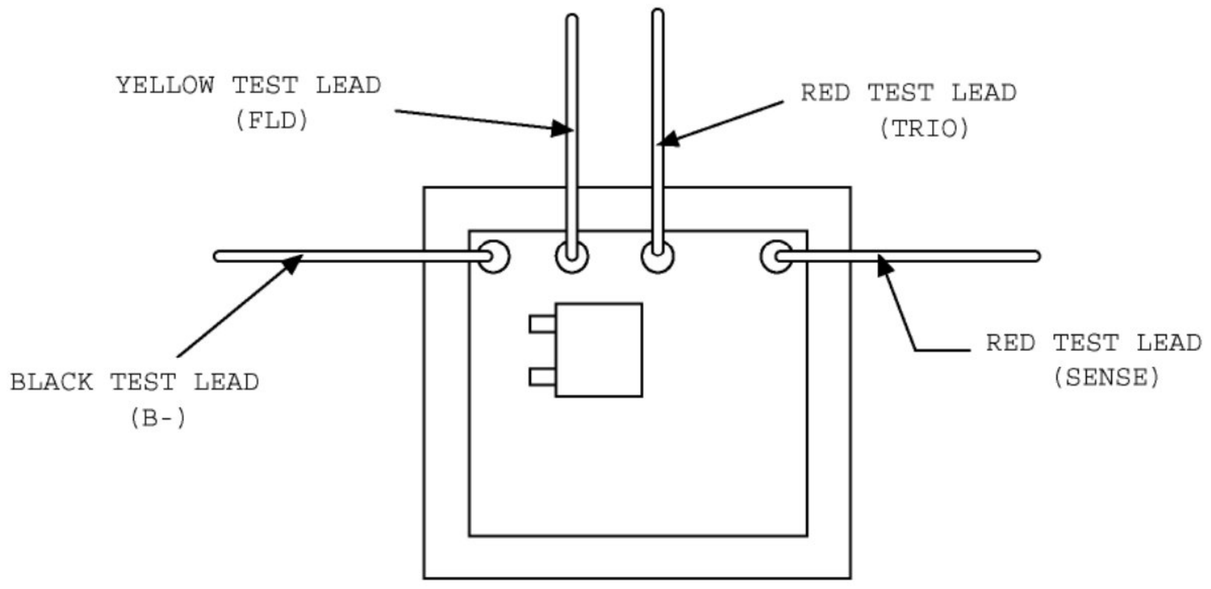

TRANSPO TESTER INSTRUCTIONS

for TE REPAIR CIRCUIT type regulators

PART NO.	FLD	VOLT	SET POINT	PART NO.	FLD	VOLT	SET POINT
TRI283	**A**	**12**	**14.4**				

1. POWER OFF: Set "Voltage Range" and "FLD" switches to desired setting. Connect the voltage regulator as indicated in the diagram below.

2. POWER ON: Field lamp should blink and meter will indicate approximately the set point voltage indicated in the above table.

3. ADDITIONAL TEST:

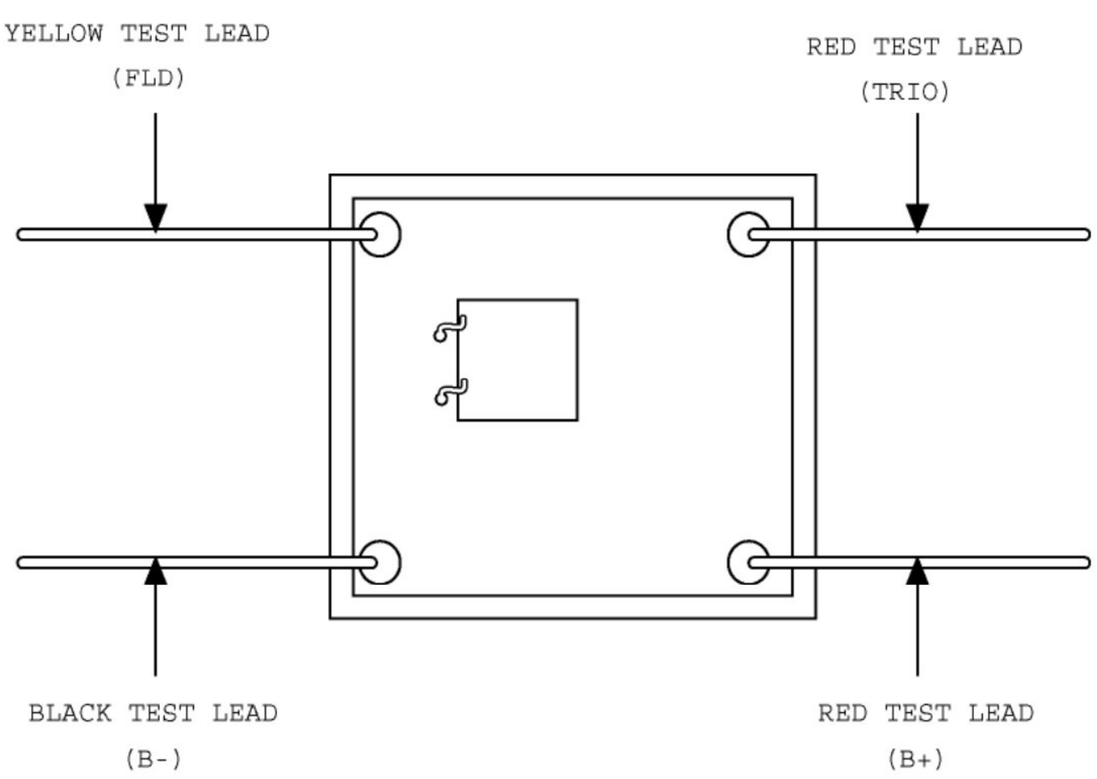

TRANSPO TESTER INSTRUCTIONS

for TE REPAIR CIRCUIT type regulators

PART NO.	FLD	VOLT	SET POINT	PART NO.	FLD	VOLT	SET POINT
TRI271	**A**	**12**	**14.5**				
TRI276	**A**	**12**	**14.4**				
TRI836	**A**	**12**	**14.4**				
TRI837	**A**	**12**	**14.4**				

1. POWER OFF: Set "Voltage Range" and "FLD" switches to desired setting. Connect the voltage regulator as indicated in the diagram below.

2. POWER ON: Field lamp should blink and meter will indicate approximately the set point voltage indicated in the above table.

3. ADDITIONAL TEST: Remove the red test lead from the wire marked as "SENSE". The field light will still blink the meter will indicate from 15V. to 16V, and the indicator lamp will remain on.
Using VRC1000: To check for over Voltage, push the "Over Voltage" switch and the "Lamp Indicator" will turn on between 16.0V and 17.1V.

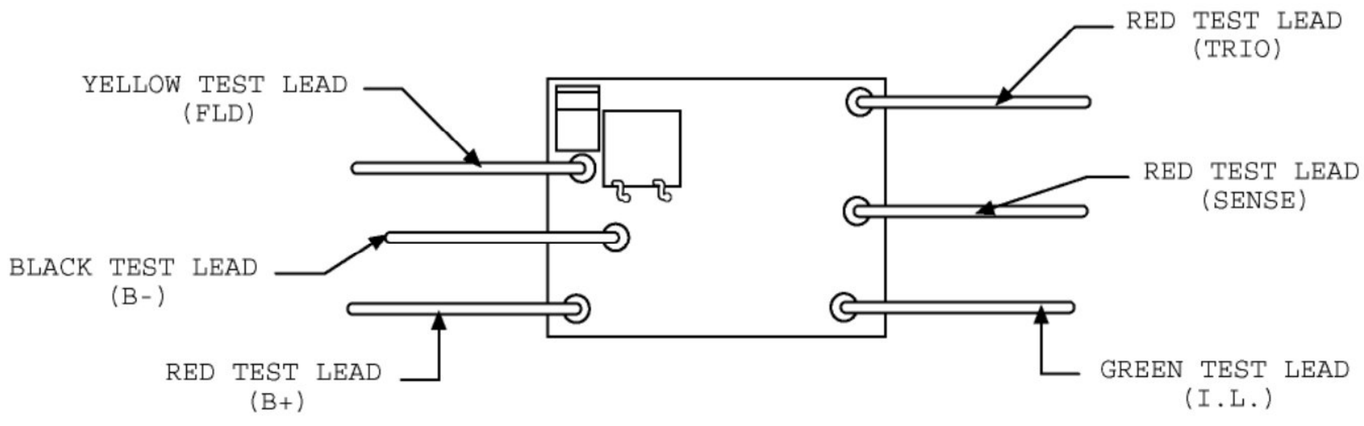

TRANSPO TESTER INSTRUCTIONS

for TE REPAIR CIRCUIT type regulators

PART NO.	FLD	VOLT	SET POINT	PART NO.	FLD	VOLT	SET POINT
TRI257	**A**	**12**	**14.5**				

1. POWER OFF: Set "Voltage Range" and "FLD" switches to desired setting. Connect the voltage regulator as indicated in the diagram below.

2. POWER ON: Field lamp should blink and meter will indicate approximately the set point voltage indicated in the above table.

3. ADDITIONAL TEST: Remove white lead from terminal marked "stator". The indicator light will turn on and the meter will indicate approximately 12 volts and the field lamp will remain fully on.

Using VRC1000: To check for over Voltage, push the "Over Voltage" switch and the "Lamp Indicator" will turn on between 16.0V and 17.1V. Push the choke drive and the "Choke Drive Indicator Lamp" will turn on, if present.

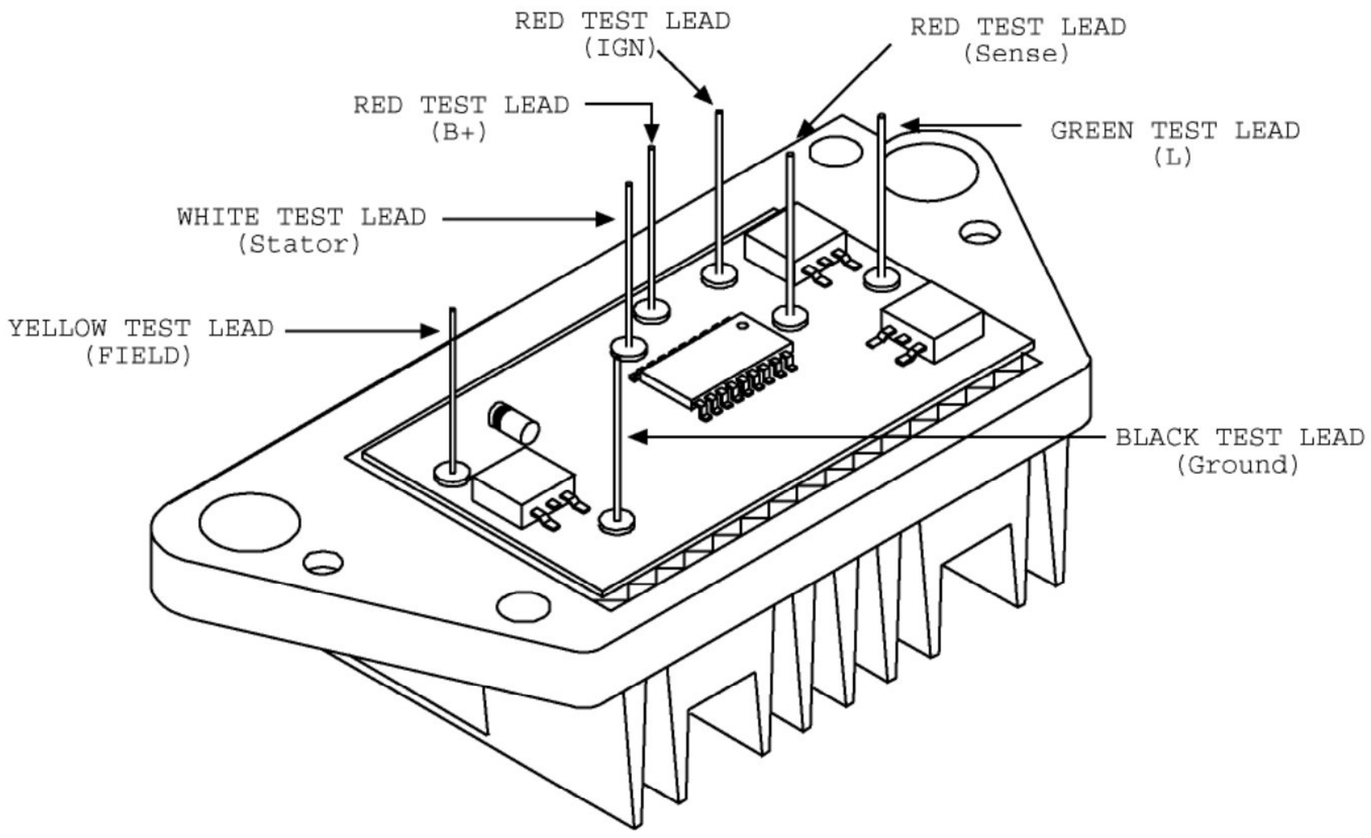

TRANSPO TESTER INSTRUCTIONS

for TE REPAIR CIRCUIT type regulators

PART NO.	FLD	VOLT	SET POINT	PART NO.	FLD	VOLT	SET POINT
TRI232	**A**	**12**	**14.3**				

1. POWER OFF: Set "Voltage Range" and "FLD" switches to desired setting. Connect the voltage regulator as indicated in the diagram below.

2. POWER ON: Field lamp should blink and meter will indicate approximately the set point voltage indicated in the above table.

3. ADDITIONAL TEST:

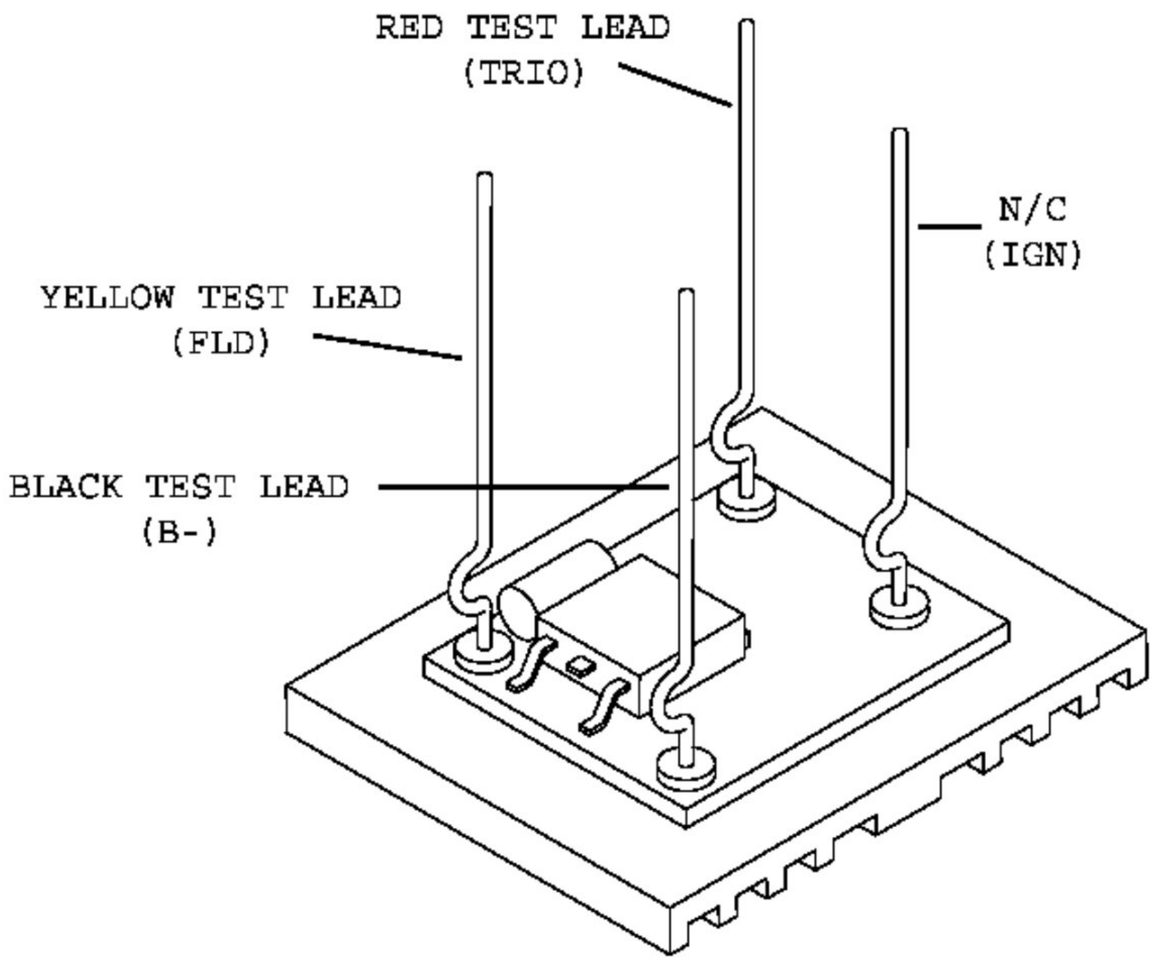

TRANSPO TESTER INSTRUCTIONS

for TE REPAIR CIRCUIT type regulators

PART NO.	FLD	VOLT	SET POINT	PART NO.	FLD	VOLT	SET POINT
TRI845	**A**	**12**	**14.4**				

1. POWER OFF: Set "Voltage Range" and "FLD" switches to desired setting. Connect the voltage regulator as indicated in the diagram below.

2. POWER ON: Field lamp should blink and meter will indicate approximately the set point voltage indicated in the above table.

3. ADDITIONAL TEST: Connect Computer (C) to Black (B-), voltage will read 12.5 volts
Remove Sense (Red), Lamp light will turn on.

* Connect only for Computer (C) function test

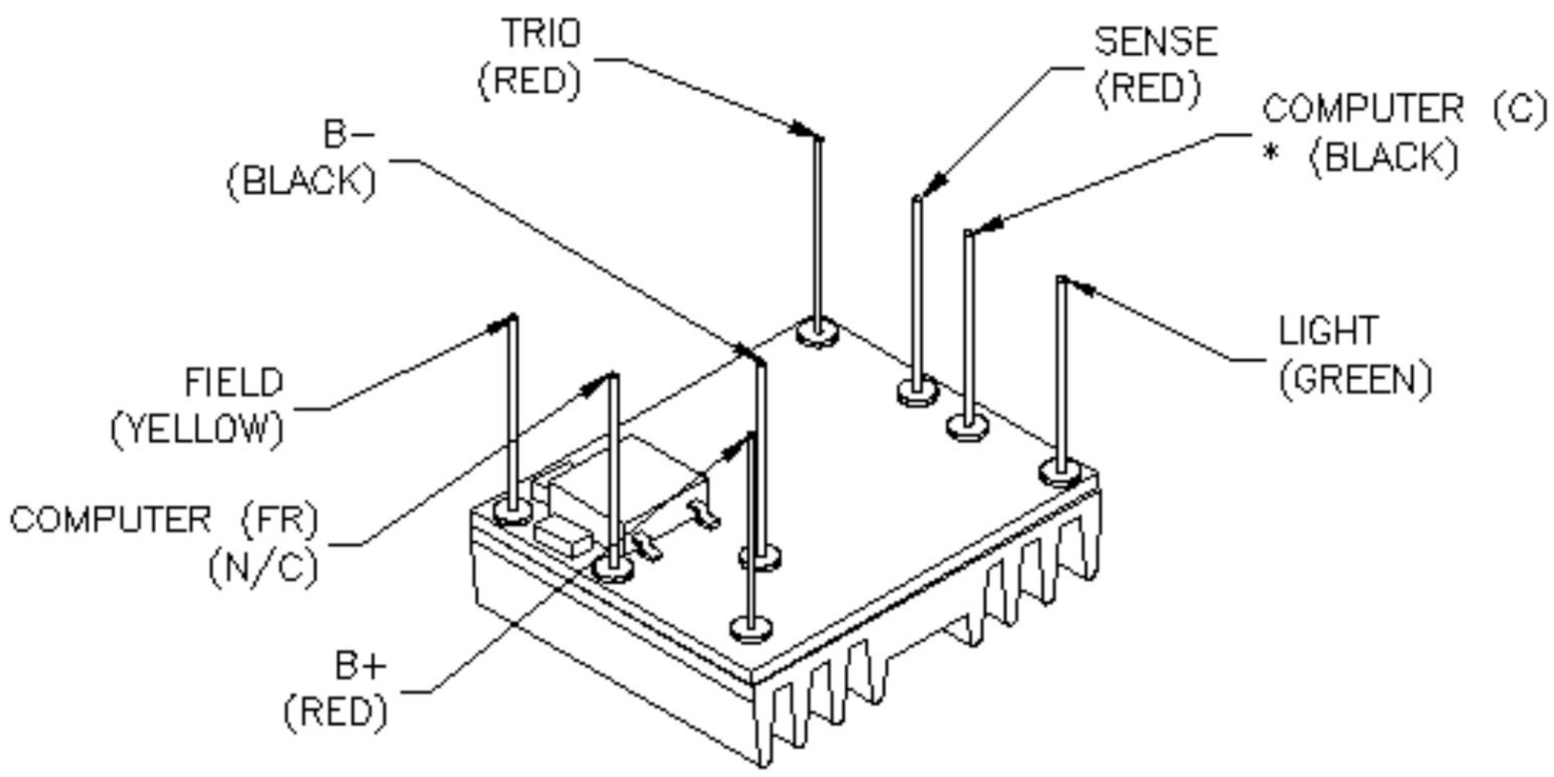

TRANSPO TESTER INSTRUCTIONS

for VALEO / MOTOROLA type regulators

PART NO.	FLD	VOLT	SET POINT	PART NO.	FLD	VOLT	SET POINT
M5-508	**B**	**12**	**14.4**				

1. POWER OFF: Set "Voltage Range" and "FLD" switches to desired setting. Connect the voltage regulator as indicated in the diagram below.

2. POWER ON: Field lamp should blink and meter will indicate approximately the set point voltage indicated in the above table.

3. ADDITIONAL TEST:

TRANSPO TESTER INSTRUCTIONS

for VALEO / MOTOROLA type regulators

PART NO.	FLD	VOLT	SET POINT	PART NO.	FLD	VOLT	SET POINT
M5-509	**B**	**12**	**14.1**				

1. POWER OFF: Set "Voltage Range" and "FLD" switches to desired setting. Connect the voltage regulator as indicated in the diagram below.

2. POWER ON: Field lamp should blink and meter will indicate approximately the set point voltage indicated in the above table.

3. ADDITIONAL TEST:

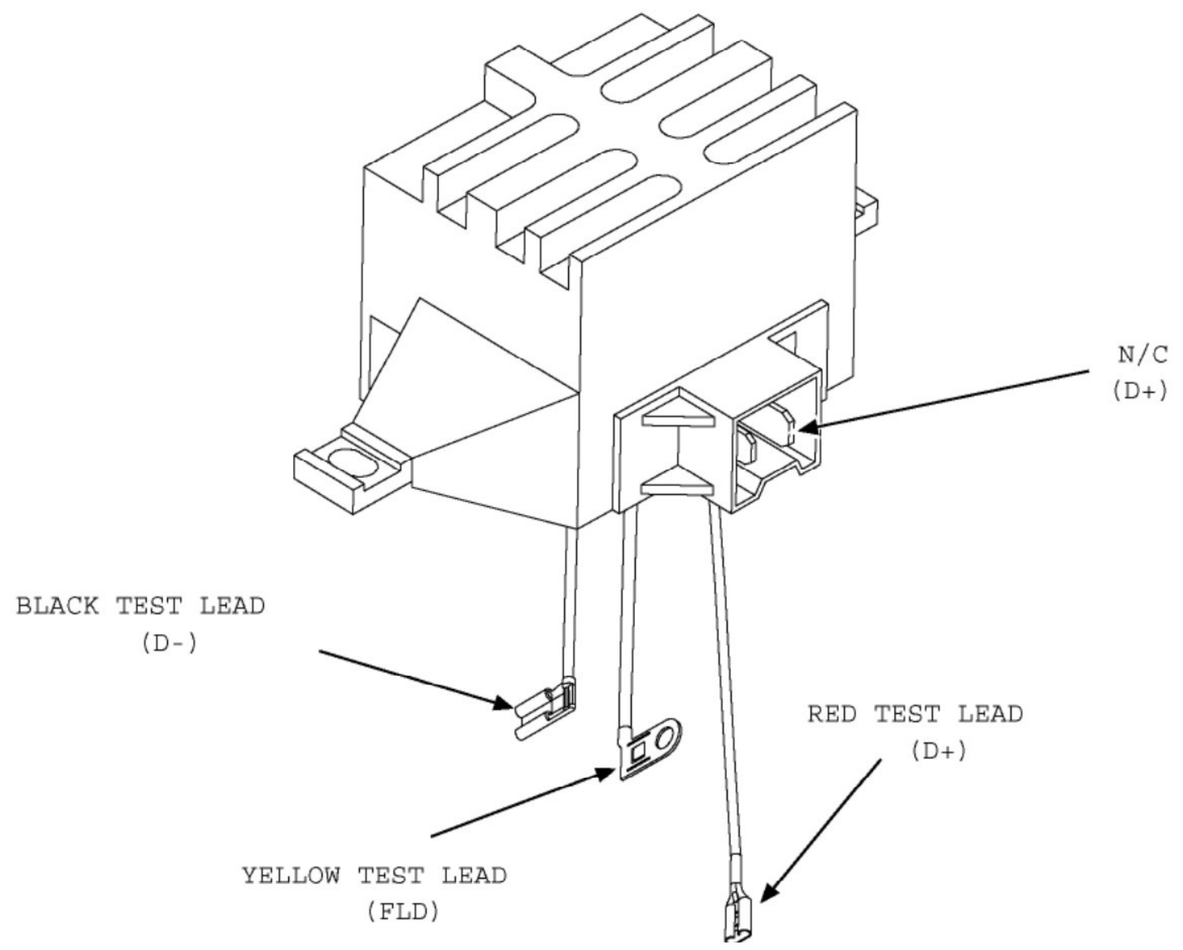

TRANSPO TESTER INSTRUCTIONS

for VALEO / MOTOROLA type regulators

PART NO.	FLD	VOLT	SET POINT	PART NO.	FLD	VOLT	SET POINT
M5-515	**B**	**12**	**14.5**				

1. POWER OFF: Set "Voltage Range" and "FLD" switches to desired setting. Connect the voltage regulator as indicated in the diagram below.

2. POWER ON: Field lamp should blink and meter will indicate approximately the set point voltage indicated in the above table.

3. ADDITIONAL TEST: Remove black test lead from terminal marked "D+". Indicator will come on.

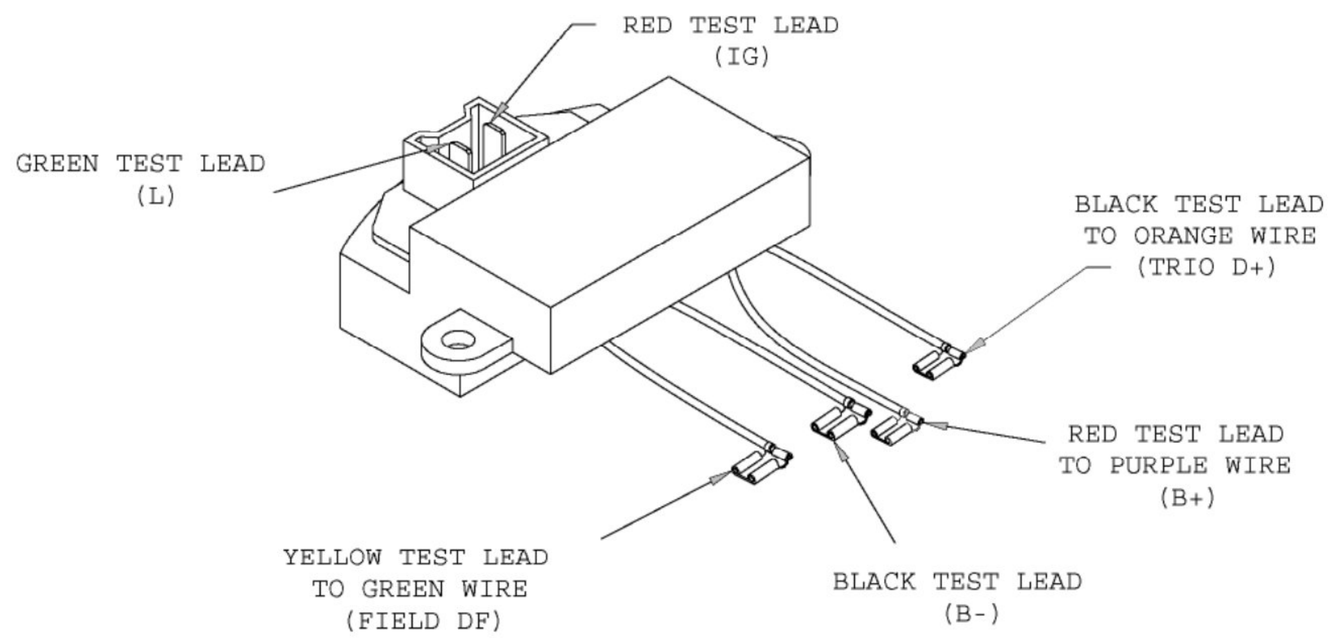

TRANSPO TESTER INSTRUCTIONS

for VALEO / MOTOROLA type regulators

PART NO.	FLD	VOLT	SET POINT	PART NO.	FLD	VOLT	SET POINT
M5-170A	**B**	**12**	**14.4**				
M5-742A	**B**	**12**	**14.4**				

1. POWER OFF: Set "Voltage Range" and "FLD" switches to desired setting. Connect the voltage regulator as indicated in the diagram below.

2. POWER ON: Field lamp should blink and meter will indicate approximately the set point voltage indicated in the above table.

3. ADDITIONAL TEST:

TRANSPO TESTER INSTRUCTIONS

for VALEO / MOTOROLA type regulators

PART NO.	FLD	VOLT	SET POINT	PART NO.	FLD	VOLT	SET POINT
M5-762	**B**	**12**	**14.3**				

1. POWER OFF: Set "Voltage Range" and "FLD" switches to desired setting. Connect the voltage regulator as indicated in the diagram below.

2. POWER ON: Field lamp should blink and meter will indicate approximately the set point voltage indicated in the above table.

3. ADDITIONAL TEST:

TRANSPO TESTER INSTRUCTIONS

for VALEO / MOTOROLA type regulators

PART NO.	FLD	VOLT	SET POINT	PART NO.	FLD	VOLT	SET POINT
M5-180A	**B**	**12**	**14.2**				
M5-241A	**B**	**12**	**14.2**				
M5-763A	**B**	**12**	**14.1**				
M5-764A	**B**	**12**	**14.2**				

1. POWER OFF: Set "Voltage Range" and "FLD" switches to desired setting. Connect the voltage regulator as indicated in the diagram below.

2. POWER ON: Field lamp should blink and meter will indicate approximately the set point voltage indicated in the above table.

3. ADDITIONAL TEST:

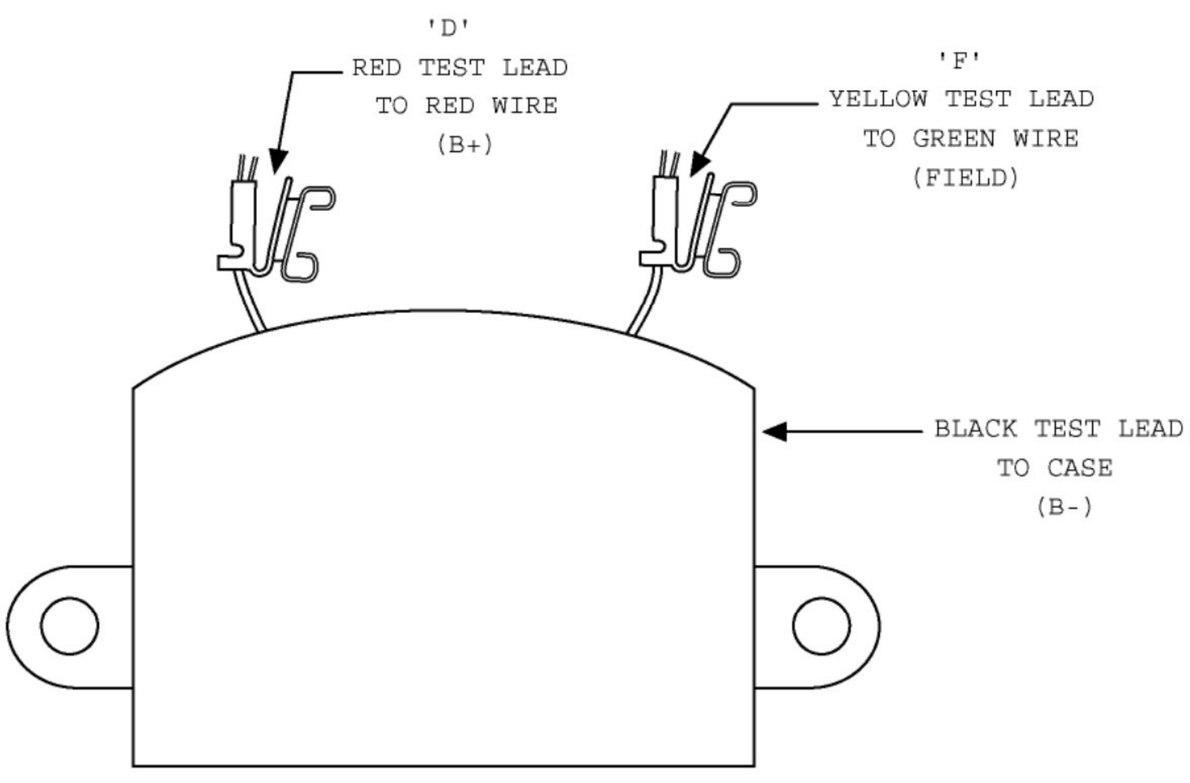

TRANSPO TESTER INSTRUCTIONS

for VALEO / MOTOROLA type regulators

PART NO.	FLD	VOLT	SET POINT	PART NO.	FLD	VOLT	SET POINT
M5-768	**B**	**12**	**14.5**				

1. POWER OFF: Set "Voltage Range" and "FLD" switches to desired setting. Connect the voltage regulator as indicated in the diagram below.

2. POWER ON: Field lamp should blink and meter will indicate approximately the set point voltage indicated in the above table.

3. ADDITIONAL TEST: Remove red test lead from terminal marked "D+". Indicator light will come on.

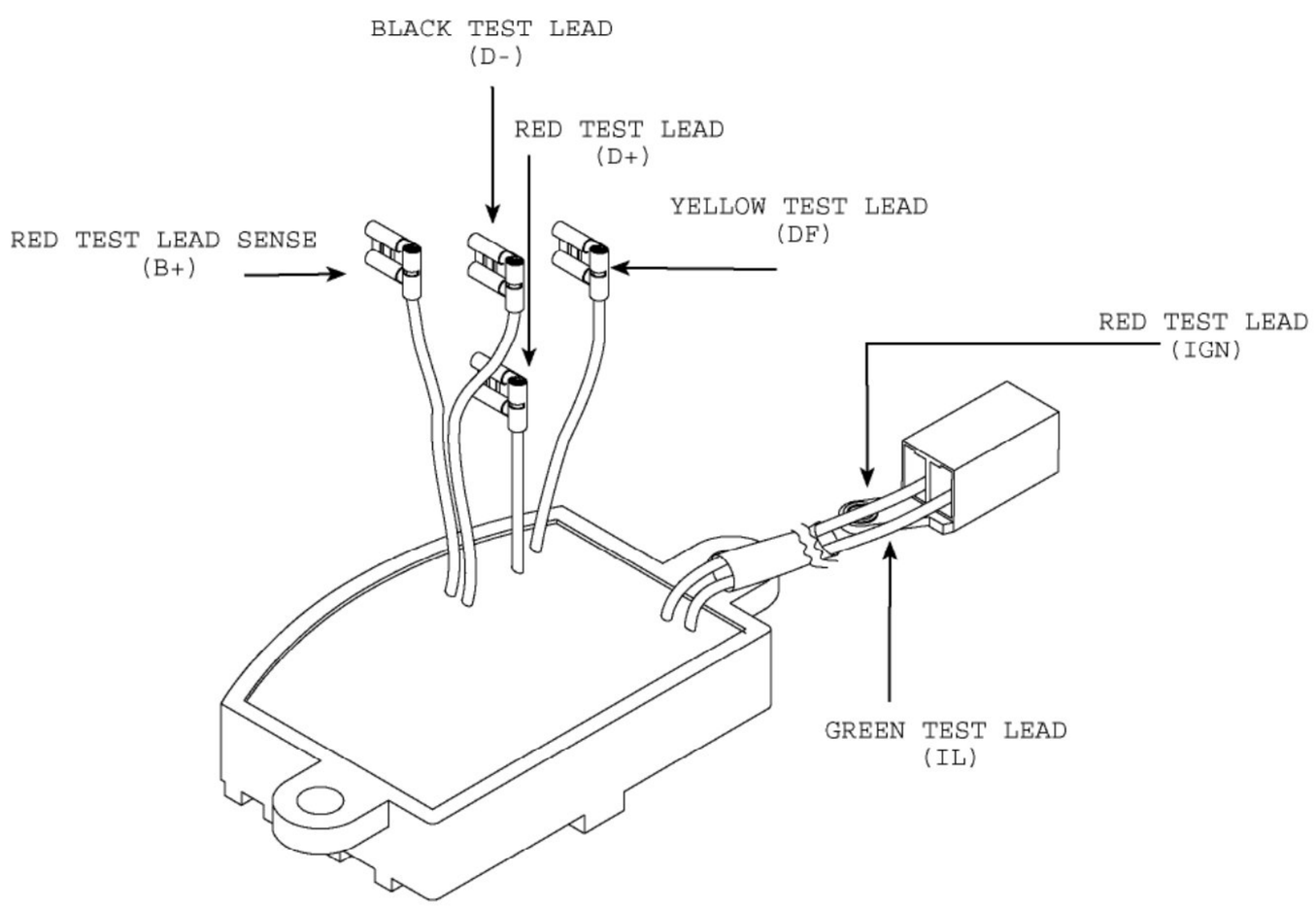

TRANSPO TESTER INSTRUCTIONS

for VALEO / MOTOROLA type regulators

PART NO.	FLD	VOLT	SET POINT	PART NO.	FLD	VOLT	SET POINT
M506	**A**	**12**	**15.0**				
M508	**A**	**12**	**15.0**				

1. POWER OFF: Set "Voltage Range" and "FLD" switches to desired setting. Connect the voltage regulator as indicated in the diagram below.

2. POWER ON: Field lamp should blink and meter will indicate approximately the set point voltage indicated in the above table.

3. ADDITIONAL TEST:

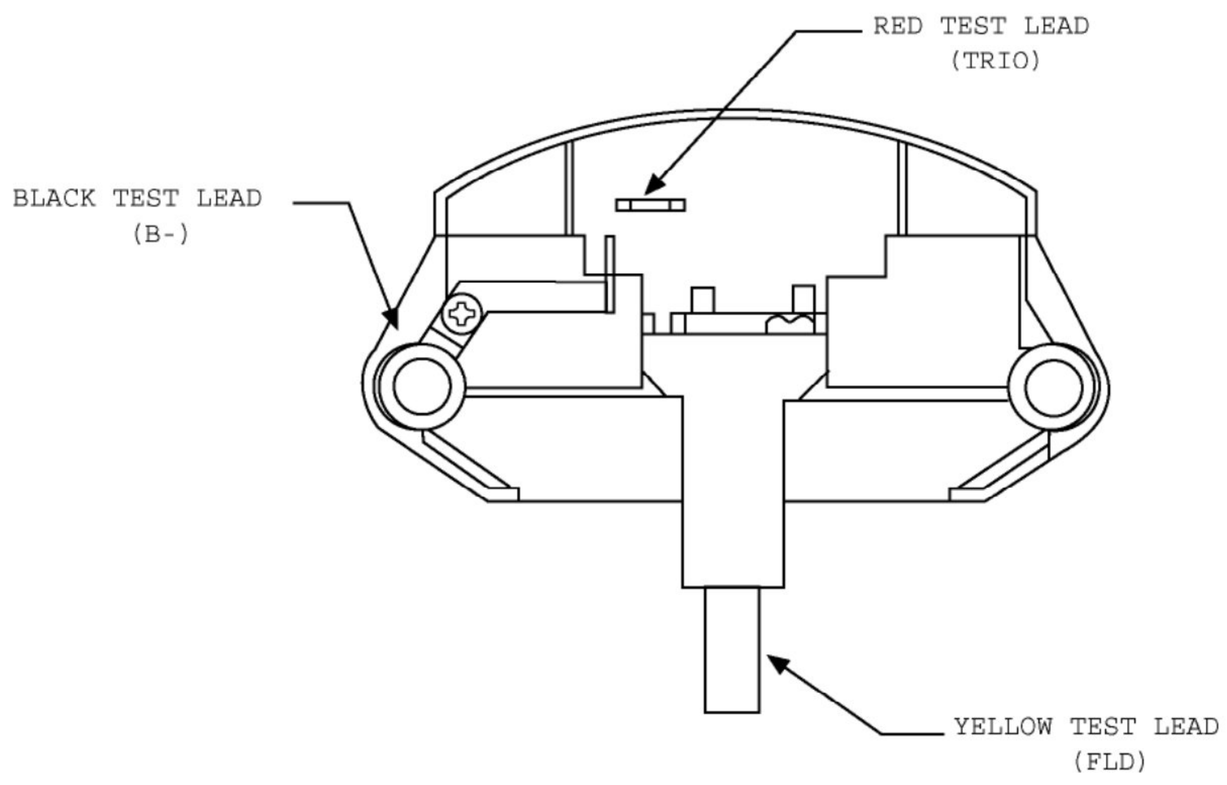

TRANSPO TESTER INSTRUCTIONS

for VALEO / MOTOROLA type regulators

PART NO.	FLD	VOLT	SET POINT	PART NO.	FLD	VOLT	SET POINT
M507	**A**	**12**	**14.4**				

1. POWER OFF: Set "Voltage Range" and "FLD" switches to desired setting. Connect the voltage regulator as indicated in the diagram below.

2. POWER ON: Field lamp should blink and meter will indicate approximately the set point voltage indicated in the above table.

3. ADDITIONAL TEST:

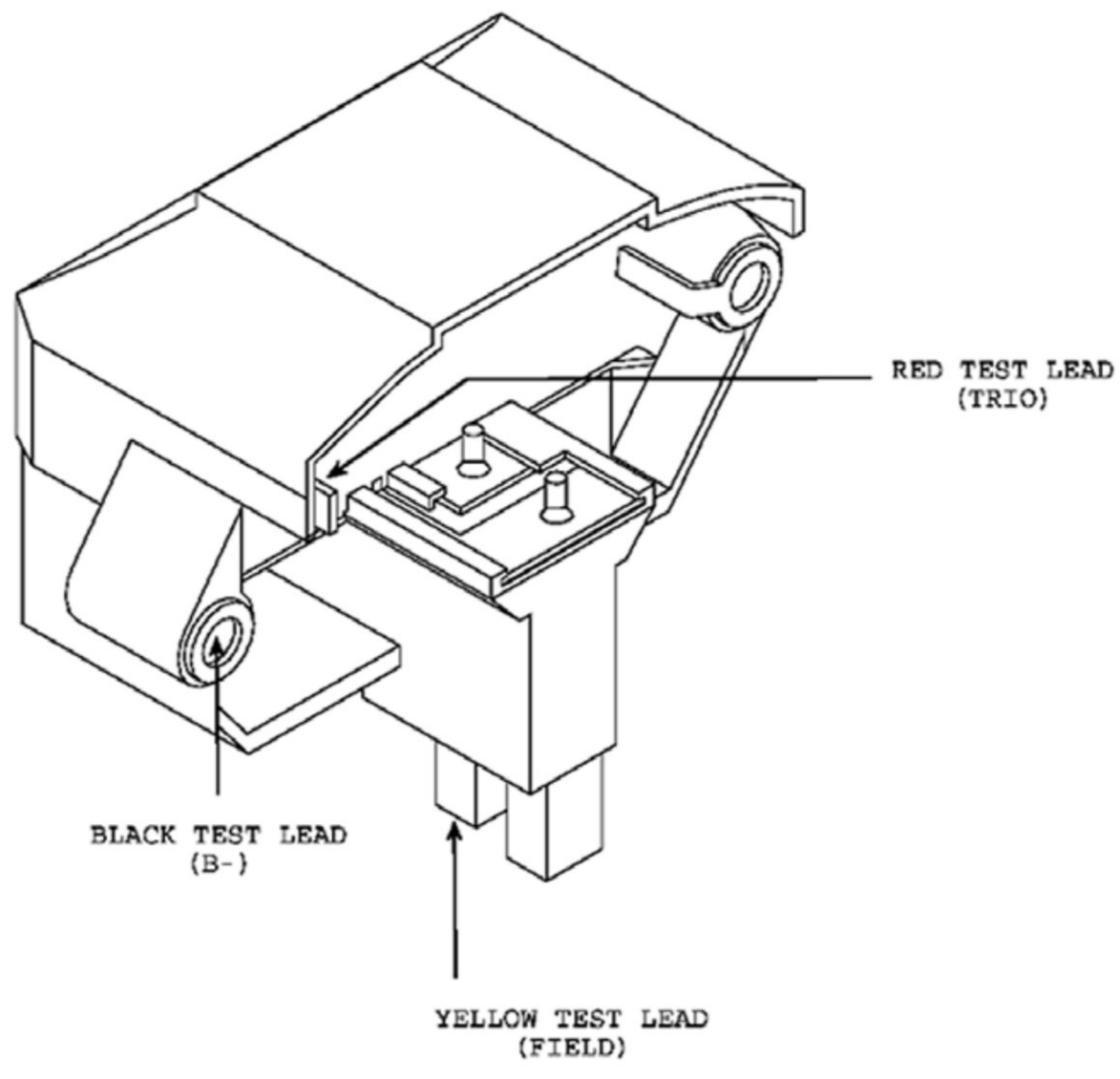

TRANSPO TESTER INSTRUCTIONS

for VALEO / MOTOROLA type regulators

PART NO.	FLD	VOLT	SET POINT	PART NO.	FLD	VOLT	SET POINT
M509	**A**	**12**	**14.4**				
M510	**A**	**12**	**14.4**				

1. POWER OFF: Set "Voltage Range" and "FLD" switches to desired setting. Connect the voltage regulator as indicated in the diagram below.

2. POWER ON: Field lamp should blink and meter will indicate approximately the set point voltage indicated in the above table.

3. ADDITIONAL TEST:

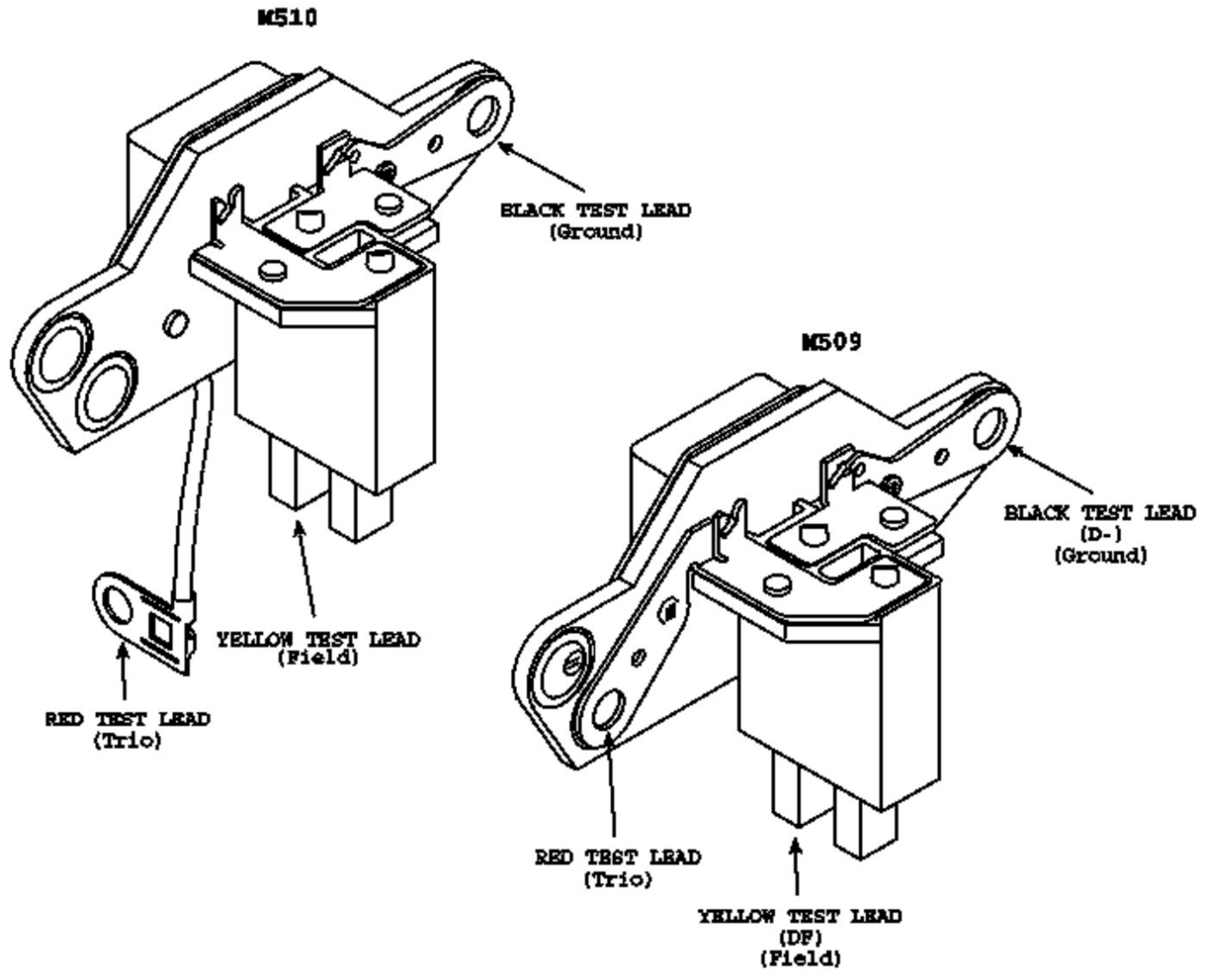

TRANSPO TESTER INSTRUCTIONS

for VALEO / MOTOROLA type regulators

PART NO.	FLD	VOLT	SET POINT	PART NO.	FLD	VOLT	SET POINT
M511	**A**	**14**	**14.5**				

1. POWER OFF: Set "Voltage Range" and "FLD" switches to desired setting. Connect the voltage regulator as indicated in the diagram below.

2. POWER ON: Field lamp should blink and meter will indicate approximately the set point voltage indicated in the above table.

3. ADDITIONAL TEST:

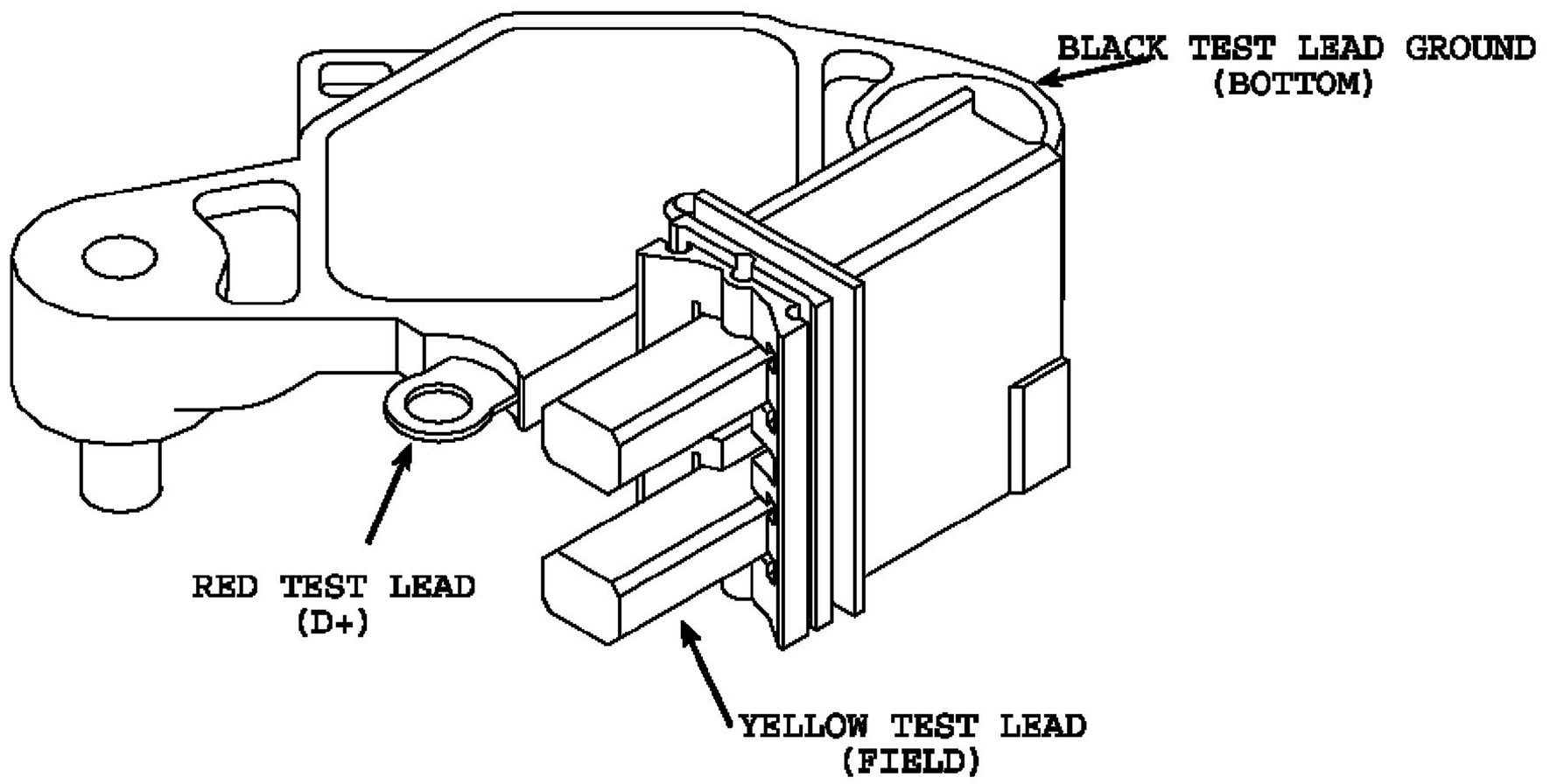

TRANSPO TESTER INSTRUCTIONS

for VALEO / MOTOROLA type regulators

PART NO.	FLD	VOLT	SET POINT	PART NO.	FLD	VOLT	SET POINT
M512	**A**	**12**	**14.6**				

1. POWER OFF: Set "Voltage Range" and "FLD" switches to desired setting. Connect the voltage regulator as indicated in the diagram below.

2. POWER ON: Field lamp should blink and meter will indicate approximately the set point voltage indicated in the above table.

3. ADDITIONAL TEST: Remove white lead from stator and voltage should drop to 12.0v. lamp should come on. Field circuit lamp stays on.

Using **VRC1000**: To check for over Voltage, push the "Over Voltage" switch and the "Lamp Indicator" will turn on between 16.0V and 17.1V.

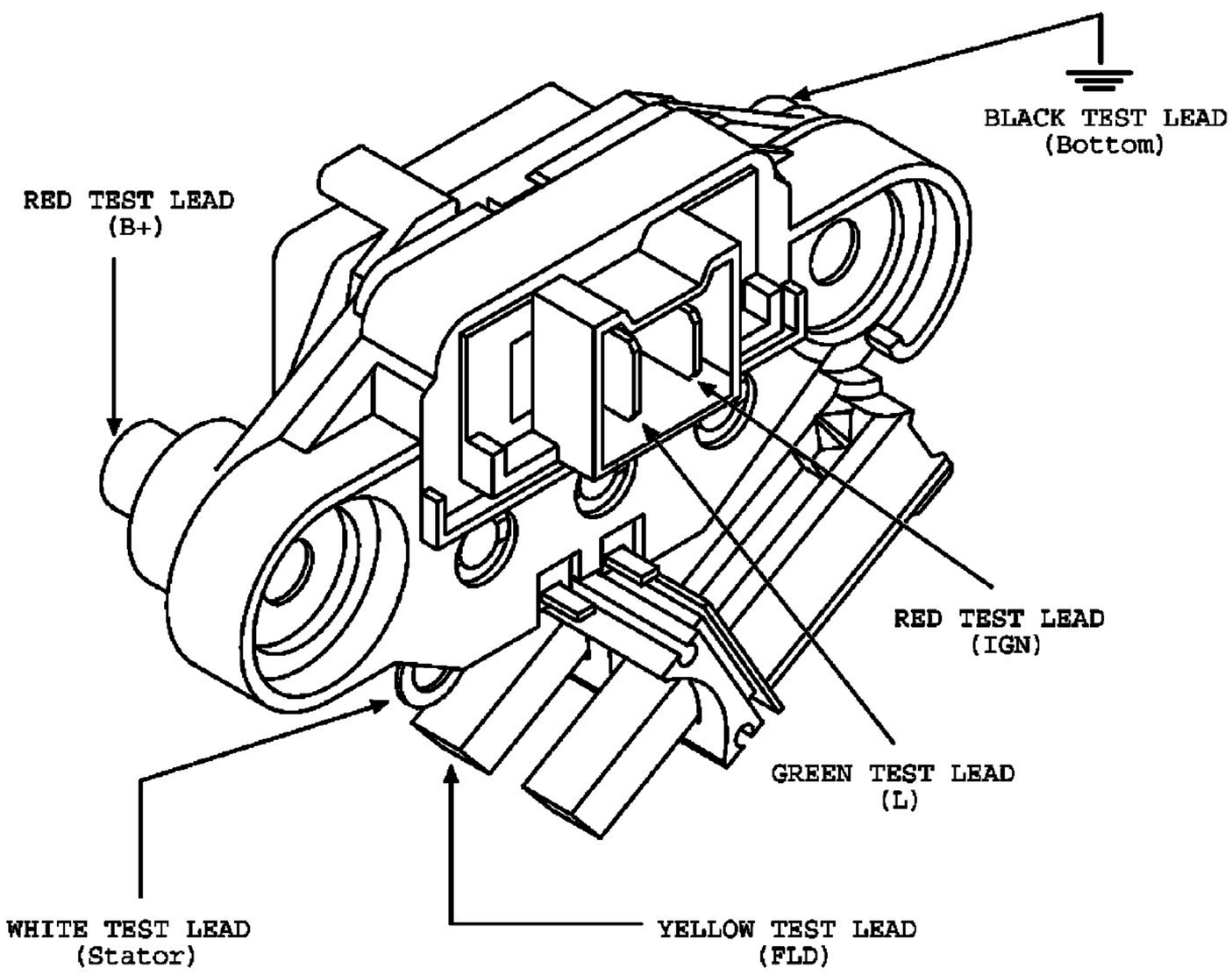

TRANSPO TESTER INSTRUCTIONS

for VALEO / MOTOROLA type regulators

PART NO.	FLD	VOLT	SET POINT	PART NO.	FLD	VOLT	SET POINT
M513	**A**	**12**	**14.6**				

1. POWER OFF: Set "Voltage Range" and "FLD" switches to desired setting. Connect the voltage regulator as indicated in the diagram below.

2. POWER ON: Field lamp should blink and meter will indicate approximately the set point voltage indicated in the above table.

3. ADDITIONAL TEST: Remove white lead from stator and voltage should drop to 12.0v and 12V lamp should come on. Field circuit lamp stays on.

Using VRC1000: To check for over Voltage, push the "Over Voltage" switch and the "Lamp Indicator" will turn on between 16.0V and 17.1V.

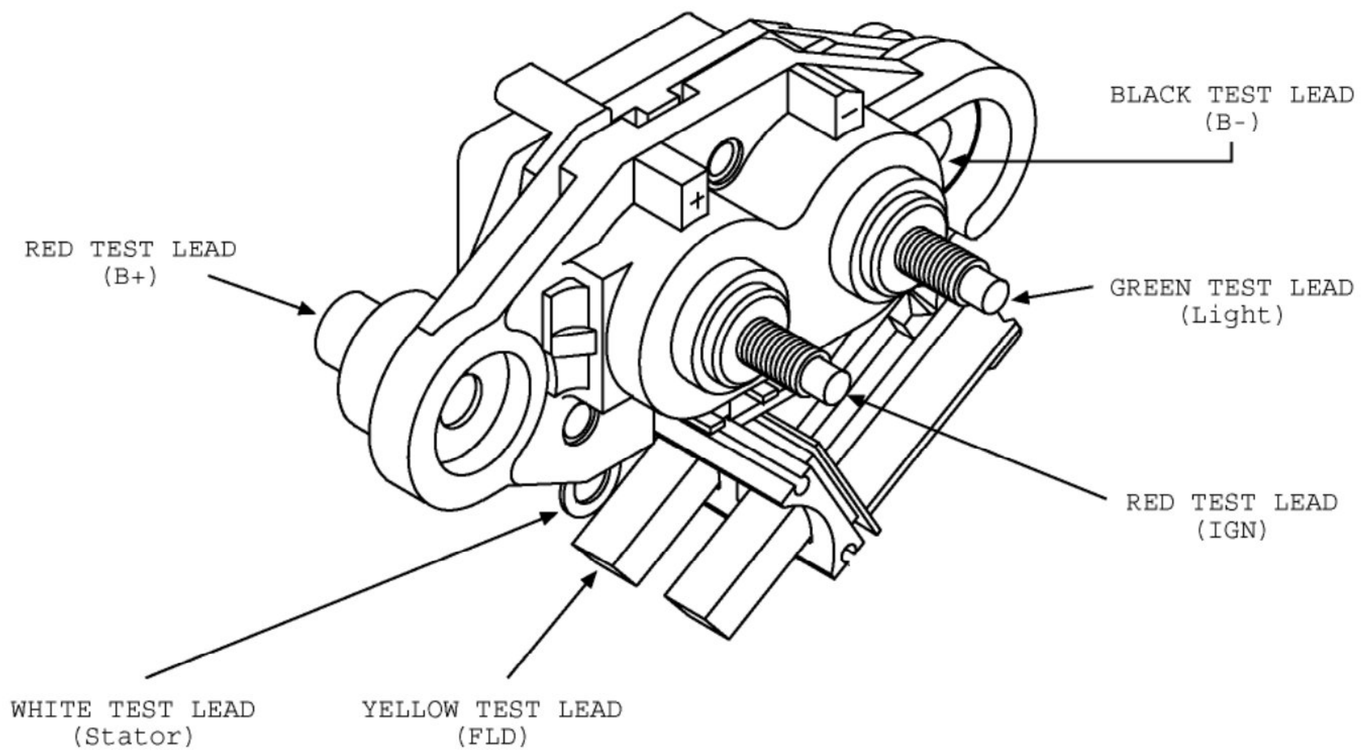

TRANSPO TESTER INSTRUCTIONS

for VALEO / MOTOROLA type regulators

PART NO.	FLD	VOLT	SET POINT	PART NO.	FLD	VOLT	SET POINT
M5-036	**B**	**12**	**14.4**				

1. POWER OFF: Set "Voltage Range" and "FLD" switches to desired setting. Connect the voltage regulator as indicated in the diagram below.

2. POWER ON: Field lamp should blink and meter will indicate approximately the set point voltage indicated in the above table.

3. ADDITIONAL TEST:

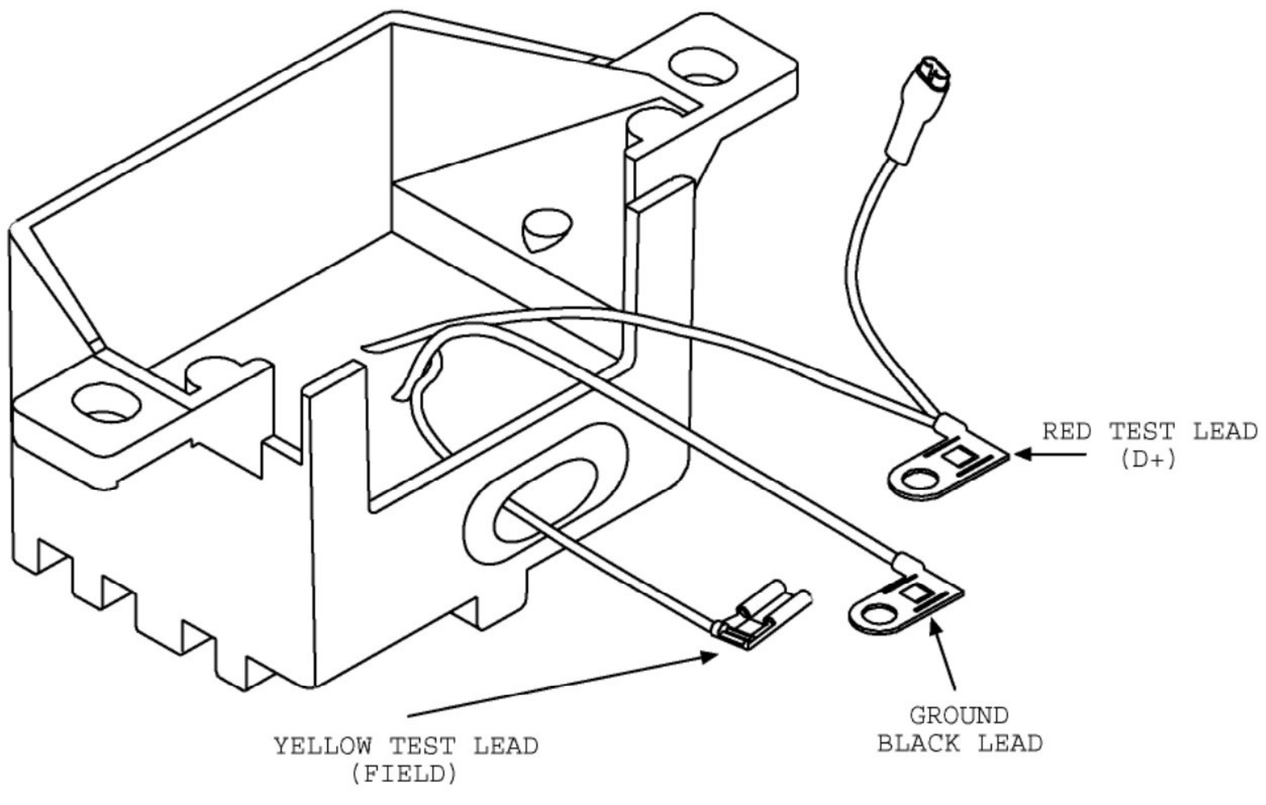

TRANSPO TESTER INSTRUCTIONS

for VALEO / MOTOROLA type regulators

PART NO.	FLD	VOLT	SET POINT	PART NO.	FLD	VOLT	SET POINT
M519	**B**	**12**	**14.5**				

1. POWER OFF: Set "Voltage Range" and "FLD" switches to desired setting. Connect the voltage regulator as indicated in the diagram below.

2. POWER ON: Field lamp should blink and meter will indicate approximately the set point voltage indicated in the above table.

3. ADDITIONAL TEST: Remove “White” lead from “Stator”, meter will read 12.0 volts field light will come on and 12 volt lamp will come on. Remove “Lamp” terminal and field light will go out and lamp light will go out.

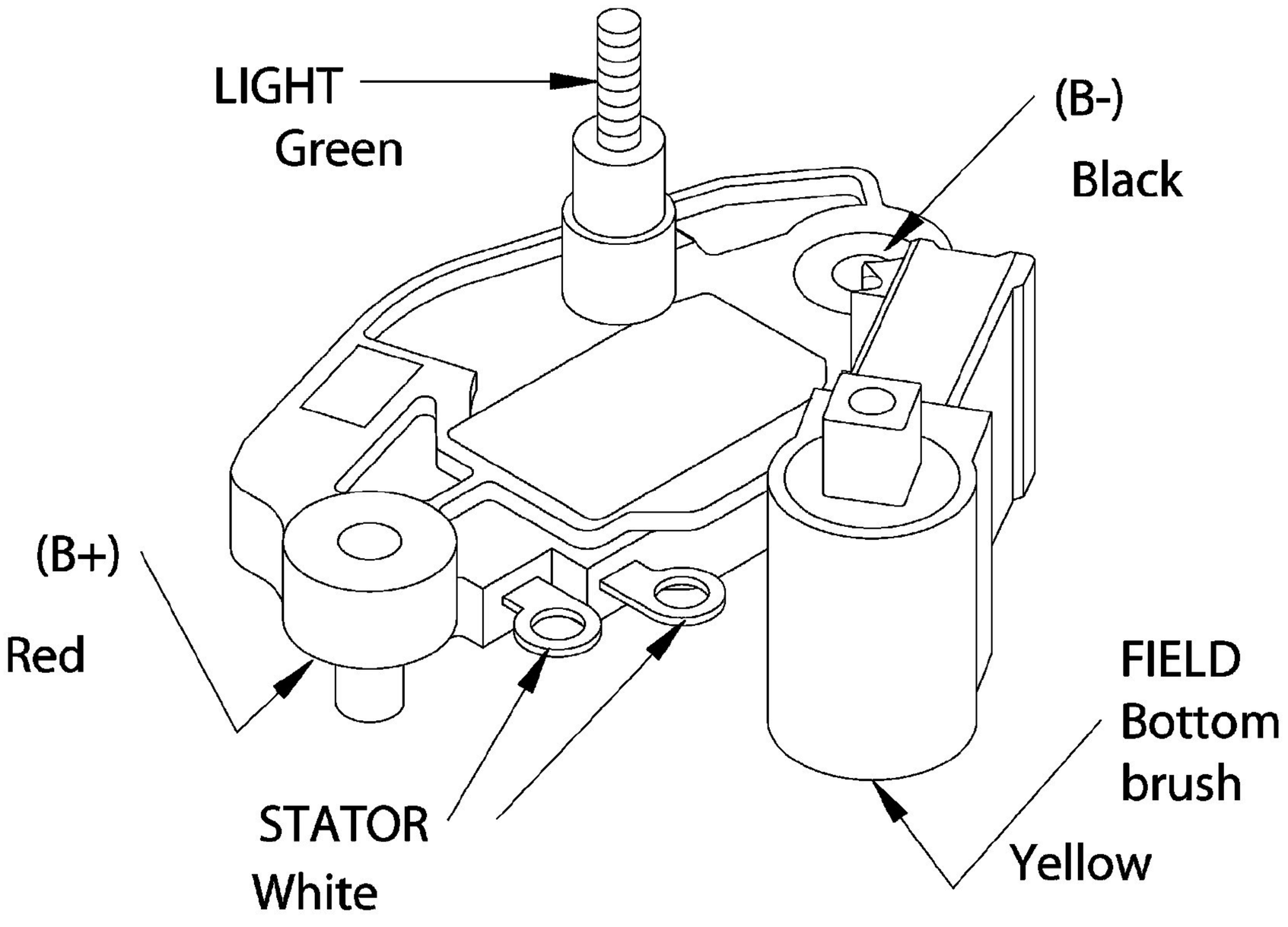

TRANSPO TESTER INSTRUCTIONS

for VALEO / MOTOROLA type regulators

PART NO.	FLD	VOLT	SET POINT	PART NO.	FLD	VOLT	SET POINT
M517	**B**	**12**	**14.4**				

1. POWER OFF: Set "Voltage Range" and "FLD" switches to desired setting. Connect the voltage regulator as indicated in the diagram below.

2. POWER ON: Field lamp should blink and meter will indicate approximately the set point voltage indicated in the above table.

3. ADDITIONAL TEST: Remove “White” lead from “Stator”, meter will read 12.0 volts field light will come on and 12 volt lamp will come on. Remove “Lamp” terminal and field light will go out and lamp light will go out.

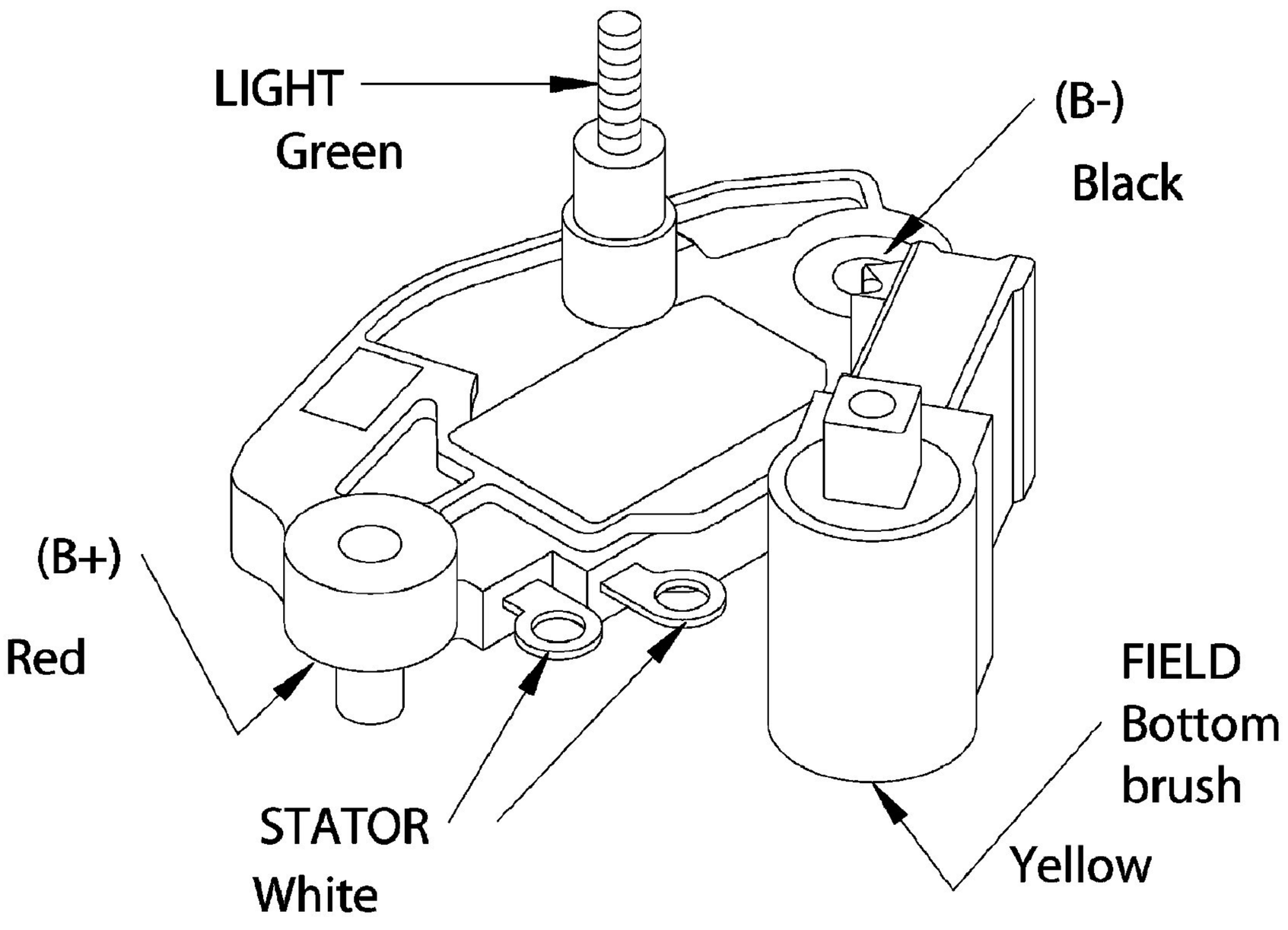

Tester Manual Index

Part #	Product Group #	Page #
911-01	911-01	372
911-02	911-01	372
911-03	911-02	373
911-04	911-02	373
911-11	911-01	372
911-12	911-01	372
911-13	911-02	373
911-14	911-02	373
911-21	911-01	372
911-22	911-01	372
911-23	911-02	373
911-24	911-02	373
A2-104	N-09	311
A2-107	N-09	311
A2-115	N-04	306
A2-150	N-06	308
A2-157	N-06	308
A2-15803	N-06	308
A2-402	N-08	310
A2-404	N-05	307
A2-405	N-04	306
A2-406	N-07	309
A2-420	N-05	307
A2-421	N-05	307
A2-702	N-09	311
A2-704	N-09	311
C8010	C-02	37
C8012	C-02	37
C8312	C-01	36
C8312C	C-01	36
C8312HD	C-01	36
C8313	C-01	36
C8315	C-01	36
CE301	CE-03	35
CE520	CE-01	33
CE533	CE-02	34
D10	D-01	38
D101	D-02	39
D101D	D-02	39
D101HD	D-03	40
D102HD	D-03	40
D104D	D-01	38
D105	D-02	39
D105D	D-02	39
D105HD	D-02	39
D10AC	D-37	74
D10DN24	D-04	41
D10DN24L	D-04	41
D10SE12	D-02	39
D10SE132-1	D-39	76
D10SE138-1	D-39	76
D10SE24	D-01	38
D10SE6	D-02	39
D10SE8	D-01	38
D173L	D-16	53
D17SE	D-03	40
D198	D-35	72
D199	D-35	72
D200	D-35	72
D201	D-35	72
D202	D-35	72
D203	D-35	72
D21	D-01	38
D22	D-30	67
D22AC	D-37	74
D27	D-03	40
D27HD	D-03	40
D27S	D-03	40
D30	D-01	38
D30S	D-03	40
D3101	D-36	73
D32S	D-02	39
D33	D-30	67
D401	D-31	68
D403	DA-01	37
D404	D-38	75
D408	D-13	50
D411	D-13	50
D411SE	D-14	51
D412	D-14	51
D413	D-14	51
D424	D-23	60
D425	D-14	51
D428	D-13	50
D429	D-13	50
D432	D-24	61
D436	D-13	50
D437	D-11	48
D437P	D-10	47
D440	D-14	51
D440G	D-13	50
D443	D-07	44
D443P	D-09	46
D445	D-33	70
D446	D-14	51
D447	D-07	44
D447P	D-09	47
D518	D-06	43
D529	D-22	59
D551	D-07	44
D551P	D-08	45
D559	D-11	48
D559P	D-10	47
D590M	D-17	54
D590S	D-17	54
D591M	D-17	54
D591S	D-17	54
D593M	D-17	54
D593S	D-17	54
D597	D-07	44
D597P	D-08	45
D6374	D-06	43
D6377	D-06	43
D6378	D-06	43
D698	D-32	69
D699	D-32	69
D7010	ST-D-42	79
D7011	ST-D-42	79
D7012	ST-D-42	79
D7013	ST-D-42	79
D7014	ST-D-42	79
D7015	ST-D-42	79
D7016	ST-D-42	79
D7018	D-20	57
D7019	D-20	57
D702	D-29	66
D7020	ST-D-43	80
D7021	ST-D-43	80
D7022	ST-D-43	80

Tester Manual Index

Part #	Product Group #	Page #	Part #	Product Group #	Page #	Part #	Product Group #	Page #
D7023	ST-D-43	80	DE605	D-05	42	F795	F-03	98
D7024	ST-D-43	80	DE606	D-21	58	F796	F-08	103
D7025	ST-D-43	80	DE607	D-21	58	F797	F-13	108
D7026	ST-D-43	80	DE608	D-01	38	F798	F-10	105
D7027	ST-D-44	81	DE609	D-05	42	F8512	F-02	97
D702HD	D-29	66	DE610	D-01	38	F8512M	F-02	97
D7028	D-42	78	DE611	D-26	63	F8512S	F-02	97
D703	D-29	66	DE615	D-26	63	FB123	F-06	101
D7041	ST-D-42	79	DE701	D-28	65	FB303	F-06	101
D7044	ST-D-43	80	DE708	D-41	78	FB309	F-06	101
D7046	ST-D-44	81	DE701-1	D-28	65	GC100	SR-01	371
D705	D-29	66	E40060	E-01	89	H0478	H-01	109
D7050	D-27	64	E40070	E-01	89	H0482	H-01	109
D706	D-29	66	E40080	E-01	89	H606	H-02	110
D710	D-16	53	E60030	E-03	91	H614	H-02	110
D712	D-34	71	E60040	E-03	91	IB033A	IB-08	7
D713	D-16	53	E60050	E-03	91	IB225	IB-26	25
D718	D-34	71	E70260	E-04	92	IB229	IB-30	30
D719	D-34	71	E7026HD	E-02	90	IB235	IB-32	32
D729	D-34	71	E70690	E-04	92	IB241	IB-27	27
D734	D-34	71	F7069HD	E-02	90	IB251	IB-29	29
D748	D-34	71	F374	F-04	99	IB301	IB-02	2
D749	D-34	71	F540	F-01	96	IB302	IB-02	2
D751	D-40	77	F540HD	F-01	96	IB302A	IB-02	2
D752	D-34	71	F540S	F-01	96	IB303	IB-05	4
D812	D-18	55	F540SLD	F-01	96	IB303A	IB-05	4
D812AC	D-18	55	F540SP	F-01	96	IB305	IB-09	8
D812HD	D-19	56	F540XHD	F-01	96	IB306	IB-09	8
D813	D-18	55	F600	F-09	104	IB308	IB-10	9
D813HD	D-18	55	F601	F-12	107	IB316	IB-31	16
D817	D-19	56	F602	F-11	106	IB343	IB-11	10
D817AC	D-15	52	F603	F-11	106	IB348	IB-12	11
D817HD	D-19	56	F605	F-11	106	IB350	IB-12	11
D824	D-18	55	F606	F-11	106	IB351	IB-12	11
D824AC	D-15	52	F7078	F-07	102	IB352	IB-12	11
D824HD	D-19	56	F733	F-05	100	IB353	IB-12	11
D832	D-18	55	F733L	F-05	100	IB354	IB-12	11
D832HD	D-19	52	F782	F-01	96	IB355	IB-12	11
D875	D-12	49	F783	F-01	96	IB356	IB-12	11
D876	D-12	49	F784	F-03	98	IB360	IB-25	24
D9206	D-25	62	F784B	F-03	98	IB362	IB-25	24
D9207	D-25	62	F784HD	F-03	98	IB363	IB-25	24
D9212	D-06	43	F785	F-03	98	IB364	IB-25	24
D9212C	D-06	43	F786	F-03	98	IB365	IB-14	13
D9212S	D-06	43	F794	F-03	98	IB366-1	IB-25	24
DE604	D-05	42	F794B	F-03	98	IB368	IB-25	24

Tester Manual Index

Part #	Product Group #	Page #	Part #	Product Group #	Page #	Part #	Product Group #	Page #
IB369	IB-25	24	IF8603	IF-01	93	IH766	IH-29	139
IB370	IB13	12	IF8607	IF-01	93	IH767	IH-26	138
IB370A	IB-13	12	IH201	IH-03	113	IH769	IH-36	146
IB370HR	IB-01	1	IH202	IH-03	113	IH770	IH-30	140
IB371	IB-01	1	IH203	IH-03	113	IH772	IH-34	144
IB372	IB-01	1	IH205	IH-27	137	IH774	IH-39	149
IB373	IB-01	1	IH209	IH-02	112	IH776	IH-31	141
IB374	IB-06	5	IH210	IH-02	112	IH782	IH-32	142
IB375	IB-06	5	IH210HD	IH-02	112	IH811	IH-05	115
IB376	IB-06	5	IH211	IH-02	112	IH814	IH-05	115
IB377	IB-06	5	IH212	IH-02	112	IH815	IH-08	118
IB378	IB-06	5	IH213	IH-02	112	IH816	IH-08	118
IB379	IB-06	5	IH214	IH-04	114	IH820	IH-05	115
IB380	IB-07	6	IH215	IH-04	114	IH830	IH-08	118
IB381	IB-17	16	IH237	IH-06	116	IH832	IH-I6	126
IB382	IB-17	16	IH238	IH-06	116	IH833	IH-07	117
IB383	IB-07	6	IH239	IH-06	116	IK401	IK-02	153
IB384	IB-07	6	IH240	IH-09	119	IK404	IK-01	152
IB385	IB-07	6	IH241	IH-11	121	IL1292	IL-06	171
IB386	IB-15	14	IH242	IH-13	123	IL211	IL-01	166
IB387	IB-07	7	IH243	IH-12	122	IL213	IL-01	166
IB388	IB-20	19	IH244	IH-11	121	IL214	IL-02	167
IB390	IB-24	23	IH245	IH-10	120	IL215	IL-02	167
IB391	IB-04	26	IH246	IH-12	124	IL216	IL-02	167
IB392	IB-04	26	IH247	IH-14	124	IL217	IL-01	166
IB392BG	IB-28	28	IH248	IH-15	125	IL218	IL-02	167
IB398	IB-16	15	IH249	IH-22	132	IL219	IL-05	170
IB399	IB-22	21	IH250	IH-18	138	IL220	IL-05	170
IB400	IB-23	22	IH251	IH-23	133	IL221	IL-05	170
IB501	IB-21	20	IH252	IH-24	134	IL222	IL-05	170
IB511	IB-18	17	IH254	IH-28	138	IL223	IL-03	168
IB512	IB-19	18	IH258	IH-35	145	IL224	IL-04	169
IB8315	IB-03	3	IH605	IH-01	111	IL225	IL-03	168
ID1004	ID-04	85	IH707	IH-04	114	IM204	IM-01	188
ID1006	ID-01	82	IH708	IH-19	129	IM204HD	IM-01	188
ID1007	ID-05	86	IH717	IH-17	127	IM205	IM-01	188
ID1010	ID-01	82	IH738	IH-38	148	IM206	IM-21	208
ID1011	ID-06	87	IH742	IH-40	150	IM207	IM-18	205
ID1015	ID-03	84	IH744	IH-37	147	IM208	IM-19	206
ID1016	ID-04	85	IH758	IH-41	151	IM209	IM-26	213
ID1018	ID-07	88	IH760	IH-20	130	IM210	IM-27	214
ID4009	ID-02	83	IH761	IH-21	131	IM211	IM-50	237
ID4009-1	ID-02	83	IH762	IH-25	135	IM212	IM-19	206
IF1692	IF-03	95	IH763	IH-33	143	IM213	IM-18	205
IF5442	IF-02	94	IH765	IH-26	136	IM214	IM-20	207

Tester Manual Index

Part #	Product Group #	Page #	Part #	Product Group #	Page #	Part #	Product Group #	Page #
IM215	IM-16	203	IM293	IM-43	230	IN222	IN-17	331
IM216	IM-03	190	IM294	IM-46	233	IN223	IN-07	321
IM216HD	IM-03	190	IM318	IM-47	234	IN224	IN-17	331
IM217	IM-03	190	IM341	IM-59	246	IN225	IN-17	331
IM217HD	IM-03	190	IM345	IM-52	239	IN226	IN-27	340
IM224	IM-02	189	IM350	IM-58	245	IN227	IN-17	331
IM225	IM-01	188	IM358	IM-60	247	IN228	IN-23	336
IM226	IM-15	202	IM369	IM-54	241	IN229	IN-03	317
IM227	IM-17	204	IM381	IM-51	238	IN229HD	IN-03	317
IM232	IM-49	236	IM465	IM-62	249	IN230	IN-24	337
IM261	IM-06	193	IM542	IM-05	192	IN231	IN-06	320
IM262	IM-08	195	IM604	IM-07	194	IN232	IN-06	320
IM263	IM-08	195	IM757	IM-56	243	IN233	IN-11	325
IM265	M-08	195	IM829	IM-31	218	IN234	IN-02	316
IM265HD	IM-08	195	IM830	IM-32	219	IN235	IN-05	319
IM266	IM-09	196	IM830HD	IM-41	228	IN250	IN-27	340
IM266HD	IM-09	196	IM831	IM-44	231	IN251	IN-17	331
M267	IM-10	197	IM832	IM-37	224	IN252	IN-17	331
IM268	IM-04	191	IM834	IM-38	225	IN253	IN-18	332
IM269	IM-06	193	IM835	IM-22	209	IN254	IN-18	332
IM270	IM-04	191	IM836	IM-39	226	IN255	IN-18	332
IM271	IM-11	198	IM837	IM-24	211	IN256	IN-27	340
IM272	IM-12	199	IM839	IM-22	209	IN277	IN-39	351
IM273	IM-22	209	IM840	IM-42	229	IN429	IN-18	332
IM274	IM-13	200	IM843	IM-53	240	IN431	IN-18	332
IM275	IM-38	225	IM845	IM-45	232	IN434	IN-28	341
IM276	IM-28	215	IM846	IM-63	250	IN435	IN-18	332
IM277	IM-14	201	IM848	IM-57	244	IN436	IN-27	340
IM278	IM-14	201	IM850	IM-48	235	IN437	IN-27	340
IM279	IM-14	201	IM851	IM-55	242	IN438	IN-28	341
IM280	IM-24	211	IM853	IM-61	248	IN439	IN-27	340
IM281	IM-23	210	IM951	IM-05	192	IN440	IN-33	345
IM282	IM-23	210	IM952	IM-05	192	IN441	IN-12	326
IM283	IM-30	217	IM954	IM-05	192	IN442	IN-13	327
IM284	IM-25	212	IN209	IN-01	315	IN444	IN-27	340
IM285	IM-33	220	IN210	IN-01	315	IN445	IN-35	347
IM286	IM-46	233	IN215	IN-38	350	IN449	IN-33	345
IM287	IM-29	216	IN217	IN-04	318	IN450	IN-34	346
IM288	IM-34	221	IN218	IN-04	318	IN453	IN-36	348
IM289	IM-03	190	IN219	IN-17	331	IN455	IN-37	349
IM290	IM-40	227	IN220	IN-27	340	IN550	IN-08	322
IM291	IM-35	222	IN220E	IN-32	344	IN551	IN-09	323
IM292	IM-36	223	IN221	IN-17	331	IN554	IN-22	335

Tester Manual Index

Part #	Product Group #	Page #	Part #	Product Group #	Page #	Part #	Product Group #	Page #
IN555	IN-31	343	IS219A	IS-01	367	L79000S	L-01	155
IN558	IN-09	323	IS222	IS-02	368	L79000X	L-01	155
IN560	IN-09	323	IS223	IS-04	369	L79350S	L-02	158
IN562	IN-09	323	IS301	IS-03	369	L95019	L-01	155
IN567	IN-20	333	IX106	IX-01	172	L95300S	L-04	158
IN568	IN-25	338	IX107	IX-01	172	L96345AC	L-03	157
IN569	IN-10	324	IX108	IX-01	172	L96852	L-01	155
IN578	IN-10	324	IX109	IX-01	172	L97050S	L-02	158
IN579	IN-09	323	IX110	IX-02	173	L97300AC	L-05	159
IN589	IN-10	324	IX111	IX-02	173	L97300S	L-06	160
IN600	IN-14	328	IX118	IX-07	178	L99500S	L-04	158
IN601	IN-15	329	IX121	IX-04	175	L99825S	L-04	158
IN602	IN-16	330	IX123	IX-06	177	L99850S	L-04	158
IN774	IN-28	341	IX127	IX-05	176	L99920	L-11	165
IN821	IN-26	339	IX128	IX-05	176	M506	M-08	401
IN822	IN-09	323	IX131	IX-08	179	M507	M-09	402
IN8315	IN-21	334	IX4004	IX-03	174	M508	M-08	401
IN920	IN-30	342	IY058	IY-04	186	M509	M-10	403
IP122	IP-04	355	IY422	IY-03	185	M510	M-10	403
IP123	IP-10	361	IY510	IY-02	184	M511	M-11	404
IP125	IP-01	352	IY785	IY-01	183	M512	M-12	405
IP125F	IP-01	352	IY786	IY-01	183	M513	M-13	406
IP126	IP-01	352	IY903	IY-05	187	M517	M-16	409
IP127	IP-02	353	IZ226	IZ-01	313	M519	M-15	408
IP129B	IP-03	354	IZ227	IZ-01	313	M5-036	M-14	407
IP130	IP-07	358	IZ228	IZ-02	314	M5-050A	M5-39	290
IP135	IP-03	354	L1666280	L-09	163	M5-104A	M5-44	295
IP135B	IP-03	354	L5003	L-10	164	M5-109A	M5-14	265
IP137	IP-05	356	L5016	L-08	162	M5-113A	M5-08	259
IP152	IP-04	355	L5022	L-07	161	M5-118A	M5-17	268
IP1639	IP-04	355	L5028	L-08	162	M5-121A	M5-44	295
IP1652	IP-11	362	L5042	L-07	161	M5-122A	M5-08	259
IP1652F	IP-04	355	L5042HD	L-07	161	M5-123A	M5-47	298
IP1655	IP-04	357	L5062	L-07	161	M5-125	M5-44	295
IP1903	IP-05	356	L5078	L-07	161	M5-128A	M5-47	298
IP1926	IP-08	359	L77973AC	L-05	159	M5-130	M5-04	256
IP2700	IP-05	356	L77973S	L-06	160	M5-130A	M5-04	255
IP729B	IP-06	357	L78855S	L-06	160	M5-134A	M5-17	268
IP735B	IP-06	357	L78935S	L-06	160	M5-135A	M5-04	255
IP736	IP-09	360	L79000	L-01	155	M5-136A	M5-01	251 , 252
IP955	IP-01	352	L79000AC	L-03	157	M5-137A	M5-07	258
IR674	IR-01	154	L79000HD	L-01	155	M5-138A	M5-10	261
IS219	IS-01	367	L79000HDP	L-01	155	M5-139A	M5-15	266
IS219-30	IS-01	367	L79000LH	L-01	155	M5-140A	M5-14	265

Tester Manual Index

Part #	Product Group #	Page #	Part #	Product Group #	Page #	Part #	Product Group #	Page #
M5-141A	M5-04	255	M5-183A	M5-43	294	M5-239A	M5-03	254
M5-142A	M5-07	258	M5-184A	M5-07	258	M5-24A	M5-10	261
M5-143A	M5-05	256	M5-185A	M5-05	256	M5-240A	M5-33	284
M5-144A	M5-17	268	M5-191A	M5-02	253	M5-241A	M-06	399
M5-145A	M5-18	269	M5-192A	M5-29	280	M5-242A	M5-41	292
M5-146	M5-16	267	M5-193A	M5-33	284	M5-244A	M5-20	271
M5-146A	M5-16	267	M5-196A	M5-12	263	M5-245A	M5-28	279
M5-147A	M5-01	251 , 252	M5-197A	M5-19	270	M5-247A	M5-37	288
M5-148A	M5-01	251 , 252	M5-198A	M5-20	271	M5-248A	M5-41	292
M5-149A	M5-31	282	M5-200A	M5-20	271	M5-249A	M5-38	289
M5-150A	M5-05	256	M5-200SA12	M5-21	272	M5-25A	M5-15	266
M5-151A	M5-41	292	M5-200SA24	M5-21	272	M5-250A	M5-19	270
M5-151SA12	M5-42	293	M5-200SA32	M5-21	272	M5-251	M5-51	302
M5-151SA24	M5-42	293	M5-200SA6	M5-21	272	M5-26A	M5-43	294
M5-151SA32	M5-42	293	M5-200SA8	M5-21	272	M5-265	M5-46	297
M5-151SA6	M5-42	293	M5-201A	M5-29	280	M5-266	M5-46	297
M5-151SA8	M5-42	293	M5-203A	M5-26	277	M5-269	M5-46	297
M5-152A	M5-41	292	M5-204A	M5-09	259	M5-27A	M5-43	294
M5-153A	M5-43	294	M5-205A	M5-10	261	M5-270	M5-46	297
M5-154A	M5-01	251 , 252	M5-206A	M5-05	256	M5-274A	M5-03	254
M5-156A	M5-02	253	M5-207A	M5-19	270	M5-28A	M5-04	255
M5-157A	M5-02	253	M5-208A	M5-23	274	M5-280A	M5-40	291
M5-158A	M5-48	299	M5-209A	M5-23	274	M5-29A	M5-41	292
M5-159A	M5-13	264	M5-210A	M5-10	261	M5-292A	M5-35	286
M5-160A	M5-49	300	M5-211A	M5-02	253	M5-30A	M5-04	255
M5-161A	M5-02	253	M5-214A	M5-33	284	M5-329A	M5-36	287
M5-162A	M5-48	299	M5-215A	M5-32	283	M5-33A	M5-14	265
M5-163A	M5-02	253	M5-216A	M5-08	259	M5-35A	M5-06	257
M5-164A	M5-45	296	M5-217A	M5-25	276	M5-42A	M5-04	255
M5-165A	M5-50	301	M5-218A	M5-05	256	M5-44A	M5-14	265
M5-166A	M5-48	299	M5-222A	M5-05	256	M5-47A	M5-06	257
M5-167A	M5-45	296	M5-223A	M5-10	261	M5-48A	M5-41	292
M5-169A	M5-30	281	M5-224A	M5-28	279	M5-50A	M5-04	255
M5-170A	M-04	397	M5-225	M5-24	275	M5-508	M-01	394
M5-172A	M5-30	281	M5-225A	M5-24	275	M5-509	M-02	395
M5-173A	M5-10	261	M5-226A	M5-22	273	M5-515	M-03	396
M5-174A	M5-10	261	M5-227A	M5-13	264	M5-61A	M5-01	251 , 252
M5-177A	M5-02	253	M5-228A	M5-10	261	M5-63A	M5-41	292
M5-178A	M5-14	265	M5-230A	M5-11	262	M5-67A	M5-15	266
M5-179A	M5-44	295	M5-232A	M5-02	253	M5-701A	M5-17	268
M5-180A	M-06	399	M5-233A	M5-27	278	M5-74A	M5-01	251 , 252
M5-181A	M5-29	280	M5-234A	M5-47	298	M5-742A	M-04	397
M5-182A	M5-41	292	M5-237A	M5-34	285	M5-762	M-05	398

Tester Manual Index

Part #	Product Group #	Page #
M5-763A	M-06	399
M5-764A	M-06	399
M5-76A	M5-17	268
M5-768	M-07	402
M5-79A	M5-01	251 , 252
M5-92A	M5-43	294
M5-93A	M5-43	294
M5-94A	M5-01	251 , 252
MP291	PAL-01	180
MP293	PAL-01	180
MP417	PAL-02	181
MP419	PAL-03	182
N9013	N-02	304
N9014	N-03	305
N9015	N-02	304
NA2-101	N-01	303
NA2-102	N-01	303
NA2-103	N-01	303
NA2-110	N-10	312
NA2-111	N-10	312
P8-328	P8-01	363
P8-328A	P8-01	363
P8-343	P8-02	364
P8-343A	P8-02	364
P8-352	P8-03	365
P8-352A	P8-03	365
P8-354	P8-03	365
P8-354A	P8-03	365
P8-355	P8-03	365
P8-355A	P8-03	365
P8-357	P8-03	365
P8-357A	P8-03	365
P8-368	P8-04	366
P8-368A	P8-04	366
P8-379	P8-01	363
P8-379A	P8-01	363
P8-393	P8-04	366
P8-393A	P8-04	366
P8-403	P8-02	364
P8-403A	P8-02	364
P8-404	P8-02	364
P8-404A	P8-02	364
P8-405	P8-04	366
P8-405A	P8-04	366
P8-406	P8-01	363
P8-406A	P8-01	363
P8-407	P8-01	363
P8-407A	P8-01	363
P8-410	P8-02	364
P8-410A	P8-02	364
TRI100	TRI-01	374
TRI10DN	TRI-08	379
TRI110	TRI-01	374
TRI219	TRI-05	377
TRI220	TRI-05	377
TRI221	TRI-05	377
TRI222	TRI-05	377
TRI224	TRI-05	377
TRI225	TRI-05	377
TRI226	TRI-05	377
TRI227	TRI-05	377
TRI232	TRI-21	392
TRI233	TRI-14	385
TRI247	TRI-10	381
TRI248	TRI-11	382
TRI250	TRI-06	378
TRI251	TRI-06	378
TRI252	TRI-06	378
TRI253	TRI-06	378
TRI254	TRI-06	378
TRI255	TRI-06	378
TRI257	TRI-20	391
TRI267	TRI-15	386
TRI268	TRI-09	380
TRI270	TRI-09	380
TRI271	TRI-19	390
TRI273	TRI-16	387
TRI275	TRI-12	383
TRI276	TRI-19	390
TRI278	TRI-13	384
TRI283	TRI-18	389
TRI285	TRI-12	383
TRI300E	TRI-02	375
TRI400R	TRI-02	375
TRI400S	TRI-02	375
TRI405	TRI-02	375
TRI406	TRI-02	375
TRI410	TRI-02	375
TRI420	TRI-02	375
TRI421	TRI-02	375
TRI422	TRI-03	376
TRI423	TRI-17	388
TRI430	TRI-03	376
TRI835	TRI-16	387
TRI836	TRI-19	390
TRI837	TRI-19	390
TRI839	TRI-16	387
TRI845	TRI-22	393

REGULATOR'S DIAGRAMS

Part #	DIA. #	Page #
IN219	IN-19	332-A
IN220	IN-29	341-A
IN221	IN-19	332-A
IN222	IN-19	332-A
IN224	IN-19	332-A
IN225	IN-19	332-A
IN226	IN-29	341-A
IN227	IN-19	332-A
IN250	IN-29	341-A
IN251	IN-19	332-A
IN252	IN-19	332-A
IN253	IN-19	332-A
IN254	IN-19	332-A
IN255	IN-19	332-A
IN256	IN-29	341-A
IN429	IN-19	332-A
IN431	IN-19	332-A
IN434	IN-29	341-A
IN435	IN-19	332-A
IN436	IN-29	341-A
IN437	IN-29	341-A
IN438	IN-29	341-A
IN439	IN-29	341-A
IN444	IN-29	341-A
IN774	IN-29	341-A
TRI-219	TRI-07	378-A
TRI-220	TRI-07	378-A

Tester Manual Index

REGULATOR'S DIAGRAMS			REGULATOR'S DIAGRAMS			REGULATOR'S DIAGRAMS		
Part #	Product Group #	Page #	Part #	Product Group #	Page #	Part #	Product Group #	Page #
TRI-221	TRI-07	378-A	TRI-251	TRI-07	378-A	TRI-406	TRI-04	376-A
TRI-222	TRI-07	378-A	TRI-252	TRI-07	380-A	TRI-410	TRI-04	376-A
TRI-224	TRI-07	378-A	TRI-253	TRI-07	378-A	TRI-420	TRI-04	376-A
TRI-225	TRI-07	378-A	TRI-254	TRI-07	378-A	TRI-421	TRI-04	376-A
TRI-226	TRI-07	378-A	TRI-255	TRI-07	378-A	TRI-422	TRI-04	376-A
TRI-227	TRI-07	378-A	TRI-400	TRI-04	376-A	TRI-430	TRI-04	376-A
TRI-250	TRI-07	378-A	TRI-405	TRI-04	376-A			