prestolite®

SERVICE PARTS LIST

ERH-4000 SERIES

MOTORS

ISSUED: 1-23-87 (Rev.)

ORIG.EQUIP.MOTOR ENG. NUMBER		SERVICE MOTOR ENG. NUMBER	SALES NUMBER	APPLICATION
ERH-4007		ERH-4007	40-65	Burr Engineering
ERH-4009S	USE	ERH-4015	40-362	Lincoln Cont.,Thunderbird Conv.
ERH-4010BS		ERH-4010BS	40-292A	Aero Comander,Cessna Aircraft, Beech Aircraft,Rockwell Int'l.
ERH-4011S		ERH-4011S	40-265A	Piper Aircraft
ERH-4011S-1		ERH-4011S-1	40-370A	Piper Aircraft
ERH-4012		ERH-4012	40-280	Burr Engineering
ERH-4012A		ERH-4012A	40-293	Burr Engineering
ERH-4013S		ERH-4013S	40-351A	Mercury Marine
ERH-4015		ERH-4015	40-362	Dura(Bricklin Auto)
ERH-4017S		ERH-4017S	40-380	Mercury Marine,Chrysler Outboard, Clark Equipment
ERH-4018S		ERH-4018S	40-387	Volvo-Penta (Marine)
ERH-4019AS		ERH-4019AS	40-412	Kiekhaefer Aeromarine
ERH-4019S		ERH-4019S	40-389	BMW (Marine)
ERH-4101S	USE	ERH-4102S	40-413	Mercury Marine,Marine Dr.System
ERH-4102S		ERH-4102S	40-413	Mercury Marine
ERH-4103AS		ERH-4103AS	40-493	Warner Gear
ERH-4104S		ERH-4104S	40-434	Volvo-Penta(Marine)
ERH-4105S		ERH-4105S	40-440	Mercury Marine
ERH-4106S		ERH-4106S	40-521	BMW (Marine)

NOTE: SEE PARTS LIST FOR MOTOR BEING SERVICED WHEN COMPONENT PARTS ARE REQUIRED.

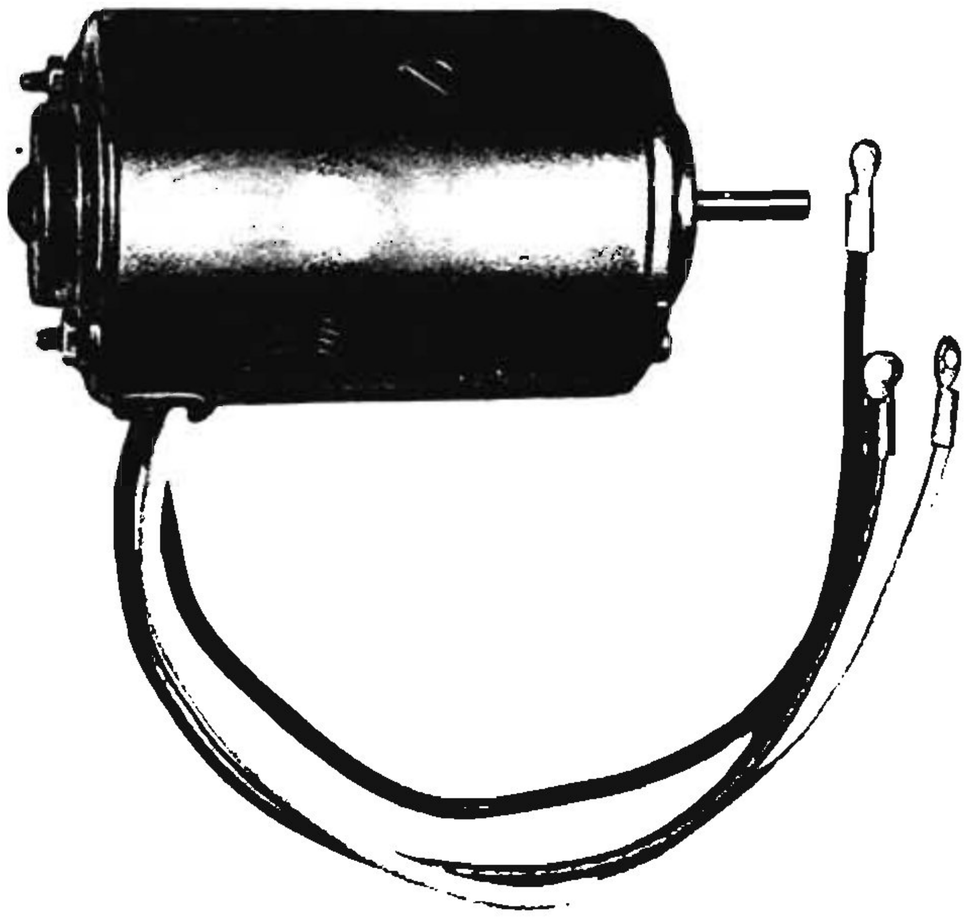

ERH-4000 Series Motor Parts List

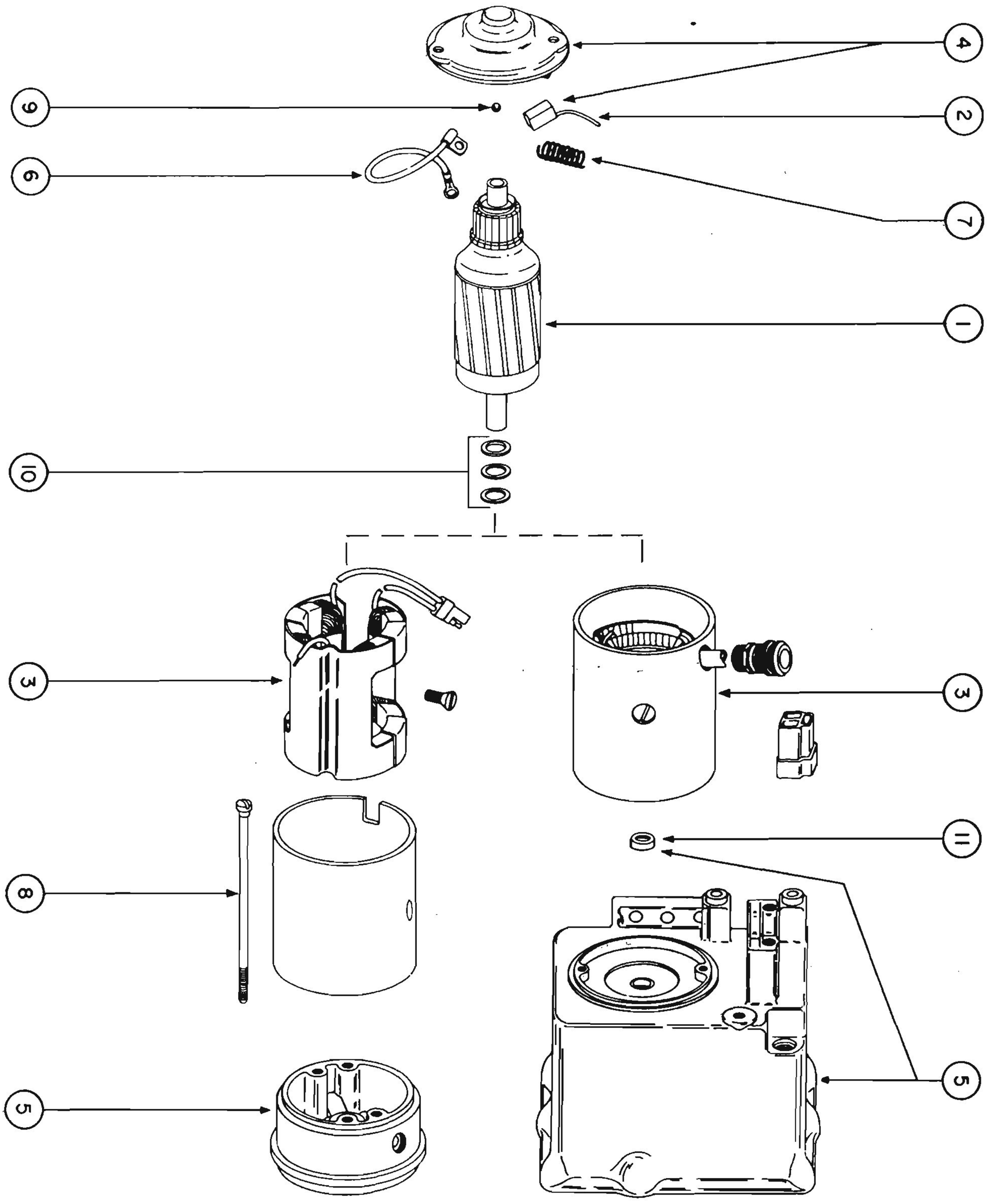

Exploded View of Typical ERH Motor

Assembly	Armature (1)	Brush Set (2)	Frame & Field or Field Coil Pkg. (3)	Comm. End Head Assembly (4)	Drive End or Reservoir (5)	Lead Assembly (6)	Brush Spring Set (7)
ERH-4007 (40-65)	41-54 (ERH-2306)	42-32 (ESQ-12S)	40-80[c] (ERH-1405)	40-271[d] (EWF-2102A)	39-155 (EWG-1030B)	26-132 (ERH-35B)	50-136 (EWM-18S)
ERH-4009S (40-236)	41-55 (ERH-2406)	"	44-44[c] (ERH-120ECS)	40-275 (ERH-2102)	40-237 (ERH-1047A)	26-174 (ESQ-23)	"
ERH-4010BS (40-292A)	41-130 (ERH-2506B)	"	40-418 (ERH-2501CS)	40-242 (ERH-2202)	40-241 (ERH-1003)	26-227 (ETH-31A)	50-270 (EPG-18S)
ERH-4011S (40-265A)	"	"	40-453 (ERH-260[illegible]S)	"	"	26-251 (ERH-42)	"
ERH-4011S-1 (40-370A)	"	"	"	"	"	"	"
ERH-4012 (40-280)	41-54 (ERH-2306)	"	40-44[illegible][c] (ERH-1705-S)	40-81 (EWF-2102)	39-165 (EWG-1030B)	[NR]	50-136 (EWM-18S)
ERH-4012A (40-293)	"	"	"	40-294 (ERH-2402)	39-462 (ERH-1147)	[NR]	"
ERH-4013S (40-351A)	41-130 (ERH-2506B)	"	40-353 (ERH-2501B)	40-242 (ERH-2202)	40-352 (ERH-1003A)	26-227 (ETH-31A)	50-270 (EPG-18S)
ERH-4015 (40-362)	41-128 (ERH-2126)	"	40-443[c] (ERH-1205BS)	"	40-237 (ERH-1047A)	26-174 (ESQ-23)	50-136 (EWM-18S)
ERH-4017S (40-380)	41-130 (ERH-2506B)	"	40-418 (ERH-2501CS)	"	40-241 (ERH-1003)	26-335 (ERH-31)	50-270 (EPG-18S)
ERH-4018S[a] (40-387)	41-130[b] (ERH-2506B)	"	40-388[b] (ERH-2501D)	40-242[b] (ERH-2202)	40-241[b] (ERH-1003)	26-336 (ETH-31B)	"
ERH-4019AS[a] (40-412)	"	"	40-390[b] (ERH-2501E)	"	"	26-335 (ERH-31)	"
ERH-4019S[a] (40-389)	"	"	"	"	"	26-337 (ERH-31A)	"
ERH-4101S[a] (40-405)	41-134[b] (ERH-2136)	"	40-418[b] (ERH-2501CS)	"	40-514 (ERH-1123BS)	26-335 (ERH-31)	"
ERH-4102S[a] (40-413)	"	42-54 (EVF-1012BS)	40-415[b] (ERH-2131)	40-414[b] (ERH-2202BSS)	"	"	"
ERH-4103AS[a] (40-493)	"	"	40-494[b] (ERH-2131B)	"	"	26-355 (ERH-31B)	"
ERH-4104S[a] (40-434)	"	"	40-435[b] (ERH-2131B)	"	"	26-336 (ETH-31B)	"
ERH-4105S (40-440)	"	"	40-441 (ERH-2131C)	"	"	26-335 (ERH-31)	"
ERH-4106S [a] (40-521)	"	"	40-390 [b] (ERH-2501E)	"	"	26-337 (ERH-31A)	"

[a] Conforms to SAE J1171 External Ignition Protection of Marine Electrical Devices.
[b] These parts are essential to continuing External Ignition Protection.
Use only Genuine Prestolite Service Parts for replacement.
Do not alter or substitute.
[c] Field Coil Assy. only.
[d] Includes Lead Assembly.
[NR] Not required.

ERH-4000 SERIES

Assembly	Thru Bolt Package (8)	Steel Ball (9)	Washer & Spacer Package (10)	Seal Package (11)
ERH-4007 (40-65)	43-345 (EWV-20S)	[NR]	90-479	[NR]
ERH-4009S (40-236)	43-335 (EMJ-20S)	43-414 (104986)	"	[NR]
ERH-4010BS (40-292A)	43-355 (EMJ-20BS)	"	"	43-401[e] (XA-1488S)
ERH-4011S (40-265)	"	"	43-397 (EWR-81S)	"
ERH-4011S-1 (40-370A)	"	"	"	"
ERH-4012 (40-280)	43-345 (EWV-20S)	[NR]	90-479	[NR]
ERH-4012A (40-293)	43-346 (EMJ-20AS)	[NR]	"	[NR]
ERH-4013S (40-351A)	43-355 (EMJ-20BS)	43-414 (104986)	"	43-401[e] (XA-1488S)
ERH-4015 (40-362)	43-335 (EMJ-20S)	"	"	[NR]
ERH-4017S (40-380)	43-355 (EMJ-20BS)	"	"	43-401[e] (XA-1488S)
ERH-4018S[a] (40-387)	43-355[b] (EMJ-20BS)	"	43-398 (EWD-45S)	43-401[b][e] (XA-1488S)
ERH-4019AS[a] (40-412)	"	"	"	"
ERH-4019S[a] (40-389)	"	"	"	"
ERH-4101S[a] (40-405)	[b] [f]	43-391 (104160)	90-479	"
ERH-4102S[a] (40-413)	"	"	"	"
ERH-4103AS[a] (40-493)	"	"	"	"
ERH-4104S[a] (40-434)	"	"	"	"
ERH-4105S (40-440)	"	"	"	"
ERH-4106S[a] (40-521)	43-413[b] (ERH-21BS)	43-414 (104986)		

[NR] Not required.

[a] Conforms to SAE J1171 External Ignition Protection of Marine Electrical Devices.
[b] These parts are essential to continuing External Ignition Protection.
Use only Genuine Prestolite Service Parts for replacement.
Do not alter or substitute.
[e] .75" O.D.(5Pcs.). Note: New Seal cannot be used to service early design units that have captive O-Rings.

[f] For Flat Hd. 5.25" long use 43-400(ERH-21S), for Hex. Hd. 4.65" long use 43-413(ERH-21BS).

TEMPORARY PARTS LIST

prestolite

SERVICE PARTS LIST

ASSY. NO. ERH-4106S [a]
40-521

SALES NO. _____

MOTOR & RESERVOIR ASSY.

ISSUED 10/8/86

Application BMW (Marine)

Service Part No.	No. Used	Part Description	Prestolite Sales No.
ERH-2136 [b]	1	ARMATURE ASSY.	41-134
104986	1	BALL, THRUST	43-414
ERH-2501E [b]	1	FRAME & FIELD ASSY.	40-390
ERH-2202B [b]	1	HEAD ASSY. COMM. END	40-414
ESQ-12S	1	BRUSH SET, SERVICE	42-32
ERH-31A	1	LEAD ASSY., GROUND	26-337
ERH-1123B [b]	1	RESERVOIR & BRACKET ASSY.	40-514
XA-1488S [b]	1	SEAL PKG. (5 PCS.)	43-401
90-2854	1	BEARING & RETAINER PKG.	90-2854
EPG-18S	1	SPRING SET, BRUSH	50-270
ERH-21BS [b]	1	THRU BOLT PKG.	43-413
90-479	1	THRUST WASHER & SPACER PKG.	90-479
	*	Spacer	
	*	Washer, Thrust	

* Use as required.

[a] Conforms to SAE J1171 External Ignition protection of Marine Electrical Devices.

[b] These parts are essential to continuing External Ignition protection. Use only Genuine Prestolite Service parts for replacement. Do not alter or substitute.

File in the → WIPERS & SMALL