prestolite®

SERVICE PARTS LIST

GGW-4801E TO 6022S

GENERATORS

ISSUED: 1-10-73

ORIG.EQUIP.GEN. ENG. NUMBER		SERVICE GEN. ENG. NUMBER	SALES NUMBER	APPLICATION
GGW-4801E	USE	GGW-7405S	45-761	West Coast Mach.Inc.
GGW-4801F	USE	GGW-7405S	45-761	Hercules
GGW-4801S	USE	GGW-7405S	45-761	Towmotor
GGW-6001A	USE	GGW-7405S	45-761	Chrysler M & I
GGW-6001AB	USE	GGW-7405S	45-761	Chrysler M & I
GGW-6001AT	USE	GGW-6001T-S1	45-73	Chrysler M & I
GGW-6001AT-1		GGW-6001AT-1	45-72	Chrysler M & I
GGW-6001Q	USE	GGW-7405S	45-761	Chrysler M & I
GGW-6001S	USE	GGW-7405S	45-761	Hercules
GGW-6001S-1	USE	GGW-7405S	45-761	Chrysler M & I
GGW-6001T-S1		GGW-6001T-S1	45-73	Chrysler M & I
GGW-6001V	USE	GGW-7405S	45-761	Continental
GGW-6001W	USE	GGW-7405S	45-761	Continental
GGW-6001X	USE	GGW-7405S	45-761	Winpower
GGW-6001Y	USE	GGW-7405S	45-761	Eaton
GGW-6014A-1		GGW-6014A-1	45-273	Hyster
GGW-6014S-1		GGW-6014S-1	45-74	Eaton
GGW-6022S		GGW-6022S	45-75	Eaton

GGW-4801E to 6022S Generator Parts List

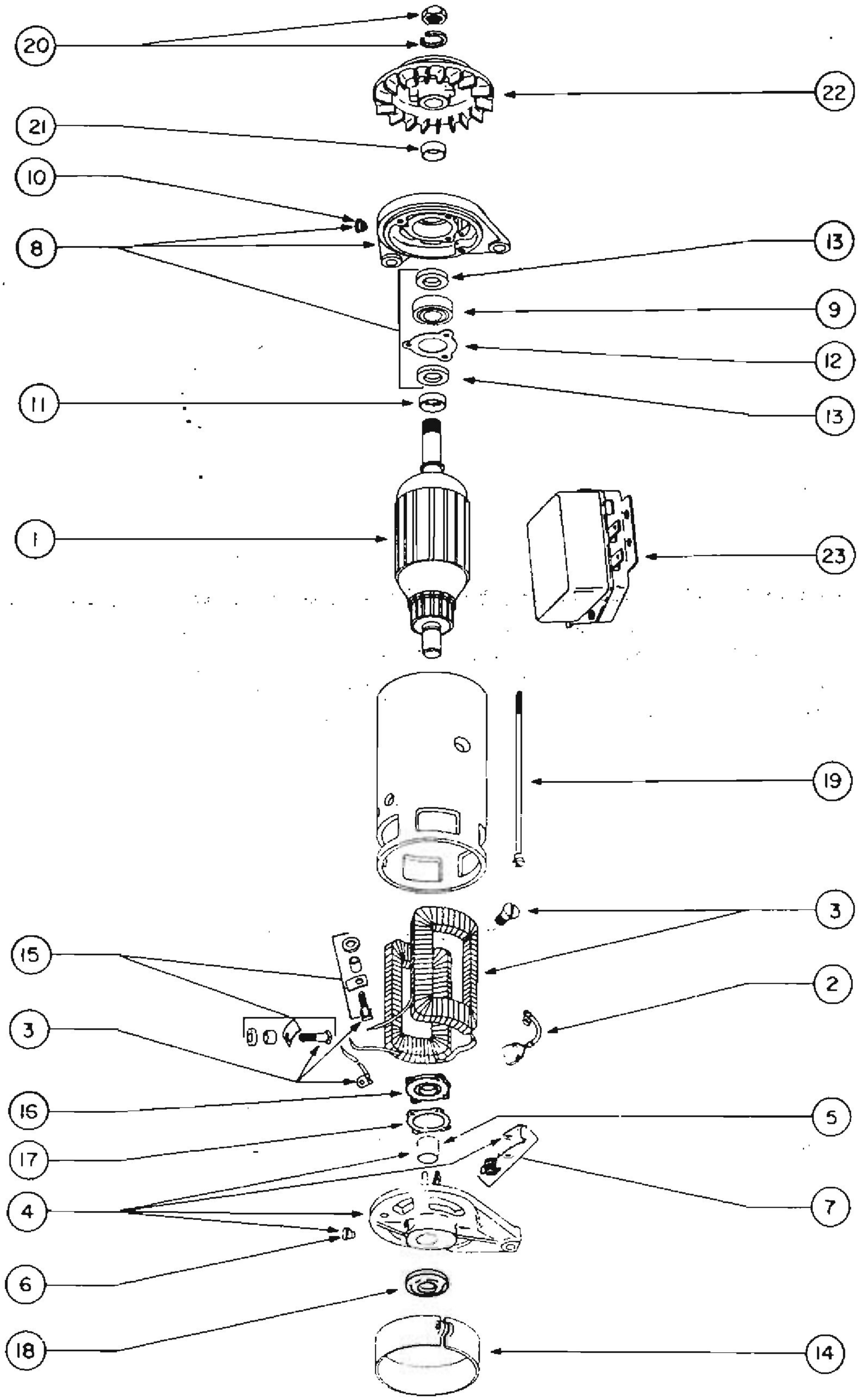

Exploded View of Typical GGW Generator

Assembly	Armature (1)	Brush Set (2)	Field Coil Assembly (3)	Comm.End Head Assembly (4)	C.E. Bearing (5)	C.E. Oiler (6)	Brush Arm & Spring Package (7)
GGW-4801E - - - -	10-38 (GGW-2006F)	11-29 (GGY-2012BS)	13-14 (GGW-1005)	12-18 (GGW-2002S)	24-5 (GGU-38A)	35-1 (8X-489)	90-255
GGW-4801F - - - -	"	"	"	"	"	"	"
GGW-4801S (45-13)	"	"	"	"	"	"	"
GGW-6001A - - - -	"	11-27 (GGU-2012S)	"	"	"	"	"
GGW-6001AB - - - -	"	"	"	"	"	"	"
GGW-6001AT - - - -	10-208 (GGW-2006FT)	11-26 (GGU-2012AS)	60-86[a] (GGW-2001AS)	12-112 (GGW-2002AS)	"	35-90 (X-3931)	90-256
GGW-6001AT-1 (45-72)	"	"	60-70[a] (GGW-2001AS-1)	"	"	"	"
GGW-6001Q - - - -	10-38. (GGW-2006F)	11-27 (GGU-2012S)	13-14 (GGW-1005)	12-18 (GGW-2002S)	"	35-1 (8X-489)	90-255
GGW-6001S (45-14)	"	"	"	"	"	"	"
GGW-6001S-1 (45-15)	"	"	"	"	"	"	"
GGW-6001T-S1 (45-73)	10-208 (GGW-2006FT)	11-26 (GGU-2012AS)	60-86[a] (GGW-2001AS)	12-112 (GGW-2002AS)	"	35-90 (X-3931)	90-256
GGW-6001V - - - -	10-38 (GGW-2006F)	11-27 (GGU-2012S)	13-14 (GGW-1005)	12-18 (GGW-2002S)	"	35-1 (8X-489)	90-255
GGW-6001W - - - -	"	"	"	"	"	"	"
GGW-6001X - - - -	"	"	"	"	"	"	"
GGW-6001Y - - - -	"	"	"	"	"	"	"
GGW-6014A-1 (45-273)	10-40 (GGW-2045F)	"	"	12-20 (GGW-2039S)	25-11 (X-3135)	"	"
GGW-6014S-1 (45-74)	"	"	"	"	"	"	"
GGW-6022S (45-75)	"	"	"	12-88 (GGW-2116S)	"	"	"

[a] Frame & Field Assembly Complete.

GGW-4801E TO 6022S GENERATOR PARTS LIST

Assembly	Drive End Head Assembly (8)	D.E. Bearing (9)	D.E. Oiler (10)	Felt Washer Retainer (11)	D.E. Gasket (12)	Felt Washer (13)	Cover Band (14)	Terminal Stud Package (15)
GGW-4801E - - - -	14-47 (GJC-1003)	25-6 (X-295)	35-1 (8X-489)	35-29 (GR-32)	35-217 (GEE-27)	35-21 (GG-164)	35-236 (GGW-1024)	90-336
GGW-4801F - - - -	"	"	"	"	"	"	"	"
GGW-4801S (45-13)	"	"	"	"	"	"	"	"
GGW-6001A - - - -	"	"	"	"	"	"	"	"
GGW-6001AB - - - -	"	"	"	"	"	"	"	"
GGW-6001AT - - - -	14-121 (GJC-1003B)	"	35-90 (X-3931)	35-365 (GR-328)	"	"	35-463 (GGW-1024B)	- - - -
GGW-6001AT-1 (45-72)	"	"	"	"	"	"	"	- - - -
GGW-6001Q - - - -	14-47 (GJC-1003)	"	35-1 (8X-489)	35-29 (GR-32)	"	"	35-236 (GGW-1024)	90-336
GGW-6001S (45-14)	"	"	"	"	"	"	"	"
GGW-6001S-1 (45-15)	"	"	"	"	"	"	"	"
GGW-6001T-S1 (45-73)	14-121 (GJC-1003B)	"	35-90 (X-3931)	35-365 (GR-328)	"	"	35-463 (GGW-1024B)	- - - -
GGW-6001V - - - -	14-47 (GJC-1003)	"	35-1 (8X-489)	35-29 (GR-32)	"	"	35-236 (GGW-1024)	90-336
GGW-6001W - - - -	"	"	"	"	"	"	"	"
GGW-6001X - - - -	"	"	"	"	"	"	"	"
GGW-6001Y - - - -	"	"	"	"	"	"	"	"
GGW-6014A-1 (45-273)	14-24 (GJC-1082)	25-8 (X-298)	"	- - - -	35-226 (GGF-11)	- - - -	"	"
GGW-6014S-1 (45-74)	"	"	"	- - - -	"	- - - -	"	"
GGW-6022S (45-75)	14-201 (GJC-1069)	"	"	- - - -	"	- - - -	35-476 (GAL-1024M)	"

Assembly	Bearing Retainer Assembly (16)	Bearing Retainer Gasket (17)	Outer Retainer (18)	Thru Bolt Package (19)	Nut & Washer Package (20)	Armature Shaft Spacer (21)	Drive Pulley (22)	Regulator (23)
GGW-4801E	- - - -	- - - -	- - - -	36-554 (GK-20S)	90-33	- - - -	34-118 (PU-1001A)	8-762 (VBO-4602U)
GGW-4801F	- - - -	- - - -	- - - -	"	"	- - - -	34-113 (PU-1563)	"
GGW-4801S (45-13)	- - - -	- - - -	- - - -	"	"	- - - -	- - - -	"
GGW-6001A	- - - -	- - - -	- - - -	"	"	- - - -	34-110 (SP-1936)	"
GGW-6001AB	- - - -	- - - -	- - - -	"	"	- - - -	34-111 (PU-1227)	"
GGW-6001AT	- - - -	- - - -	- - - -	35-457 (GK-20CS)	90-130	- - - -	34-203 (SP-1936A)	8-200 (VBO-4602BT)
GGW-6001AT-1 (45-72)	- - - -	- - - -	- - - -	"	"	- - - -	"	"
GGW-6001Q	- - - -	- - - -	- - - -	36-554 (GK-20S)	90-33	- - - -	34-175 (PU-1073)	8-762 (VBO-4602U)
GGW-6001S (45-14)	- - - -	- - - -	- - - -	"	"	35-31 (GEG-55)	- - - -	"
GGW-6001S-1 (45-15)	- - - -	- - - -	- - - -		"	"	- - - -	"
GGW-6001T-S1 (45-73)	- - - -	- - - -	- - - -	35-457 (GK-20CS)	90-130	35-462 (GEG-55A)	- - - -	8-200 (VBO-4602BT)
GGW-6001V	- - - -	- - - -	- - - -	36-554 (GK-20S)	90-33	35-31 (GEG-55)	34-192 (SP-963)	8-761 (VBO-4602R)
GGW-6001W	- - - -	- - - -	- - - -	"	"	- - - -	34-110 (SP-1936)	"
GGW-6001X	- - - -	- - - -	- - - -	"	"	- - - -	34-172 (PU-1004)	8-762 (VBO-4602U)
GGW-6001Y	- - - -	- - - -	- - - -			35-31 (GEG-55)	34-164 (PU-83A)	8-761 (VBO-4602R)
GGW-6014A-1 (45-273)	35-416 (GGU-1050)	35-232 (GGU-53)	35-477 (GGW-19)		"	- - - -	34-331 (PU-1139)	8-762 (VBO-4602U)
GGW-6014S-1 (45-74)	"	"	"		"	35-52 (GGW-40)	- - - -	"
GGW-6022S (45-75)	"	"	"	"	"	"	- - - -	8-72 (VBO-4601U)

prestolite®

SERVICE PARTS LIST

GGW-7102S TO 7407S

GENERATOR

ISSUED: 7-27-77(Rev.)

ORIG. EQUIPMENT ENG. NUMBER		SERVICE GENERATOR ENG. NUMBER	SALES NUMBER	VOLTS: 6 APPLICATION
GGW-7102S		GGW-7102S	45-762	Universal Service
GGW-7103A		GGW-7103A	- - - -	Ford Motor
GGW-7103S-1		GGW-7103S-1	- - - -	Ford Motor
GGW-7402A	USE	GGW-7405S	45-761	Chrysler Industrial
GGW-7402A1	USE	GGW-7405S	45-761	Teledyne Continental
GGW-7402S-1	USE	GGW-7405S	45-761	Chrysler Industrial
GGW-7404A	USE	GGW-7404S	45-42	Jeep Corporation
GGW-7404B	USE	GGW-7404S	45-42	Jeep Corporation
GGW-7404S		GGW-7404S	45-42	Redevco, Service
GGW-7405S		GGW-7405S	45-761	Universal Service
GGW-7406S		GGW-7406S	45-764	Mars Industrial, Service
GGW-7407A	USE	GGW-7407S	45-237	Thermo-King
GGW-7407S		GGW-7407S	45-237	Service

NOTE: SEE TABLE FOR GENERATOR BEING SERVICED WHEN PARTS ARE REQUIRED.

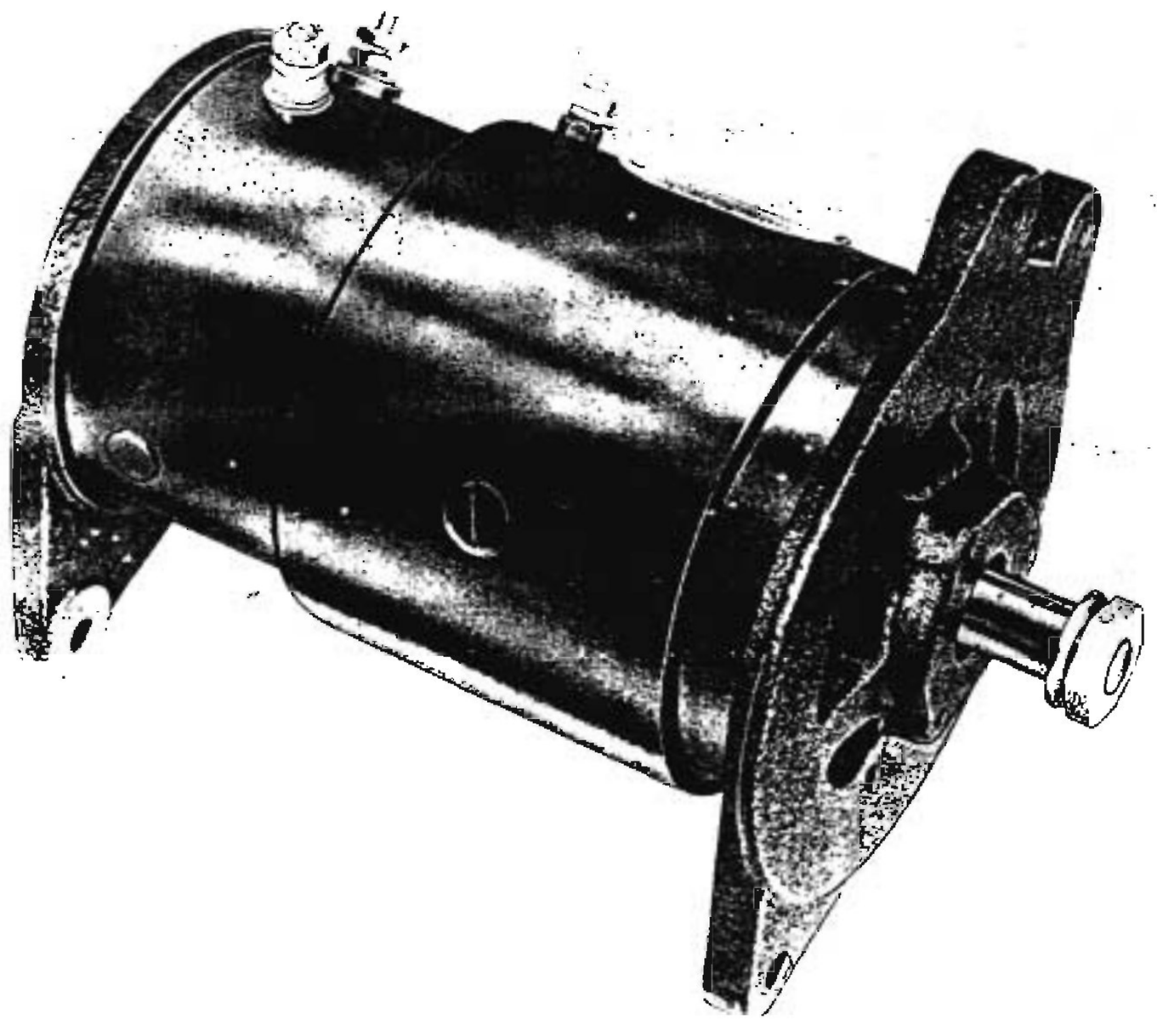

Printed in U.S.A.

File in the
OE-92 PARTS BINDER

GENERATOR SECTION

GGW-7102S to 7407S Generator Parts List

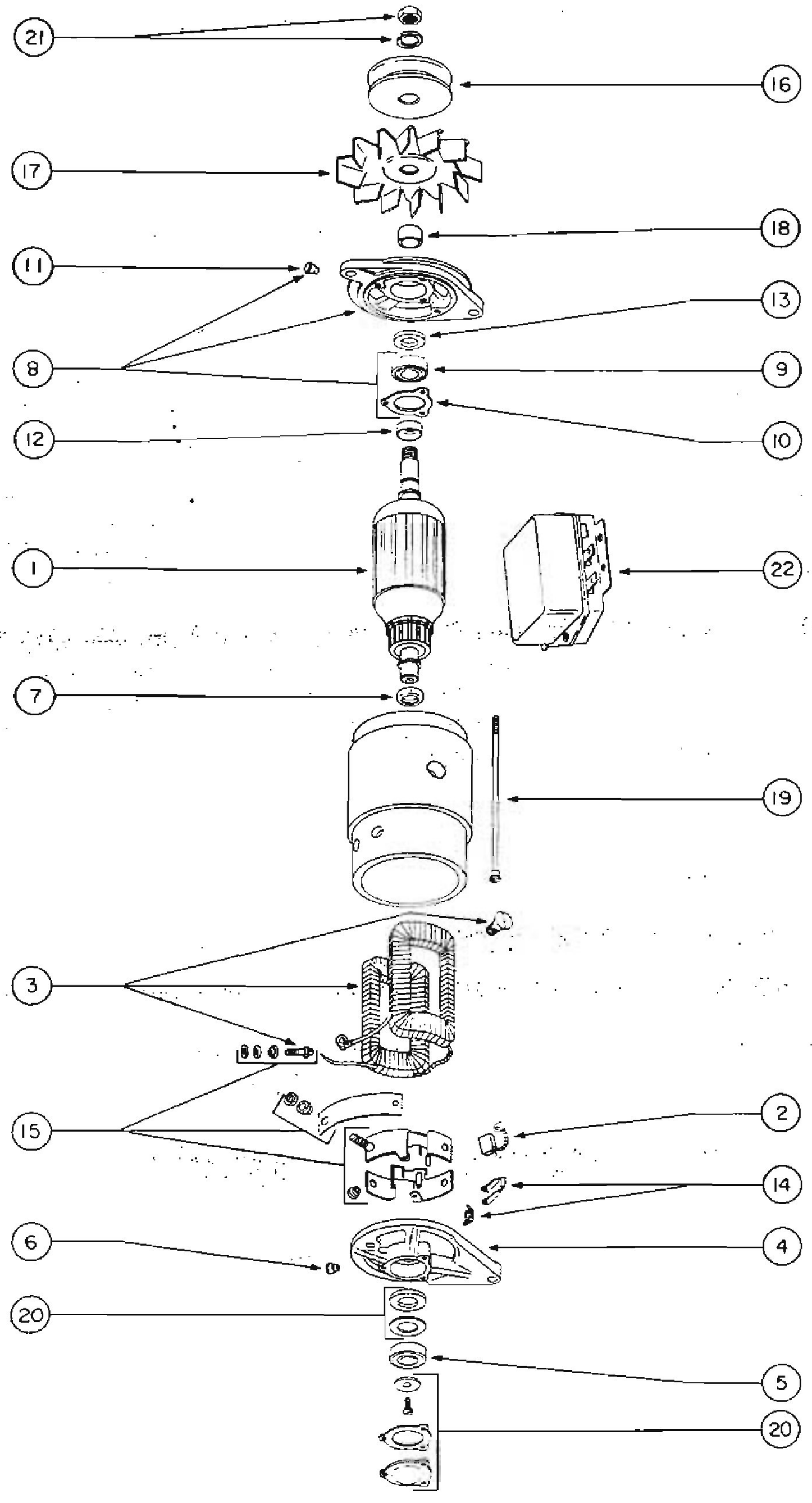

Exploded View of Typical GGW Generator

Assembly	Armature (1)	Brush Set (2)	Field Coil Assembly (3)	Comm. End Head Assembly (4)	Comm. End Bearing (5)	Comm. End Oiler (6)	Comm. End Retainer (7)
GGW-7102S (45-762)	10-92 (GGW-2096FS)	11-15 (GJC-2012AS)	13-33 (GGW-1005E)	12-52 (GJC-1094)	- - - -	- - - -	- - - -
GGW-7103A [PB]	10-315 (GGW-2096F)	"	"	[PB]	25-24 (X-3433)	- - - -	- - - -
GGW-7103S-1 [PB]	"	"	"	[PB]	"	- - - -	- - - -
GGW-7402A - - - -	10-76 (GGW-2030F)	"	13-37 (GGW-1005G)	12-37 (GJP-2044)	24-9 (GJC-38A)	35-45 (8X-3279)	- - - -
GGW-7402A-1 - - - -	"	"	"	"	"	"	- - - -
GGW-7402S-1 (45-299)	"	"	"	"	"	"	- - - -
GGW-7404A - - - -	"	"	"	"	"	"	- - - -
GGW-7404B - - - -	"	"	"	"	"	"	- - - -
GGW-7404S (45-42)	"	"	"	"	"	"	- - - -
GGW-7405S (45-761)	"	"	"	"	"	"	- - - -
GGW-7406S (45-764)	"	"	"	12-48 (GJP-2045)	"	"	- - - -
GGW-7407A - - - -	10-211 (GGW-2113F)	"	"	12-39 (GJC-1050)	25-6 (X-295)	35-1 (8X-489)	35-29 (GR-32)
GGW-7407S (45-237)	"	"	"	"	"	"	"

[PB] Private Brand Part - not available through Prestolite.

GGW-7102S TO 7407S

Assembly	Drive End Head Assembly (8)	Drive End Bearing (9)	Drive End Gasket Package (10)	Drive End Oiler (11)	Drive End Retainer (12)	Felt Washer (13)	Brush Arm & Spring Package (14)	Terminal Stud Package (15)
GGW-7102S (45-762)	14-57 (GJC-1095)	25-21 (X-3380)	35-217 (GEE-27)	- - - -	35-29 (GR-32)	- - - -	90-32	90-579
GGW-7103A [PB]	[PB]	25-1 (X-3416)	35-217A (GEE-27S)	- - - -	"	- - - -	"	"
GGW-7103S-1 [PB]	[PB]	"	"	- - - -	"	- - - -	"	"
GGW-7402A - - - -	14-40 (GJP-1102)	25-6 (X-295)	"	35-1 (8X-489)	"	35-21 (GG-164)	"	"
GGW-7402A-1 - - - -	"	"	"	"	"	"	"	"
GGW-7402S-1 (45-299)	"	"	"	"	"	"	"	"
GGW-7404A - - - -	"	"	"	"	"	"	"	"
GGW-7404B - - - -	"	"	"	"	"	"	"	"
GGW-7404S (45-42)	"	"	"	"	"	"	"	"
GGW-7405S (45-761)	14-39 (GJC-11118)	"	"	"	"	"	"	"
GGW-7406S (45-764)	14-55 (GJP-1102F)	"	"	"	"	"	"	90-779
GGW-7407A - - - -	14-40 (GJP-1102)	"	"	"	"	"	"	90-579
GGW-7407S (45-237)	"	"	"	"	"	"	"	"

[PB] Private Brand Part - not available through Prestolite.

SHEET 3 ISSUED: 7-27-77 (REV.)

Assembly	Drive Pulley (16)	Vent Fan (17)	Armature Shaft Spacer (18)	Thru Bolt Package (19)	Comm. End Cover Package (20)	Nut & Washer Package (21)	Regulator (22)
GGW-7102S (45-762)	- - - -	- - - -	- - - -	35-426 (GY-20S)	- - - -	90-33	8-661 (V80-6611D)
GGW-7103A [PB]	[PB]	- - - -	35-78S (GJC-115)	35-426 (GY-20S)	- - - -	"	- - - -
GGW-7103S-1 [PB]	- - - -	- - - -	- - - -	"	- - - -	"	- - - -
GGW-7402A - - - -	34-11D (SP-1936)	- - - -	- - - -	"	- - - -	"	8-762 (V80-4602U)
GGW-7402A-1 - - - -	"	- - - -	- - - -	"	- - - -	"	"
GGW-7402S-1 (45-299)	- - - -	- - - -	35-31 (GEG-55)	"	- - - -	"	
GGW-7404A - - - -	34-119 (SP-1986B)	- - - -	- - - -	"	- - - -	"	"
GGW-7404B - - - -	34-118 (PU-1001A)	- - - -	- - - -	"	- - - -	"	"
GGW-7404S (45-42)	- - - -	- - - -	- - - -	"	- - - -	"	"
GGW-7405S (45-761)	- - - -	- - - -	- - - -	"	- - - -	"	"
GGW-7406S (45-764)	- - - -	- - - -	35-33 (GEG-55)	"	- - - -	"	8-261 (V80-4623D)
GGW-7407A - - - -	34-76 (PU-549)	34-112 (PU-217)	35-33 (PU-218)	"	90-588[a]	"	8-194 (V80-4601H)
GGW-7407S (45-237)	- - - -	"	"	"	"	"	"

[a] 35-80A (GBJ-25S) Comm. End Cover Gasket also individually available.
[PB] Private Brand Part - not available through Prestolite.