prestolite®

SERVICE PARTS LIST

MCK-4000 SERIES

STARTING MOTORS

ISSUED: 10-8-73(Rev.)

ORIG.EQUIP.MOTOR ENG. NUMBER	SERVICE MOTOR ENG. NUMBER	SERVICE MOTOR SALES NUMBER	VOLTS-12 APPLICATION
MCK-4001	MCK-4001	- - -	Cont.,J.I.Case,Massey-Ferguson
MCK-4002	MCK-4002	46-423	R.H.Sheppard Co.
MCK-4004	MCK-4004	46-571	Lister Blackstone
MCK-4005	MCK-4005	46-357	J.I.Case
MCK-4006	MCK-4006	- - -	Continental Motors
MCK-4007	MCK-4007	46-573	J.I.Case
MCK-4008	MCK-4008	- - - -	J.I.Case,Continental
MCK-4009	MCK-4009	46-312	J.I.Case,Continental
MCK-4010	MCK-4010	46-2206	Towmotor#C-58607
MCK-4010S	MCK-4010S	46-334	Service Motor
MCK-4012	MCK-4012	46-572	Allis-Chalmers,Tractomotive Corp.

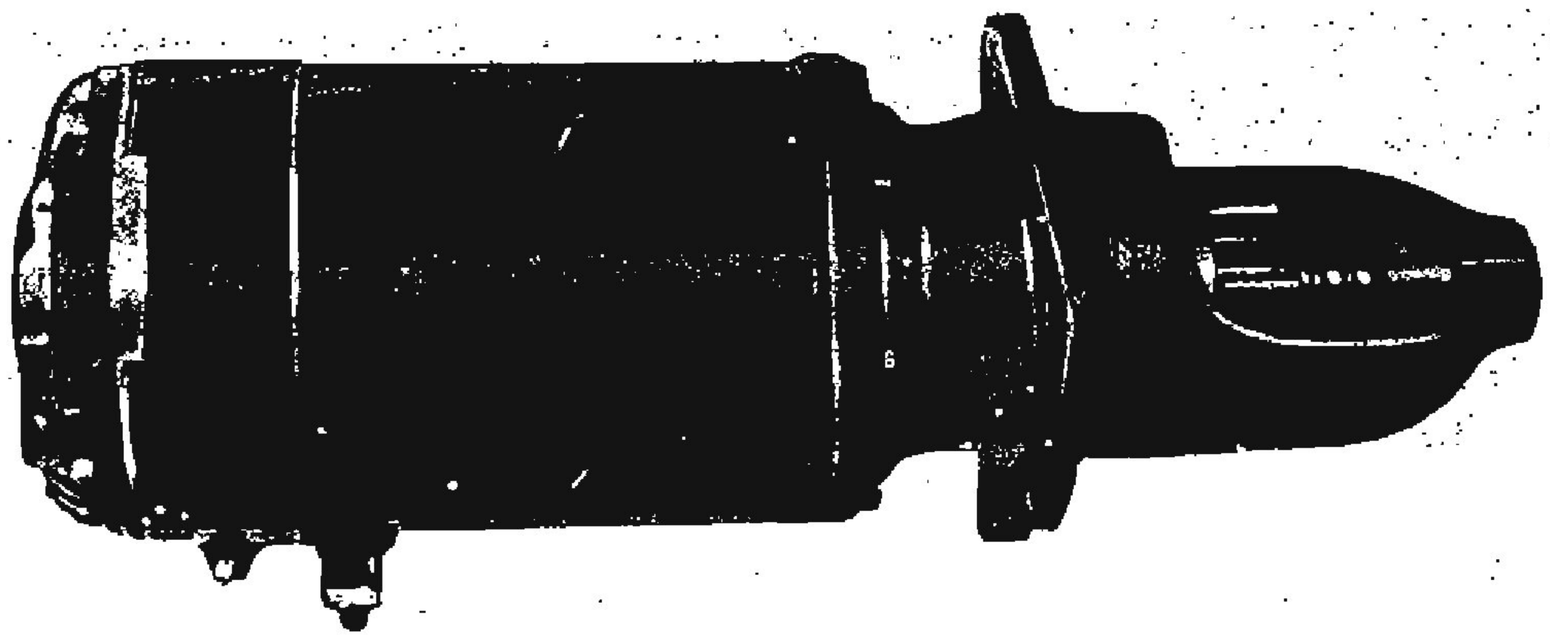

Printed in U.S.A.

File in the
OE-92 PARTS BINDER

MOTOR SECTION

MCK-4000 Series Starting Motor Parts List

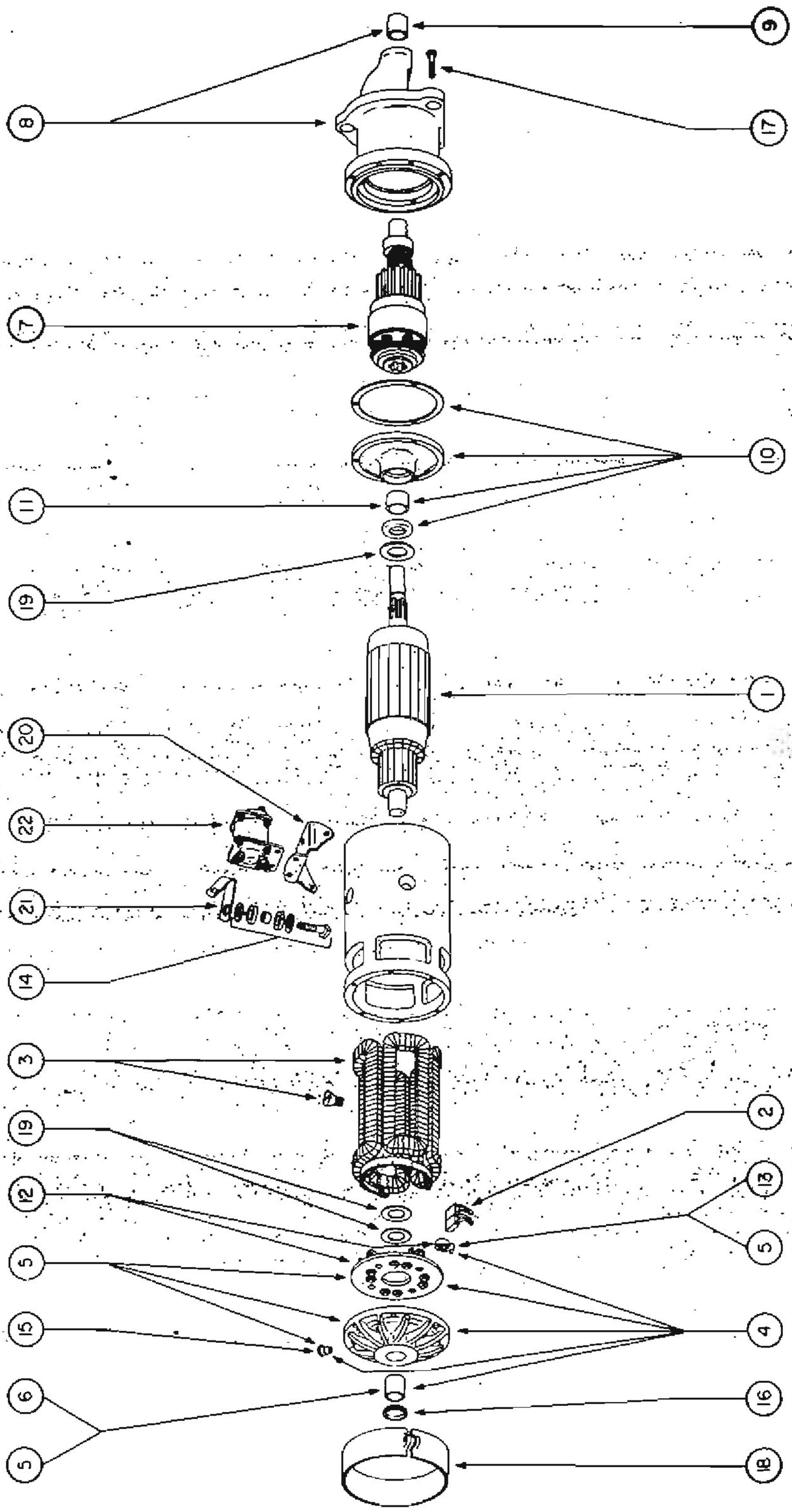

Exploded View of Typical MCK Starting Motor

Assembly	Armature (1)	Brush Set (2)	Field Coil Package (3)	Comm.End Head Assembly (4)	Partial C.E.Head Assembly (5)	C.E. Bearing (6)	Bendix Drive (7)
MCK-4001 - - - -	16-23 (MCK-2006)	17-16 (MBR-1012S)	20-337 (MCK-1005CS)	19-37 (MBR-2415A)	19-194 (MBD-1415A)	24-3 (GBF-79)	59-104 (EBB-11)
MCK-4002 (46-423)	16-240 (MCK-2145)	17-17 (MCK-1012S)	20-310 (MCK-3005AS)	19-73 (MBR-2236B)	19-193 (MBD-1236D)	"	59-89 (EBB-123)
MCK-4004 (46-571)	16-156 (MCK-2045)	17-16 (MBR-1012S)	20-337 (MCK-1005CS)	"	"	"	59-149 (EBB-99)
MCK-4005 (46-357)	16-155 (MCK-2021)	17-17 (MCK-1012S)	20-310 (MCK-3005AS)	"	"	"	59-114 (EBB-27)
MCK-4006 - - - -	16-23 (MCK-2006)	17-16 (MBR-1012S)	20-337 (MCK-1005CS)	19-37 (MBR-2415A)	19-194 (MBD-1415A)	"	59-104 (EBB-11)
MCK-4007 (46-573)	16-157 (MCK-2052)	17-17 (MCK-1012S)	20-310 (MCK-3005AS)	19-73 (MBR-2236B)	19-193 (MBD-1236D)	"	59-114 (EBB-27)
MCK-4008 - - - -	16-23 (MCK-2006)	17-16 (MBR-1012S)	20-337 (MCK-1005CS)	19-37 (MBR-2415A)	19-194 (MBD-1415A)	"	59-104 (EBB-11)
MCK-4009 (46-312)	"	"	"	"	"	"	"
MCK-4010 (46-2206)	16-156 (MCK-2045)	"	"	"	"	"	59-115 (EBB-28)
MCK-4010S (46-334)	"	"	"	"	"	"	"
MCK-4012 (46-572)	16-158 (MCK-2056)	17-17 (MCK-1012S)	20-310 (MCK-3005AS)	19-73 (MBR-2236B)	19-193 (MBD-1236D)	"	59-149 (EBB-99)

Printed in U.S.A.

File in the **OE-92 PARTS BINDER**

MCK-4000 SERIES MOTOR PARTS LIST

Assembly	Pinion Housing Assembly (8)	D.E. Bearing (9)	Intermed. Bearing Assembly (10)	Intermed. Bearing (11)	Brush Plate Assembly (12)	Brush Spring Set (13)	Term. Stud Package (14)
MCK-4001 - - - -	21-72 (PS-1278)	24-7 (MBD-257)	36-841 (MBD-2315)	24-16 (MBD-314)	36-202 (MBR-2079)	50-267 (MBD-195)	90-690
MCK-4002 (46-423)	21-265 (PS-1282)	24-39 (MBD-220)	"	"	"	"	90-382
MCK-4004 (46-571)	21-222 (PS-1228)	24-7 (MBD-257)	"	"	"	"	90-690
MCK-4005 (46-357)	21-243 (PS-1317A)	"	36-20 (MBD-1403)	24-41 (MBD-295)	"	"	90-382
MCK- 4006 - - - -	21-72 (PS-1278)	"	36-841 (MBD-2315)	24-16 (MBD-314)	"	"	90-690
MCK-4007 (46-573)	21-243 (PS-1317A)	"	36-840[a] (MBD-2296)	24-41 (MBD-295)	"	"	90-382
MCK-4008 - - - - -	21-72 (PS-1278)	"	36-841 (MBD-2315)	24-16 (MBD-314)	"	"	90-381
MCK-4009 (46-312)	"	"	"	"	"	"	90-690
MCK-4010 (46-2206)	"	"	"	"	"	"	"
MCK-4010S (46-334)	"	"	"	"	"	"	"
MCK-4012 (46-572)	21-189 (PS-1317B)	"	36-20 (MBD-1403)	24-41 (MBD-295)	"	"	90-382

[a] 36-782(MBD-334) Intermediate Bearing Gasket, 36-360(XA-717) Oil Seal are also available.

Assembly	C.E. Oiler (15)	C.E. Bearing Cover (16)	Housing Mtg. Screw Package (17)	Cover Band (18)	Thrust Washer Package (19)	Bracket (20)	Connector (21)	Switch (22)
MCK-4001 - - - -	36-101A (29X-1573)	36-104 (GAL-40A)	43-358 (MBD-254S)	36-224 (MCK-1024)	90-676	- - - -	- - - -	- - - -
MCK-4002 (46-423)	"	"	"	36-573 (MBD-1024K)	90-692	- - - -	- - - -	- - - -
MCK-4004 (46-571)	"	"	"	36-224 (MCK-1024)	"	37-225 (MBD-253)	26-259 (MCC-34)	15-53 (WSM-4101A)
MCK-4005 (46-357)	"	"	43-373 (MCK-36S)	"	90-266	37-219 (MBD-252)	26-81 (MCK-68)	"
MCK-4006 - - - -	"	"	43-358 (MBD-254S)	"	90-676	"	"	"
MCK-4007 (46-573)	"	"	43-373 (MCK-36S)	"	90-266	"	"	"
MCK-4008 - - - -	"	"	43-358 (MBD-254S)	36-593 (MCK-1024A)	90-676	"	"	"
MCK-4009 (46-312)	"	"	"	"	"	- - - -	- - - -	- - - -
MCK-4010 (46-2206)	"	"	"	"	90-692	- - - -	- - - -	- - - -
MCK-4010S (46-334)	"	"	"	"	"	- - - -	- - - -	- - - -
MCK-4012 (46-572)	"	"	43-373 (MCK-36S)	36-224 (MCK-1024)	90-266	37-219 (MBD-252)	26-81 (MCK-68)	15-53 (WSM-4101A)

prestolite®

SERVICE PARTS LIST

MCK-6000 SERIES

STARTING MOTORS

ISSUED: 1-5-72

ASSEMBLY	SALES NO.	APPLICATION
MCK-6001	46-997	Chrysler M & I
MCK-6002	46-998	Chrysler M & I

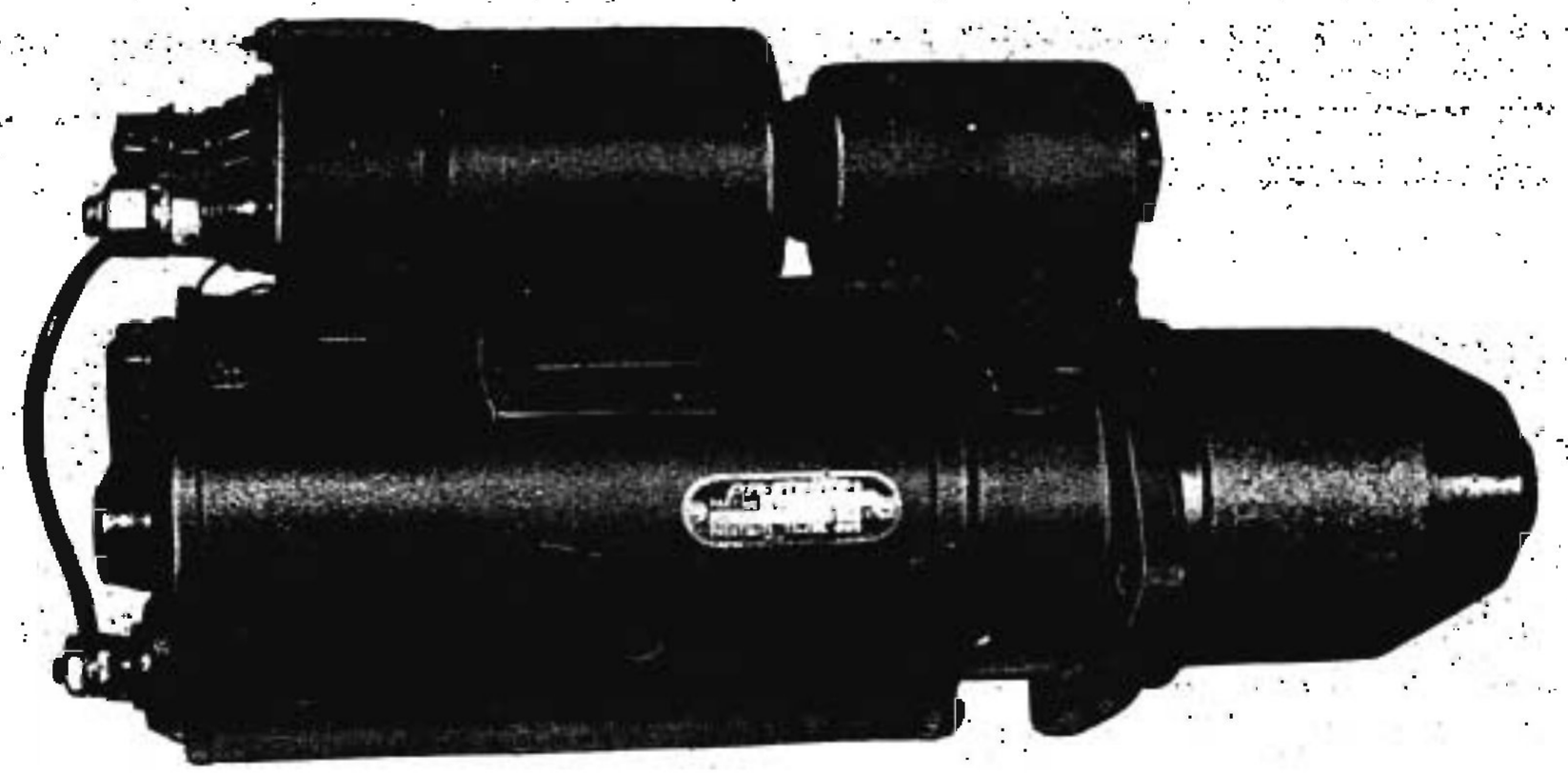

Printed in U.S.A.

File in the
OE-92 PARTS BINDER

MOTOR SECTION

MCK-6000 Series Starting Motor Parts List

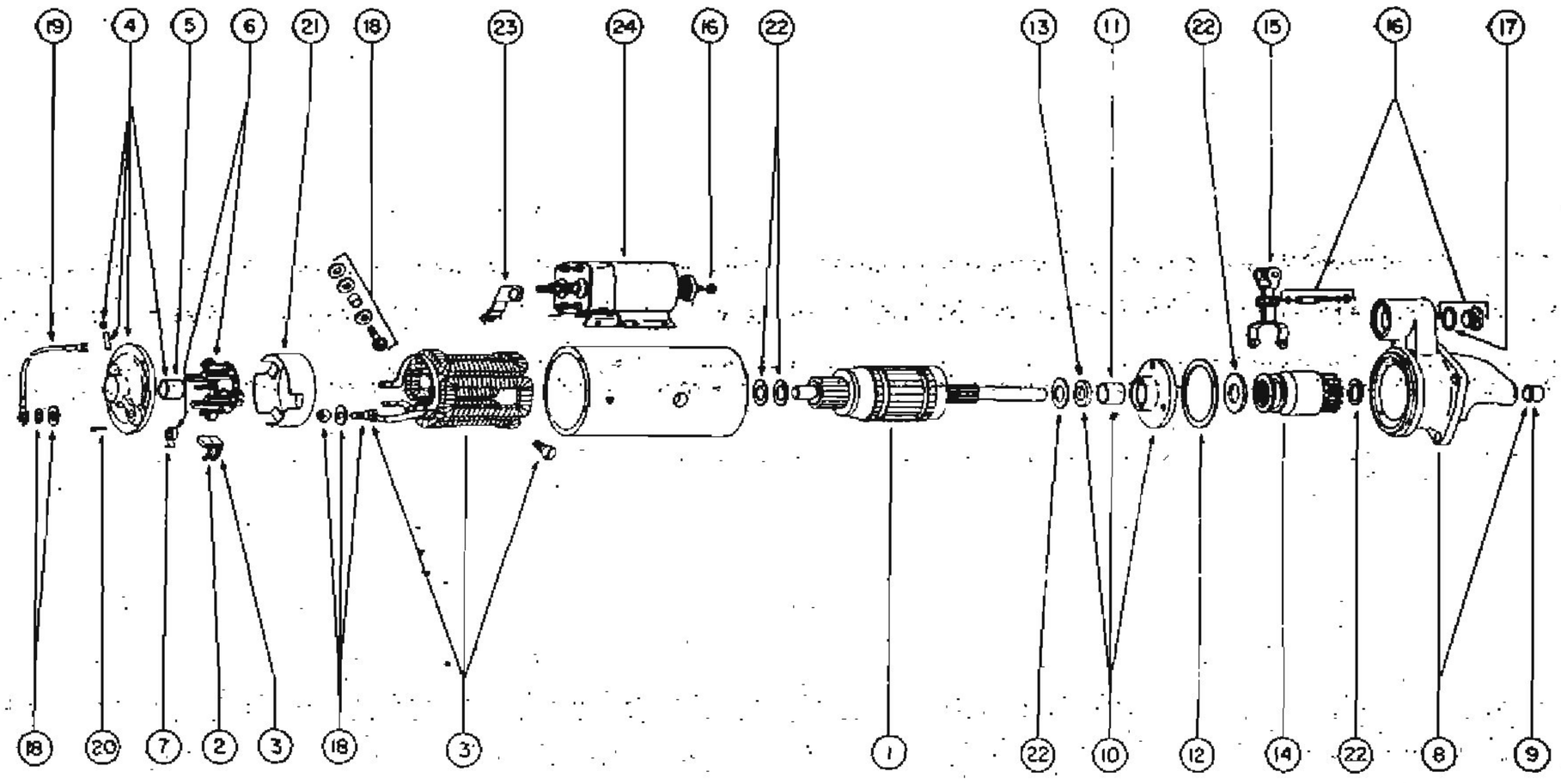

Exploded View of Typical MCK Motor

Assembly	Armature (1)	Brush Set (2)	Field Coil Package (3)	C.E. Head Assembly (4)	C.E. Bearing (5)	Brush Plate Assembly (6)	Brush Spring Set (7)	Pinion Housing (8)
MCK-6001 (46-997)	16-448 (MCK-2059)	17-121 (MEU-1012S)	20-403 (MCK-3005BS)	19-241 (MFY-1002ES)	24-3 (GBF-79)	36-716 (MEU-1064)	50-267 (MBD-19S)	21-376 (PS-1450S)
MCK-6002 (46-998)	16-448 (MCK-2059)	17-121 (MEU-1012S)	20-403 (MCK-3005BS)	19-241 (MFY-1002ES)	24-3 (GBF-79)	36-716 (MEU-1064)	50-267 (MBD-19S)	21-377 (PS-1451S)

MCK-6000 Series Starting Motor Parts List

Assembly	Pinion Bearing (9)	Int. Bearing Assembly (10)	Intermediate Bearing (11)	Int. Bearing Gasket (12)	Oil Seal (13)	Positork Drive (14)	Yoke Assembly (15)	Yoke Adj. Parts Package (16)
MCK-6001 (46-997)	24-76 (MEU-36)	36-854 (MEU-2030)	24-21 (ML-21A)	36-190 (MBD-281)	36-797 (XA-1026)	59-205 (PD-9A)	23-27 (MEU-2042)	90-2110
MCK-6002 (46-998)	24-76 (MEU-36)	36-854 (MEU-2030)	24-21 (ML-21A)	36-190 (MBD-281)	26-797 (XA-1026)	59-205 (PD-9A)	23-27 (MEU-2042)	90-2110

Assembly	Sw. Cover Gasket Plug (17)	Term. Stud Package (18)	Lead Assembly (19)	C.E. Mtg. Screw Package (20)	Insulation Package (21)	Thrust Washer Package (22)	Connector (23)	Solenoid Switch (24)
MCK-6001 (46-997)	36-822 (MFY-63)	90-2109	26-278 (MEU-43)	43-376 (MBD-254CS)	36-888 (MES-81S)	90-2112	36-853 (MCK-26)	15-264 (SAV-4101)
MCK-6002 (46-998)	36-822 (MFY-63)	90-2109	26-278 (MEU-43)	43-376 (MBD-254CS)	36-888 (MES-81S)	90-2112	36-853 (MCK-26)	15-264 (SAV-4101)

Printed in U.S.A.

File in the
OE-92 PARTS BINDER