prestolite®

SERVICE PARTS LIST

MDV-4000 SERIES

TRACTION MOTORS

ISSUED: 9-28-77

ORIG.EQUIP. MOTOR ENG. NUMBER	SERVICE MOTOR ENG. NUMBER	SALES NUMBER	VOLTS: 12 APPLICATION
MDV-4003	- - - -	- - -	Revolvator Company
MDV-4004A	- - - -	- - -	Clark Equip.Co.#312742
MDV-4006A	- - - -	- - -	Baker Material Hdlg.#13AL-4006
MDV-4006B	- - - -	- - -	Baker Material Hdlg.#13AL-4006

MDV-4000 Series Motor Parts List

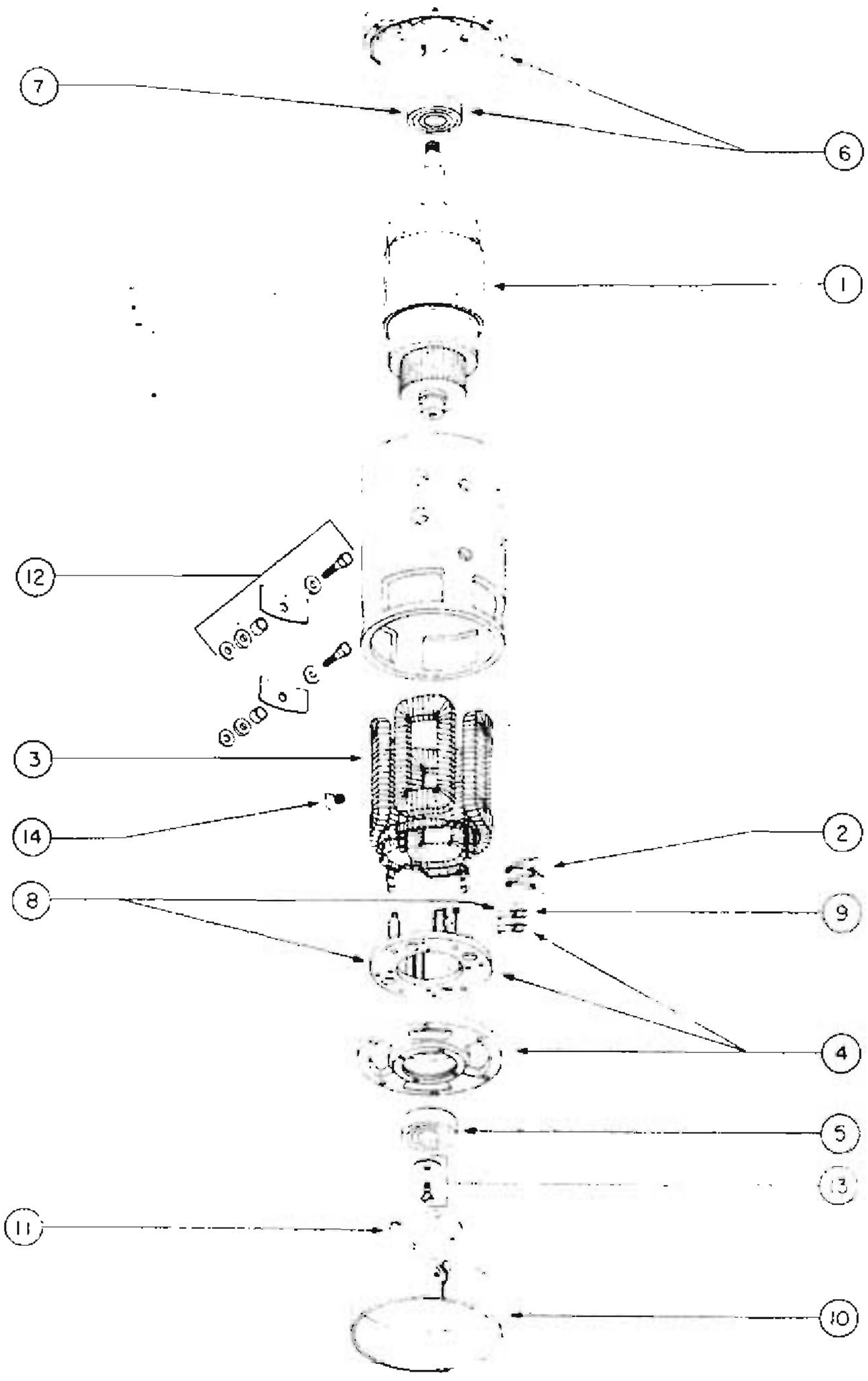

Exploded View of Typical MDV Motor

Assembly	Armature (1)	Brush Set (2)	Field Coil Package (3)	Comm. End Head Assembly (4)	C.E. Bearing (5)	Drive End Head Assembly (6)	D.E. Bearing (7)
MDV-4003 [PB]	16-383 (MDV-2045)	17-77 (MDV-1012AS)	20-287 (MDV-3005S)	19-174 (MDV-2002D)	25-79 (X-4608)	[NR]	25-84[a] (X-4614)
MDV-4004A [PB]	16-131 (MDV-2056)	"	"	19-61 (MDV-2052)	"	22-28[b] (MDV-53)	25-79 (X-4608)
MDV-4006A [PB]	16-268 (MDV-2043)	"	"	19-98 (MDV-2002E)	"	22-287 (MDV-1041AS)	"
MDV-4006B [PB]	"	"	"	19-273 (MDV-2057A)	"	22-220 (MDV-1065)	"

[PB] Private Brand Part - not available thru Prestolite.

[a] 36-740 (XA-744Y) "O" Ring Seal is also available.

[b] Bearing not included.

[NR] Not required.

MDV-4000 SERIES

Assembly	Brush Plate Assembly (8)	Brush Spring Set (9)	Cover Band (10)	C.E. Cover (11)	Terminal Stud Package (12)	Ring & Washer Package (13)	Pole Shoe Screw Package (14)
MDV-4003 [PB]	36-499 (MDV-10148)	50-265 (MDV-19AS)	36-1096 (HDB-1099)	36-787 (MDV-47)	90-354	90-703	90-2608
MDV-4004A [PB]	"	"	36-1005 (HDB-1032)	[NR]	[PB]	[NR]	"
MDV-4006A [PB]	"	"	36-1004 (HDB-32)	36-983 (GBG-63A)	90-354	90-615	[c]
MDV-4006B [PB]	"	"	36-1005 (HDB-1032)	"	"	"	[c]

[PB] Private Brand Part - not available thru Prestolite.

[c] Order as follows; for Flat Head Screws 5/16-24x7/8" use 90-2608 Package.
for Hex.Head Screws 5/16-24x7/8" use 90-2611 Package.

[NR] Not required.