prestolite®

SERVICE PARTS LIST

ASSY. NO. MEU-6001

SALES NO. 46-999

STARTING MOTOR

ISSUED 11-10-69 Rev.: 7-2-84

Application Chrysler M & I

Service Part No.	No. Used	Part Description	Prestolite Sales No.
MBR-2491	1	ARMATURE	16-449
MEU-2030	1	BEARING ASSY.,INTERMEDIATE	36-854
ML-21A	1	BEARING,ABS.BRONZE	24-21
XA-1642	1	SEAL,OIL	36-1163
MEU-31	1	CONNECTOR,SWITCH	36-855
MEU-3005AS	1	FIELD COIL PKG.(POLE SHOE SCREW INCL.)	20-404
MEU-1012S	1	BRUSH SET,SERVICE	17-121
**	1	Stud,Terminal,C.E.	
MBD-334S	1	GASKET PKG.,INT.BEARING(5PCS.)	36-782A
MFY-1002DS	1	HEAD ASSY.,COMM.END	19-239
GBF-79	1	BEARING,ABS.BRONZE	24-3
PS-1449AS	1	HOUSING ASSY.,PINION	21-379
90-2491	1	BEARING,ABS.BRONZE	90-2491
MEU-43	1	LEAD ASSY.	26-278
90-2110	1	MISC.YOKE ADJ.PARTS PKG.	90-2110
MFY-63S	1	GASKET PKG.,PLUG(10PCS.)	36-822A
MEU-1064	1	PLATE ASSY.,BRUSH	36-716
MBD-19S	1	SPRING SET,BRUSH	50-267
PD-9A	1	POSITORK DRIVE(FACET #480420)	59-205
90-2207	1	MOUNTING SCREW PKG.(HEAD & HSG.)	90-2207
SAV-4104	1	SOLENOID SWITCH	15-392
90-2578	1	TERMINAL STUD PKG.(HDWE.INCL.)	90-2578
90-2112	1	THRUST WASHER PKG.	90-2112
MEU-2042	1	YOKE ASSY.	23-27

** Also serviced in 90-2578 Pkg.

prestolite®

SERVICE PARTS LIST

MEU-8000 SERIES

STARTING MOTORS

ISSUED: 2-24-72(Rev.)

ORIG.EQUIP.MOTOR ENG. NUMBER		SERVICE MOTOR ENG. NUMBER	SALES NUMBER	APPLICATION
MEU-8003A	USE	MEU-8003C	46-843	Mack Truck
MEU-8003B	USE	MEU-8003C	46-843	Mack Truck
MEU-8003C		MEU-8003C	46-843	Mack Truck

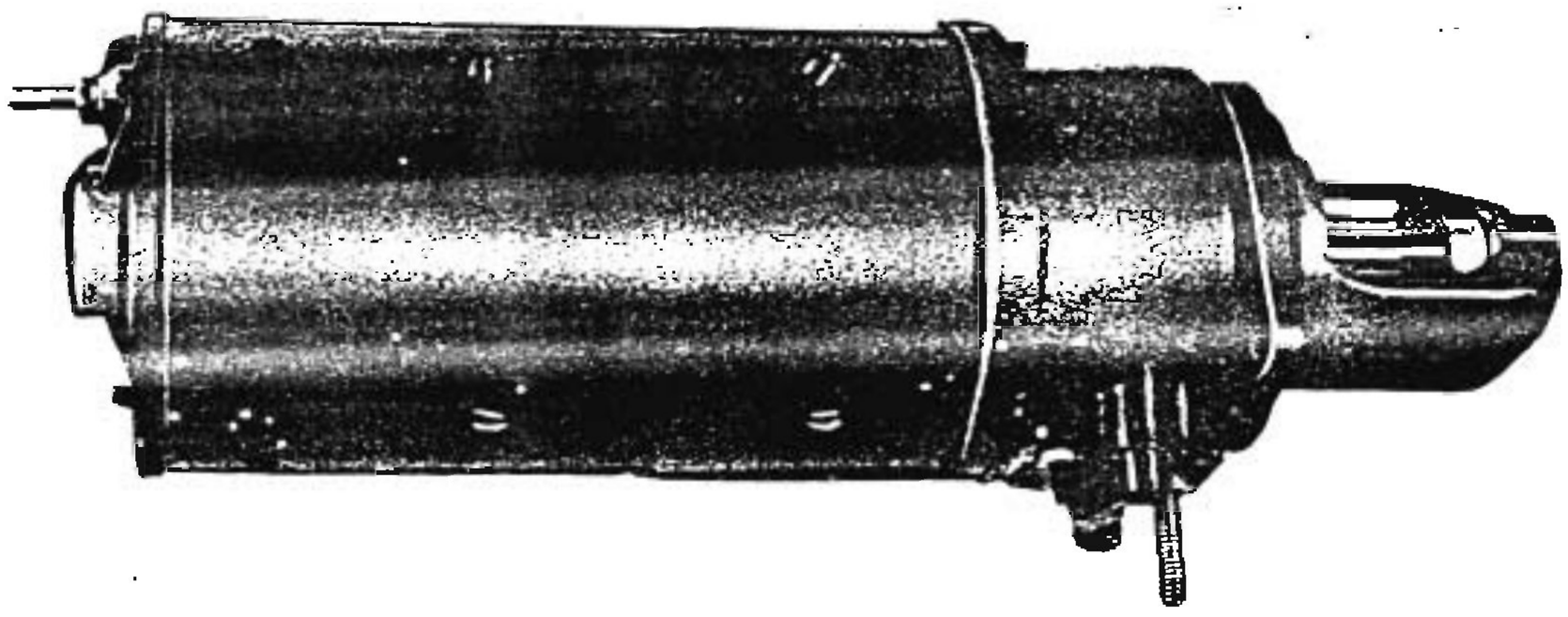

TYPICAL PICTURE OF MEU SERIES MOTOR

MEU-8000 Starting Motor Parts List

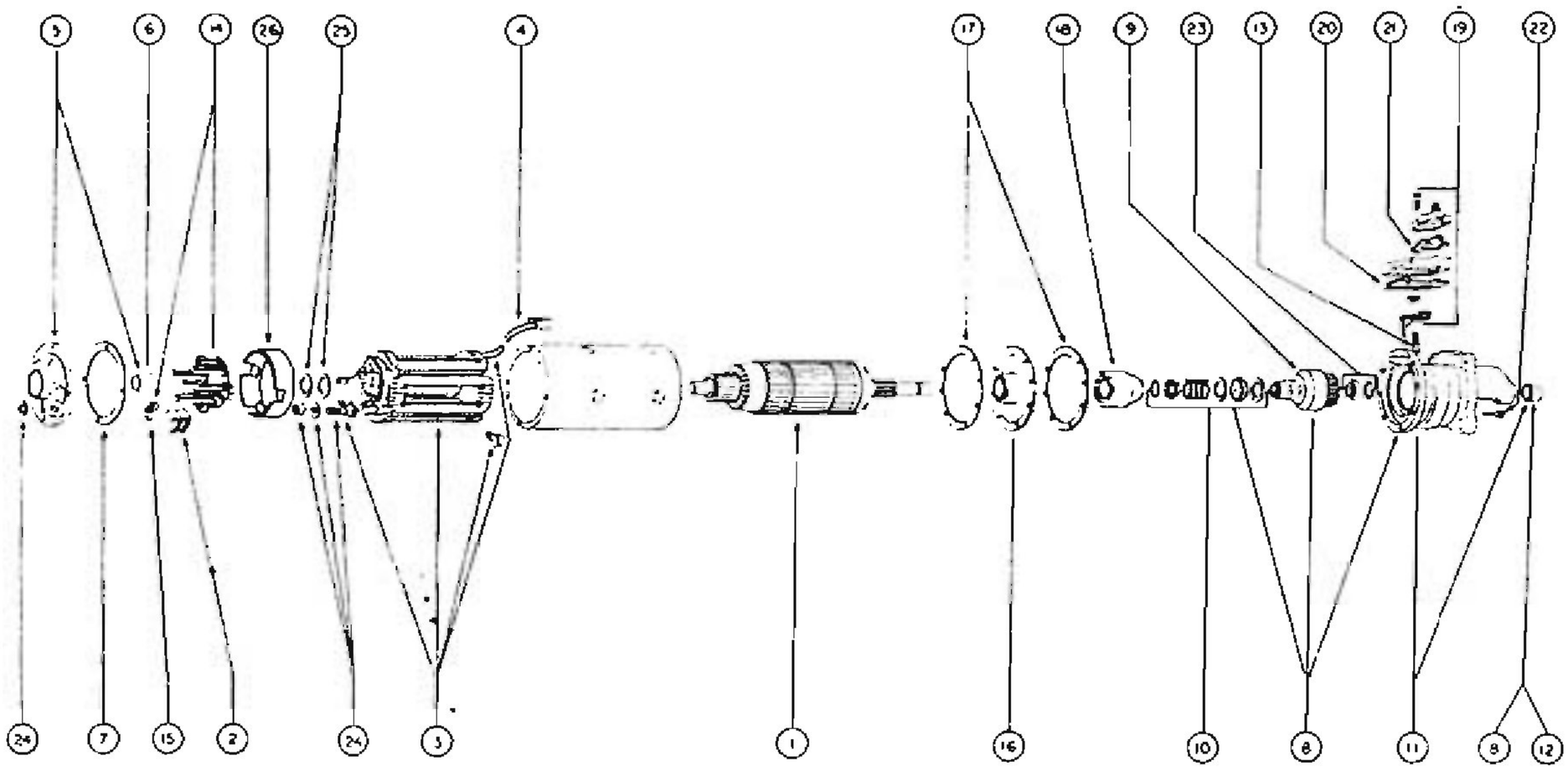

Exploded View of Typical MEU Starting Motor Parts List

Assembly	Armature (1)	Brush Set (2)	Field Coil Package (3)	Lead Assembly (4)	Comm. End Head Assembly (5)	C.E. Bearing (6)	C.E. Head Gasket (7)
MEU-8003A (46-785)	16-328 (MBR-2431)	17-121 (MEU-10125)	20-328 (MEU-3005S)	26-62 (MET-1049A)	19-63 (MEU-2002)	24-3 (GBF-79)	36-115 (MEL-25)
MEU-8003B (46-823)	16-328 (MBR-2431)	17-121 (MEU-10125)	20-328 (MEU-3005S)	26-62 (MET-1049A)	19-63 (MEU-2002)	24-3 (GBF-79)	36-115 (MEL-25)
MEU-8003C (46-843)	16-328 (MBR-2431)	17-121 (MEU-10125)	20-328 (MEU-3005S)	26-62 (MET-1049A)	19-63 (MEU-2002)	24-3 (GBF-79)	36-115 (MEL-25)

Assembly	Solenoid, Clutch & Housing Assembly (8)	Clutch (9)	Clutch Spring & Washer Package (10)	Housing & Solenoid Assembly (11)	Bearing (12)	Terminal Stud (13)	Brush Plate Assembly (14)
MEU-8003A (46-785)	21-344 (PS-2394FS)	18-45 (DRB-3001F)	90-450	21-345 (PS-2394FS-1)	24-27 (MEL-50)	43-216 (X-3180)	36-716 (MEU-1064)
MEU-8003B (46-823)	21-344 (PS-2394FS)	18-45 (DRB-3001F)	90-450	21-345 (PS-2394FS-1)	24-27 (MEL-50)	43-216 (X-3180)	36-716 (MEU-1064)
MEU-8003C (46-843)	21-344 (PS-2394FS)	18-45 (DRB-3001F)	90-450	21-345 (PS-2394FS-1)	24-27 (MEL-50)	43-216 (X-3180)	36-716 (MEU-1064)

Assembly	Brush Spring Set (15)	Int. Bearing Assembly (16)	Int. Bearing Gasket (17)	Moving Core Assembly (18)	Sw. Cover & Contact Assy. Package (19)	Lower Cover Gasket (20)	Upper Cover Gasket (21)
MEU-8003A (46-785)	50-267 (MBD-19S)	36-129A (MEU-2050)	36-114A (MEL-24S)	36-119 (MET-1075)	90-836	36-118A (MET-62S)	36-734A (MFY-62S)
MEU-8003B (46-823)	50-267 (MBD-19S)	36-129A (MEU-2050)	36-114A (MEL-24S)	36-119 (MET-1075)	90-836	36-118A (MET-62S)	36-734A (MFY-62S)
MEU-8003C (46-843)	50-267 (MBD-19S)	36-129A (MEU-2050)	36-114A (MEL-24S)	36-119 (MET-1075)	90-836	36-118A (MET-62S)	36-734A (MFY-62S)

Assembly	Housing Mtg. Screw Pkg. (22)	Snap Ring Package (23)	Term. Stud Package (24)	Thrust Washer Package (25)	Insulation Package (26)
MEU-8003A (46-785)	43-372 (MBD-2548S)	90-449	90-632	90-264	36-888 (MES-81S)
MEU-8003B (46-823)	43-372 (MBD-2548S)	90-449	90-632	90-264	36-888 (MES-81S)
MEU-8003C (46-843)	43-372 (MBD-2548S)	90-449	90-632	90-264	36-888 (MES-81S)