prestolite®

SERVICE PARTS LIST

MEY-4000 SERIES

STARTER DRIVES

ISSUED: 8-9-68

ASSEMBLY	SALES NO.	APPLICATION
MEY-4001	P46-308	Continental
MEY-4002	P46-309	"
MEY-4003	P46-230	"
MEY-4004	P46-229	International Harvester
MEY-4005	P46-231	" "
MEY-4006	P46-340	Continental
MEY-4007	P46-716	International Harvester

nted in U.S.A.

MEY-4000 Series Starter Drive Parts List

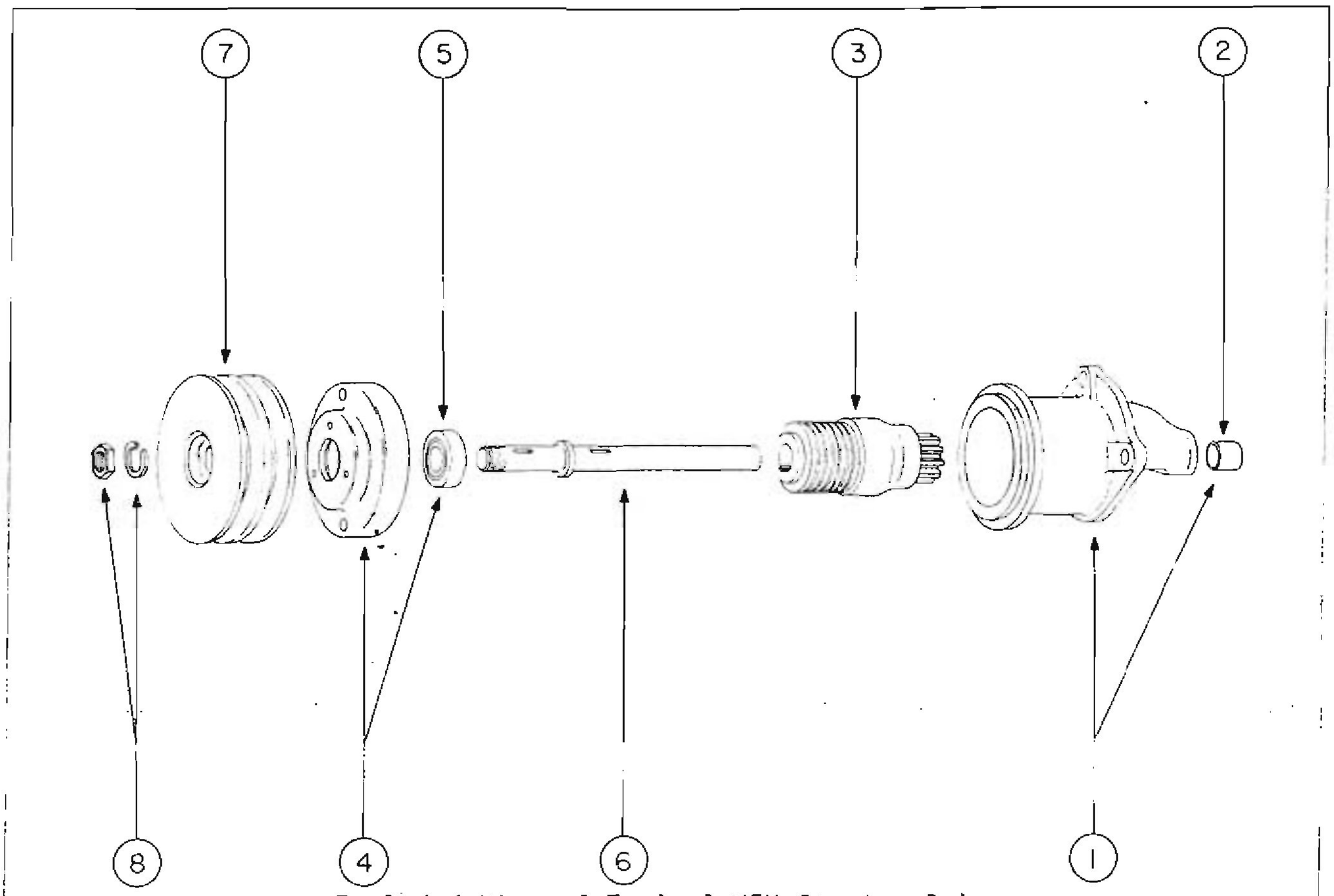

Exploded View of Typical MEY Starter Drive

Assembly	Pinion Housing Assembly (1)	Pinion Housing Bearing (2)	Bendix Drive (3)	End Head Assembly (4)	End Head Bearing (5)	Shaft (6)	Pulley (7)	Nut & Washer Package (8)
MEY-4001 (P46-308)	P21-181 (PS-1375G)	P24-23 (MG-77A)	P59-117 (EBB-[illegible])	P22-90 (MEY-1003[illegible]	P25-21 [illegible]-3380)	P36-480 (MEY-6)	P34-253 (PU-597)	P90-33
MEY-4002 (P46-309)	P21-181 (PS-1375G)	P24-23 (MG-77A)	P59-[illegible] (EBB-[illegible]	P22-90 (MEY-1003[illegible]	P25-21 [illegible]-3380)	P36-480 (MEY-6)	P34-253 (PU-597)	P90-33
MEY-4003 (P46-231)	P21-230 (PS-1231G)	P24-22 (MZ-46A)	P59-151 (EBB-121)	P22-59 (MEY-1047)	P25-21 (X-3380)	P36-461 (MEY-48)	P34-253 (PU-597)	P90-33
MEY-4006 (P46-340)	P21-235 (PS-1375R)	P24-23 (MG-77A)	P59-[illegible] (EBB-97)	P22-65 (MEY-1003A)	P25-21 (X-3380)	P36-480 (MEY-6)	P34-265 (PU-631)	P90-33
MEY-4007 (P46-716)	P21-230 (PS-1231G)	P24-22 (MZ-46A)	P59-151 (EBB-121)	P22-59 (MEY-1047)	P25-21 (X-3380)	P36-461 (MEY-48)	- - - -	P90-33