prestolite®

SERVICE PARTS LIST

MGF-4000 SERIES

TRACTION MOTORS

ISSUED: 1-4-79

ORIG.EQUIP.MOTOR ENG. NUMBER	SERVICE MOTOR ENG. NUMBER	SERVICE MOTOR SALES NUMBER	VOLTS: 24 APPLICATION
MGF-4001	- - - -	- - - -	Clark Equip.Co.#399115
MGF-4002	- - - -	- - - -	Clark Equip.Co.#1620657
MGF-4003	- - - -	- - - -	Clark Equip.Co.#1614567
MGF-4005	- - - -	- - - -	Clark Equip.Co.#1675162
MGF-4005A	- - - -	- - - -	Clark Equip.Co.#1724062
MGF-4006	- - - -	- - - -	Clark Equip.Co.#1675163
MGF-4008	- - - -	- - - -	Eaton Corp.#5059966-01

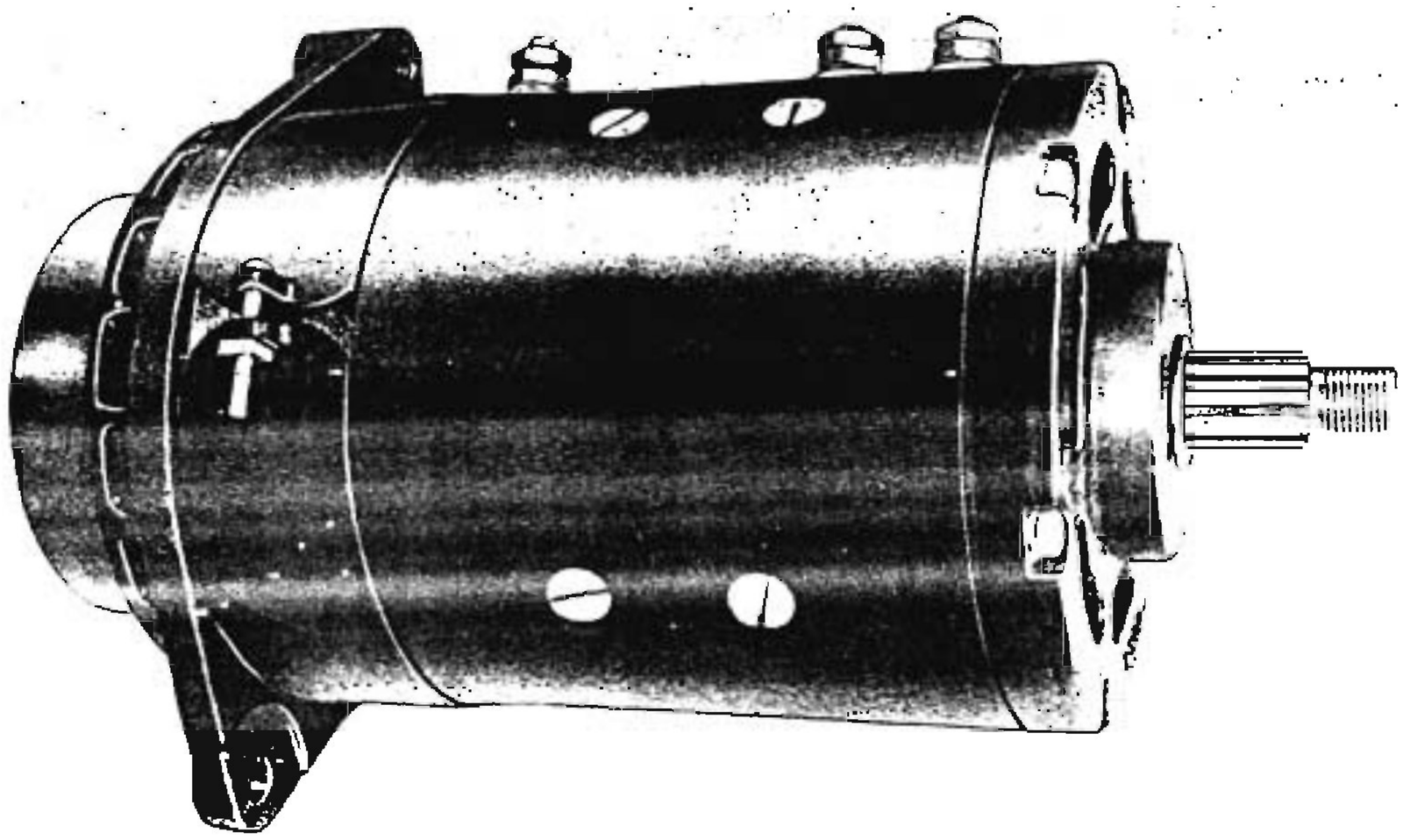

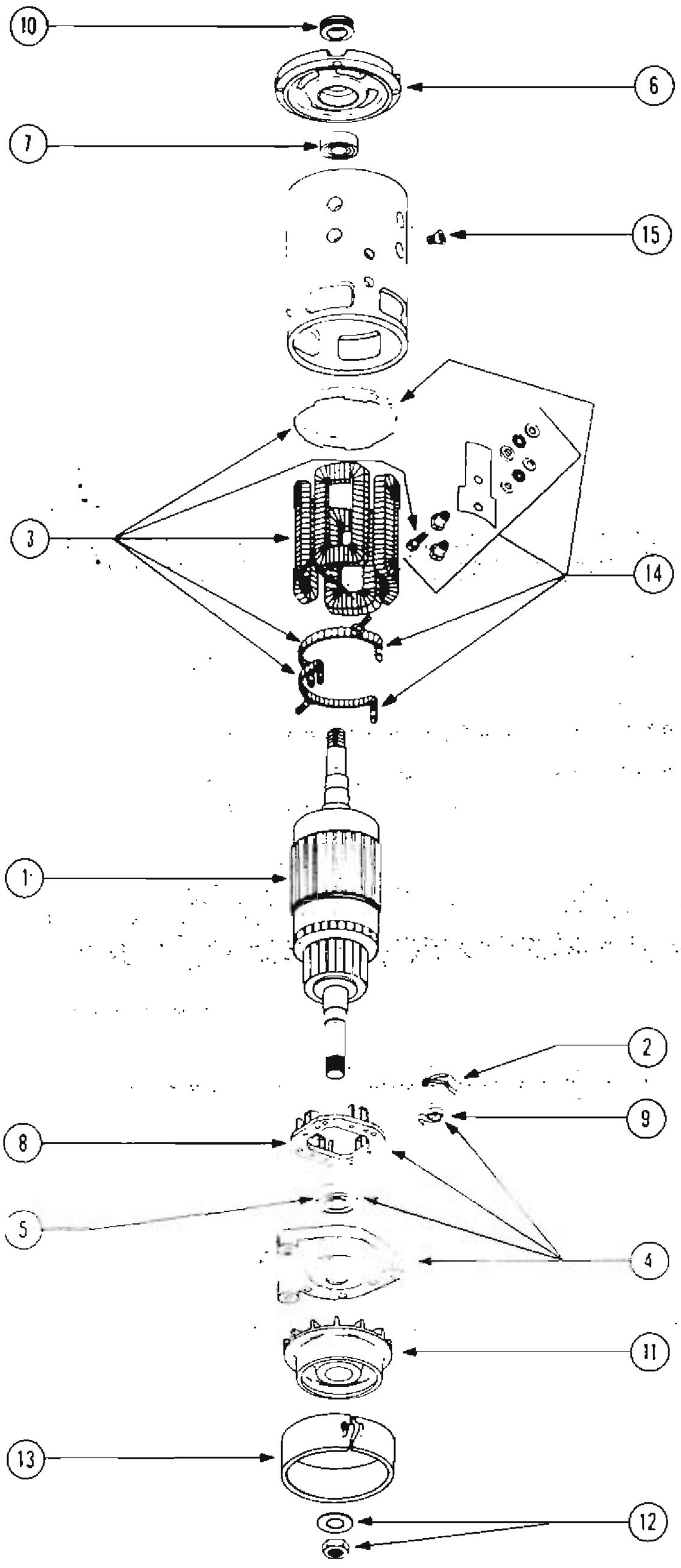

Exploded View of Typical MGF Motor

Assembly	Armature (1)	Brush Set (2)	Field Coil Package (3)	Comm. End Head Assembly (4)	C.E. Bearing (5)	Drive End Head (6)	D.E. Bearing (7)
MGF-4001 [PB]	[PB]	17-163 (MEA-1012S)	[PB]	[PB]	25-79 (X-4608)	[PB]	25-79 (X-4608)
MGF-4002 [PB]	[PB]	"	[PB]	[PB]	"	[PB]	"
MGF-4003 [PB]	[PB]	"	[PB	[PB]	"	[PB]	"
MGF-4005 [PB]	[PB]	"	[PB]	[PB]	"	[PB]	"
MGF-4005A [PB]	[PB]	"	[PB]	[PB]	"	[PB]	"
MGF-4006 [PB]	[PB]	"	[PB]	[PB]	"	[PB]	"
MGF-4008 [PB]	[PB]	17-138 (MGF-1012S)	[PB]	[PB][a]	25-79[a] (X-4608)	[PB]	[PB]

[PB] Private Brand Part- not available thru Prestolite.

[a] 36-105(GAL-40C) C.E. Bearing Cover is available if required.

MGF-4000 SERIES

Assembly	Brush Plate Assembly (8)	Brush Spring Set (9)	Armature Shaft Collar (10)	Brake Drum (11)	Nut & Washer Package (12)	Cover Band (13)	Terminal Stud Package (14)	Pole Shoe Screw Package (15)
MGF-4001 [PB]	[PB]	50-326 (MEA-185)	36-974 (MEA-35)	[PB]	90-650	36-1004 (HDB-32)	90-405	90-2608
MGF-4002 [PB]	[PB]	"	"	[PB]	"	"	"	"
MGF-4003 [PB]	[PB]	"	"	[PB]	"	36-1005 (HDB-1072)	"	"
MGF-4005 [PB]	90-2495	50-375 (MGP-185)	"	[PB]	"	36-1069 (HDB-1072B)	[PB]	[c]
MGF-4005A [PB]	"	"	"	- - - -	"	35-1006 (HDB-22)	[PB]	[c]
MGF-4006 [PB]	"	"	"	[PB]	"	36-1059 (HDB-1072B)	[PB]	[c]
MGF-4008 [PB]	"	"	- - - -	- - - -	- - - -	[PB][b]	[PB]	[c]

[PB] Private Brand Part - not available thru Prestolite

[b] 36-869 (MKD-185) Band Spring Package is available for early Production Bands only

[c] Order as follows: For Flat Head Screws 5/16-24x7/8" use 90-2608 Package
For Hex.Head Thread Rolling Screws 5/16-18x1" use 90-2610 Package.
For Hex.Head Screws 5/16-24x7/8" use 90-2611 Package
For Flat Head Thread Rolling Screws 5/16-18x7/8" use 90-2612 Package.