prestolite®

SERVICE PARTS LIST

MHF SERIES

HOSE REEL MOTORS

ISSUED: 6-12-72(Rev.)

ORIG.EQUIP.MOTOR ENG. NUMBER		SERVICE MOTOR ENG. NUMBER	SALES NUMBER	APPLICATION
+ *MHF-4001	USE	MHF-4003	46-898	Tokheim
+ MHF-4002		MHF-4002	46-892	Philadelphia Valve
+ MHF-4003		MHF-4003	46-898	Brown Steel Tank
+ MHF-4004		MHF-4004	46-2027	C.B.Hannay
+ *MHF-4005T		MHF-4005T	- - -	Tokheim
*MHF-5001		MHF-5001	- - -	Tokheim
*MHF-5002		MHF-5002	- - -	Tokheim

* Complete Motor Available thru Tokheim Corp. only, Components are available thru Prestolite Co.

\+ Please note that once this Explosion Proof Motor has been dissassembled and repaired, it is no longer considered to be U.L. listed and/or approved.

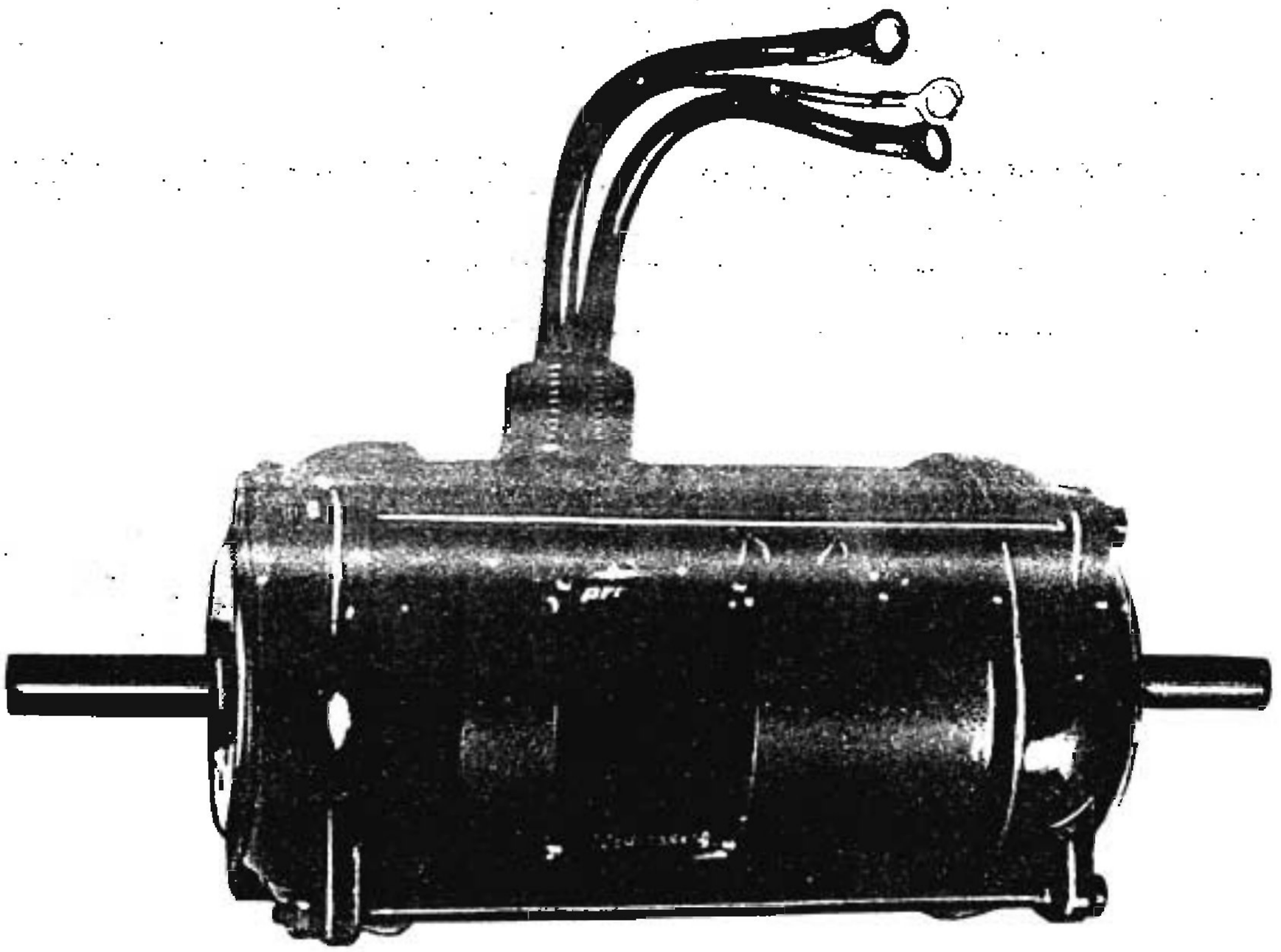

TYPICAL PICTURE OF MHF SERIES MOTOR

MHF Series Hose Reel Motor Parts List

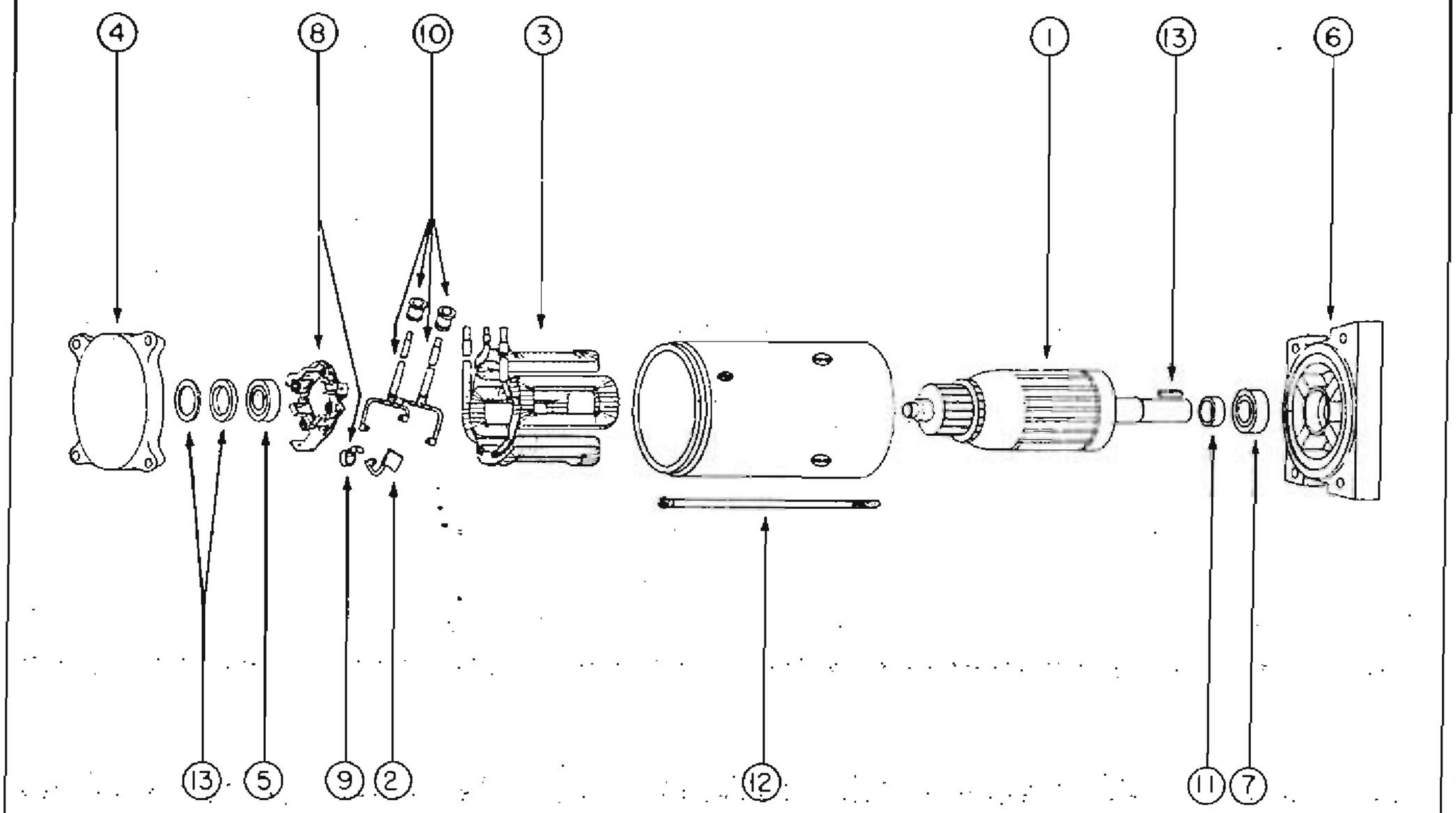

Exploded View of Typical MHF Hose Reel Motor

Assembly	Armature (1)	Brush Set (2)	Field Coil Package (3)	Comm.End Head (4)	C.E. Ball Bearing (5)	D.E. Head (6)	D.E. Ball Bearing (7)
MHF-4001[a] - - - -	16-459[f] (MHF-2113S)	[b]	- - - -	- - - -	[b]	- - - -	[b]
MHF-4002 (46-892)	16-460[f] (MHF-2006S)	[c]	- - - -	- - - -	[c]	- - - -	[c]
MHF-4003 (46-898)	16-459[f] (MHF-2113S)	[b]	- - - -	- - - -	[b]	- - - -	[b]
MHF-4004 (46-2027)	16-467[f] (MHF-2114S)	[d]	- - - -	- - - -	[d]	- - - -	[d]
MHF-4005T[a] - - - -	16-470[f] (MHF-2113AS)	[e]	- - - -	- - - -	[e]	- - - -	[e]
MHF-5001[a] - - - -	16-355 (MHF-2113)	17-122 (MDL-1118BS)	20-346 (MHF-1005AS)	19-188 (MHF-2A)	25-3 (X-3212)	22-133 (MHF-3A)	25-21 (X-3380)
MHF-5002[a] - - - -	16-355 (MHF-2113)	17-122 (MDL-1118BS)	20-346 (MHF-1005AS)	19-254 (MHF-25)	25-3 (X-3212)	22-194 (MHF-26)	25-21 (X-3380)

[a] Complete Motor Available thru Tokheim Corp only.
[b] Available in 90-2129 Bearing & Brush Pkg.
[c] Available in 90-2130 Bearing & Brush Pkg.
[d] Available in 90-2146 Bearing & Brush Pkg.
[e] Available in 90-2148 Bearing & Brush Pkg.
[f] Bearing & Brush Pkg. included with Armature.

MHF Series Hose Reel Motor Parts List

Assembly	Brush Plate Assembly (8)	Brush Spring Set (9)	Brush Lead Package (10)	Felt Washer Retainer (11)	Thru Bolt Package (12)	Misc. Parts Package (13)	
MHF-4001[a] - - - -	- - - -	[b]	- - -	[b]	[b]	[b]	
MHF-4002 (46-892)	- - - -	[c]	- - -	- - - -	[c]	[c]	
MHF-4003 (46-898)	- - - -	[b]	- - -	[o]	[b]	[b]	
MHF-4004 (46-2027)	- - - -	[d]	- - -	[d]	[d]	[d]	
MHF-4005T[a] - - - -	- - - -	[e]	- - -	[e]	[e]	[e]	
MHF-5001[a] - - - -	36-757 (MDL-1064K)	50-263 (MZ-19S)	90-821	35-29 (GR-32)	36-756 (GCO-20SS)	90-830	
MHF-5002[a] - - - -	36-757 (MDL-1064K)	50-263 (MZ-19S)	90-821	35-29 (GR-32)	36-874 (MHF-20S)	90-830	

[a] Complete Motor Available thru Tokheim Corp. only.
[b] Available in 90-2129 Bearing & Brush Pkg.
[c] Available in 90-2130 Bearing & Brush Pkg.
[d] Available in 90-2146 Bearing & Brush Pkg.
[e] Available in 90-2148 Bearing & Brush Pkg.

Printed in U.S.A.

File in the
OE-92 PARTS BINDER