prestolite®

SERVICE PARTS LIST

MMU SERIES

STARTING MOTORS

ISSUED: 6-1-79 Revised: 6-18-85

ORIG.EQUIP.MOTOR ENG. NUMBER		SERVICE MOTOR ENG. NUMBER	SALES NUMBER	VOLTS: 24 APPLICATION
MMU-4001,R	USE	MMU-4001R	46-2442	Lycoming(Aircraft)

MMU Series Starting Motor Parts List

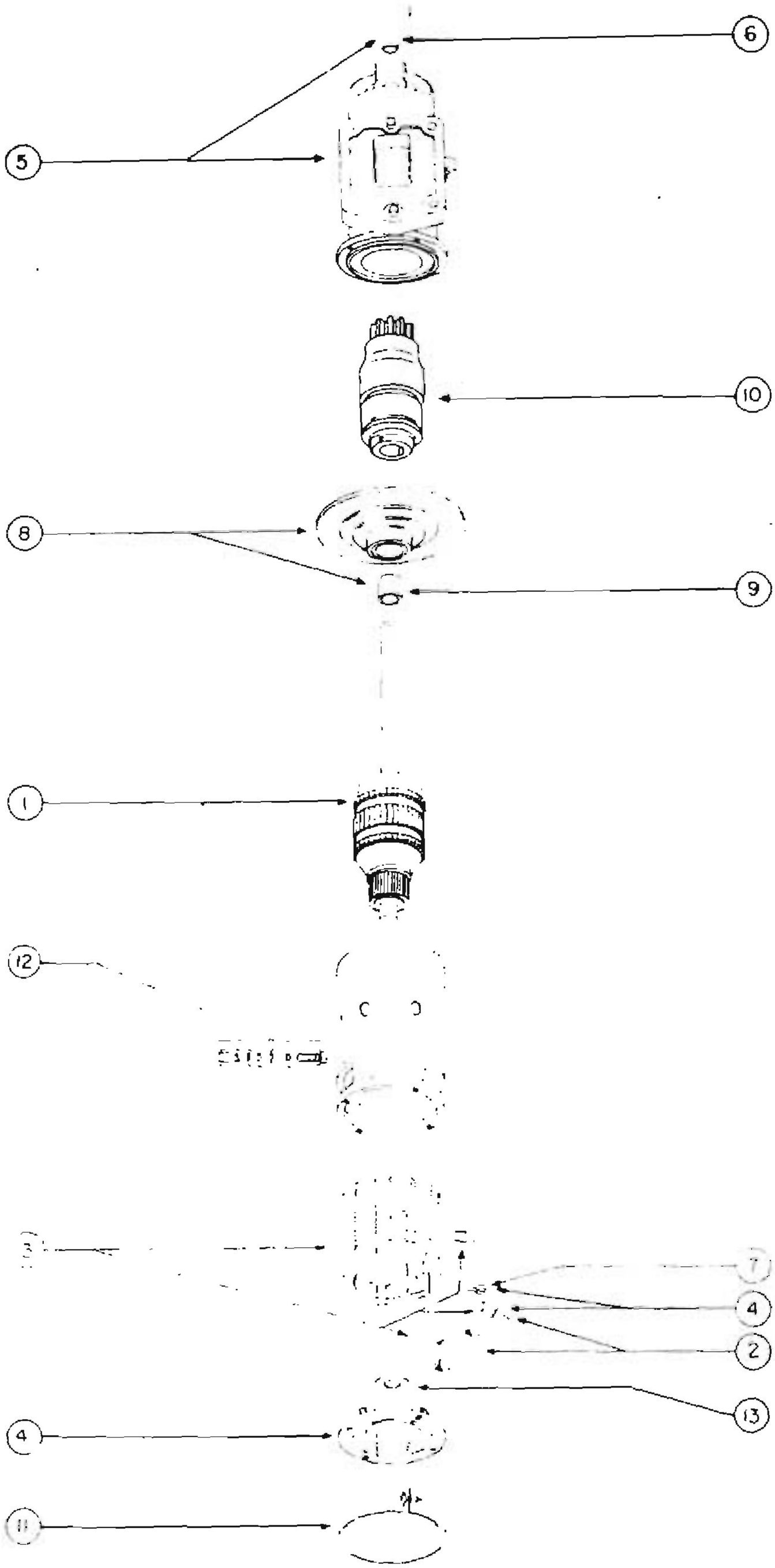

Exploded View of Typical MMU Starting Motor

Assembly	Armature (1)	Brush Set (2)	Field Coil Package (3)	Comm. End Head Assembly (4)	Pinion Housing Assembly (5)	D.E. Bearing (6)	Brush Spring Set (7)
MMU-4001,R (46-2442)	16-870 (MMU-2386S)	17-135 (MHB-2012AS)	20-372 (MHB-3005AS)	19-336 (MBP-2002D)	21-342 (PS-1435)	24-23 (MG-77A)	50-263 (MZ-19S)

MMU SERIES

Assembly	Intermediate Bearing Assembly (8)	Intermed. Bearing (9)	Bendix Drive (10)	Cover Band (11)	Terminal Stud Package (12)	Thrust Washer Package (13)	
MMU-4001,R (46-2442)	36-15 (MZ-1236)	24-51 (MZ-339)	59-177[a] (EBB-124A)	36-321 (MZ-24A)	90-2502	90-2677	

[a] 90-2139 Bendix Pin Package(25Pcs.) is also available.