FILE IN THE

prestolite SERVICE MANUAL

ALL

ALTERNATOR SECTION

(Issued 3-16-78)

VOLTS 24 VENTILATED Yes RATED OUTPUT 20 Amperes

BRUSHES 2 CONTROL Voltage Regulator ROTATION Bi-directional

BEARINGS Sealed, Ball at both ends.

LUBRICATION Bearings are pre-lubricated. No additional lubrication is necessary.

BRUSH SPRING TENSION 9.5 to 11 ounces when spring is compressed to 1/4 inch.

END PLAY Negligible. Unit should rotate freely without binding. A condition of end play would indicate improper assembly, damage or excessive wear.

GROUND POLARITY Negative. NOTE: DO NOT ATTEMPT TO POLARIZE AN ALTERNATOR - DAMAGE MAY OCCUR TO THE ALTERNATOR, REGULATOR or CIRCUITS.

ROTOR CURRENT DRAW (70°F.) .9 to 1.1 maximum amperes at 20.0 volts.

OUTPUT TEST (70°F.) 26.3 volts, 10 minimum amperes, 1500 RPM alternator speed.
28.4 volts, 20 minimum amperes, 2700 RPM alternator speed.

UNIT	INTERNAL WIRING
ALL-5201, A, S	Figure 1.
ALL-6001	Figure 2.
ALL-6202	Figure 3.
ALL-6301	Figure 4.
ALL-6302	Figure 4.

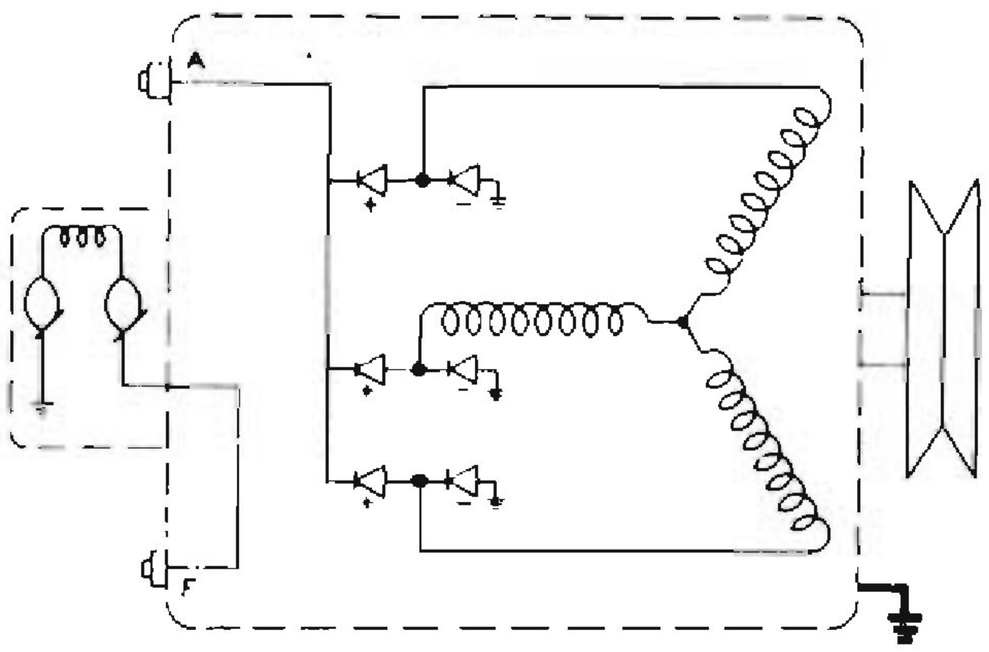

Figure 1.

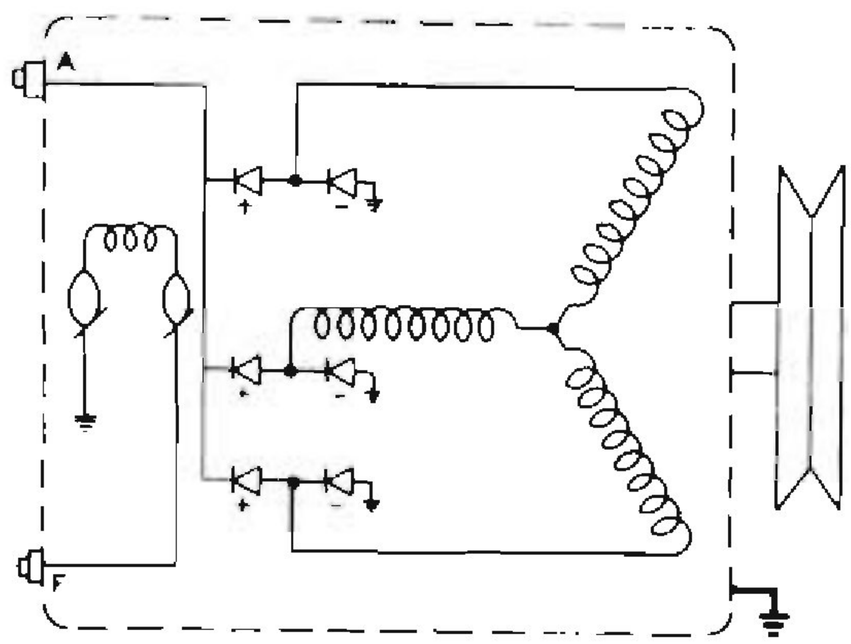

Figure 2.

Printed in U.S.A.

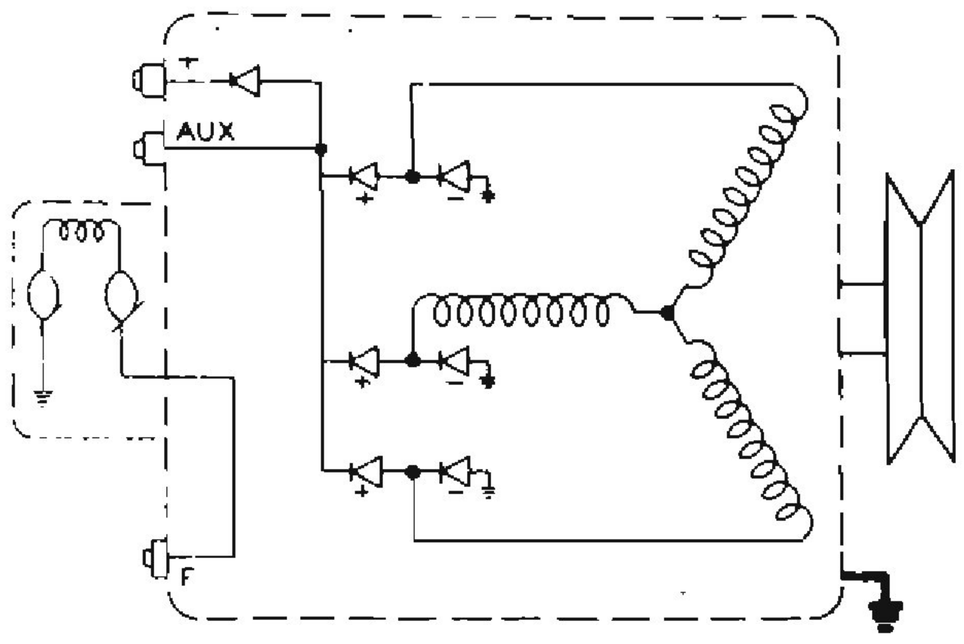

Figure 3.

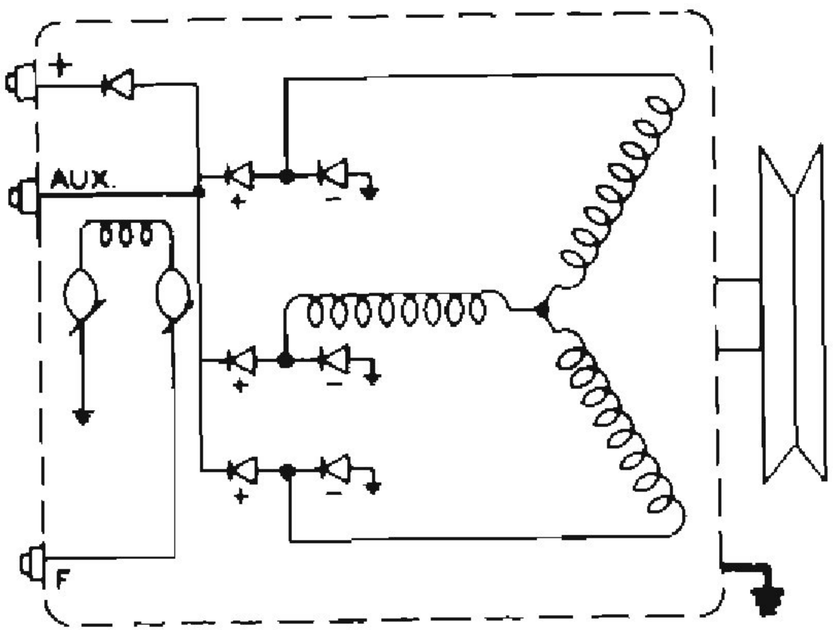

Figure 4.