FILE IN THE

prestolite SERVICE MANUAL ALM

ALTERNATOR SECTION

(Issued 3-16-78)

VOLTS 24 VENTILATED See Note 1 RATED OUTPUT 30 Amperes

BRUSHES 2 CONTROL Voltage Regulator ROTATION Bi-directional

BEARINGS Sealed, Ball at Drive End.

LUBRICATION Bearings are pre-lubricated. No additional lubrication necessary.

BRUSH SPRING TENSION 9.5 to 11 ounces when spring is compressed to 1/4 inch.

BRUSH SPREADER TOOL When reassembling an alternator, it will be necessary to spread the brushes so that they will not interfere with the installation of the rotor.

With the use of an Allen wrench and a piece of stiff wire, the brushes can easily be spread. See figure 1.

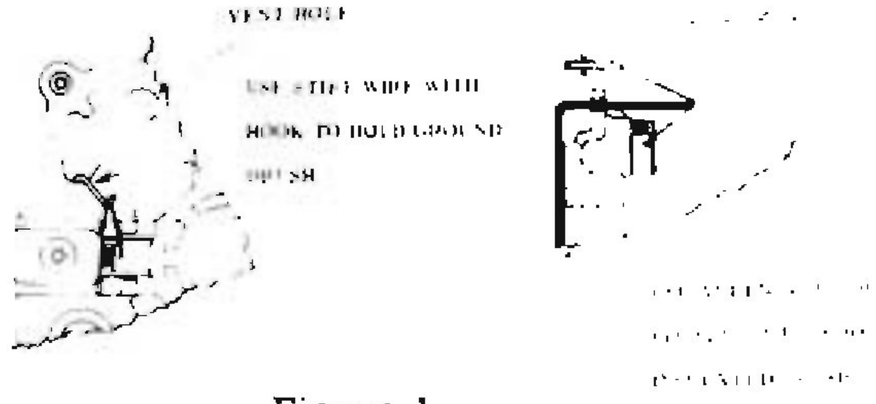

Figure 1.

END PLAY Negligible. Unit should rotate freely without binding. A condition of end play would indicate improper assembly, damage or excessive wear.

GROUND POLARITY See tabulation. NOTE: DO NOT ATTEMPT TO POLARIZE AN ALTERNATOR - DAMAGE MAY OCCUR TO THE ALTERNATOR, REGULATOR or CIRCUITS.

ROTOR CURRENT DRAW (70°F.) 1.1 to 1.2 maximum amperes at 20.0 volts.

OUTPUT TEST (70°F.) 26.5 volts, 10 minimum amperes, 1600 RPM alternator speed.
28.4 volts, 30 minimum amperes, 4800 RPM alternator speed.

UNIT	TYPE SLIP RING BEARING	GROUND POLARITY	INTERNAL WIRING
ALM-5101	Roller	Negative	Figure 2
ALM-5102PS-1	Sealed ball	Positive	Figure 3
ALM-5102S-1	Sealed ball	Negative	Figure 2
ALM-5103	Roller	Negative	Figure 2
ALM-5201PS-1	Sealed ball	Positive	Figure 4
ALM-5201S-1	Sealed ball	Negative	Figure 5
ALM-6001	Sealed ball	Negative	Figure 2
ALM-6202	Sealed ball	Negative	Figure 6

NOTE 1 - This series alternator is ventilated by air pressure through a hose type connection on the Drive End Head. For this reason, do not operate alternator at full output for more than 30 seconds unless adequate air pressure for cooling is used.

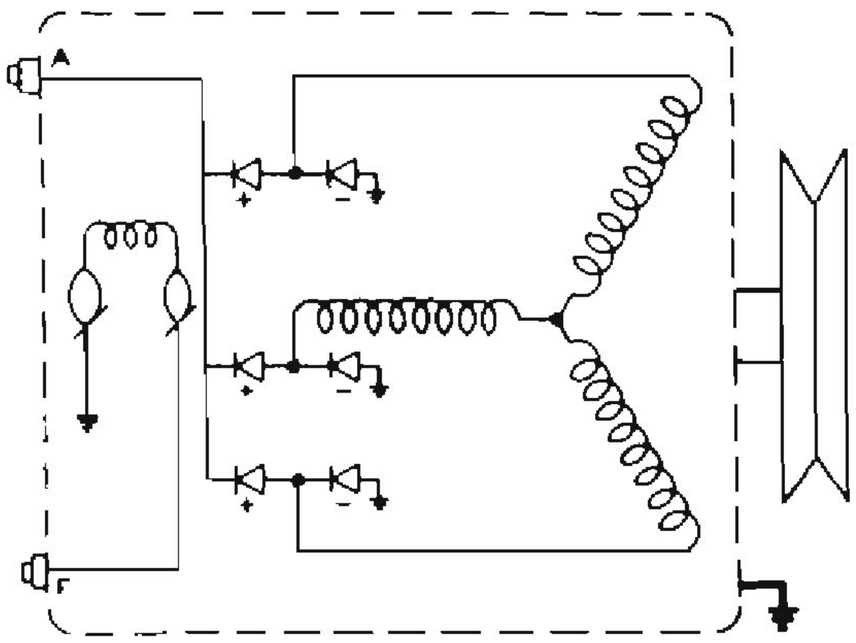

Figure 2.

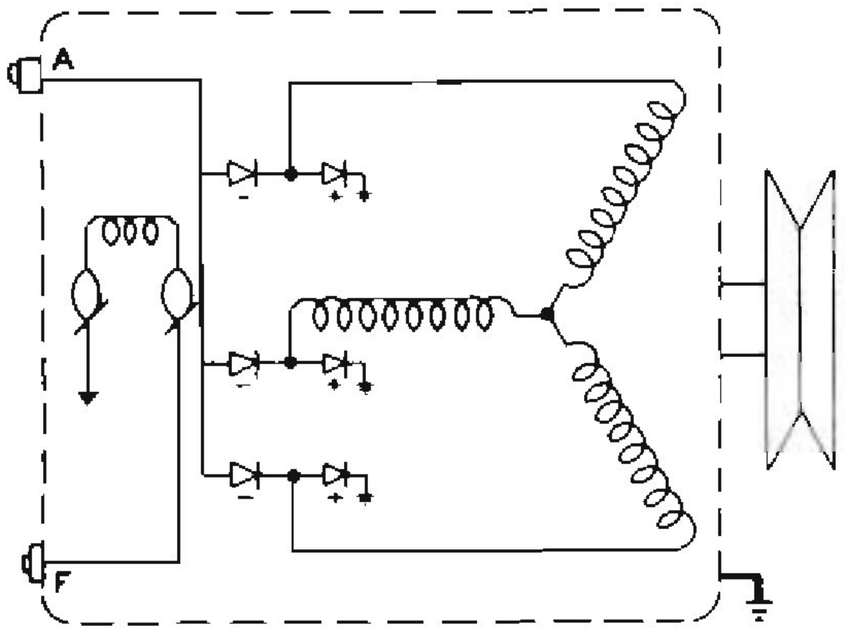

Figure 3.

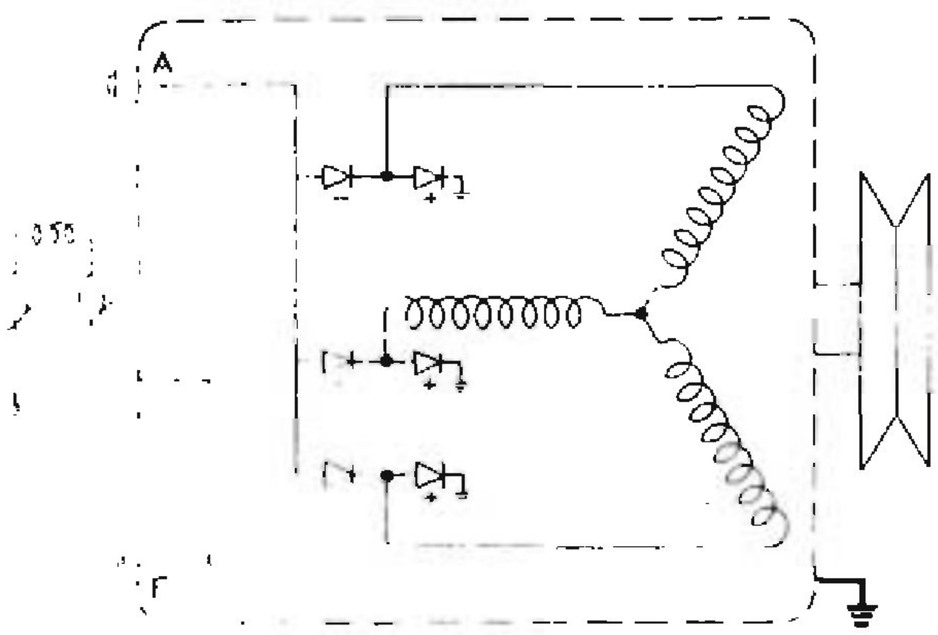

Figure 4.

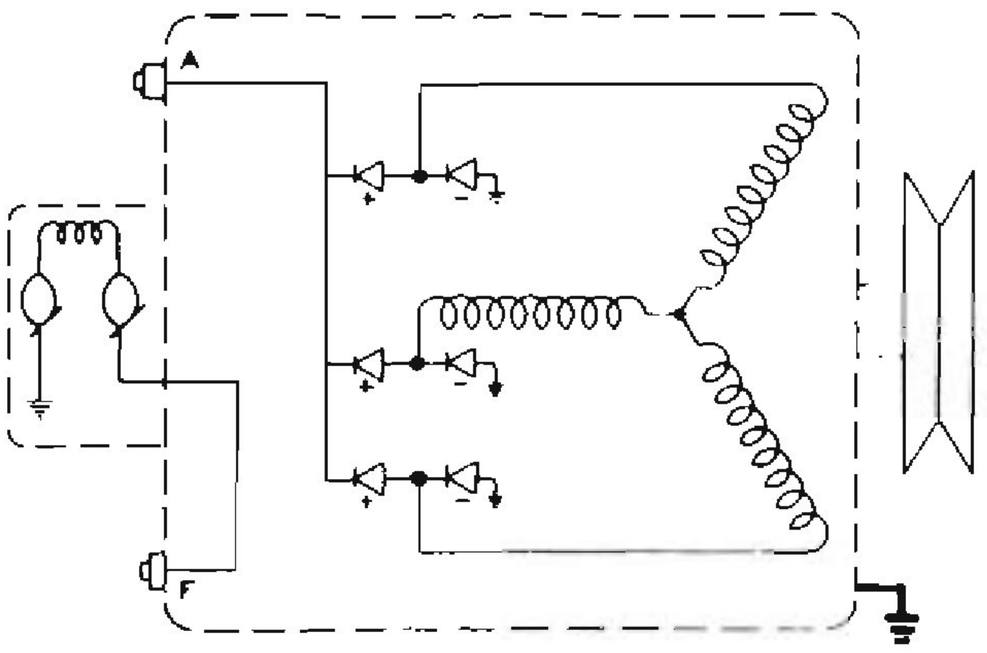

Figure 5.

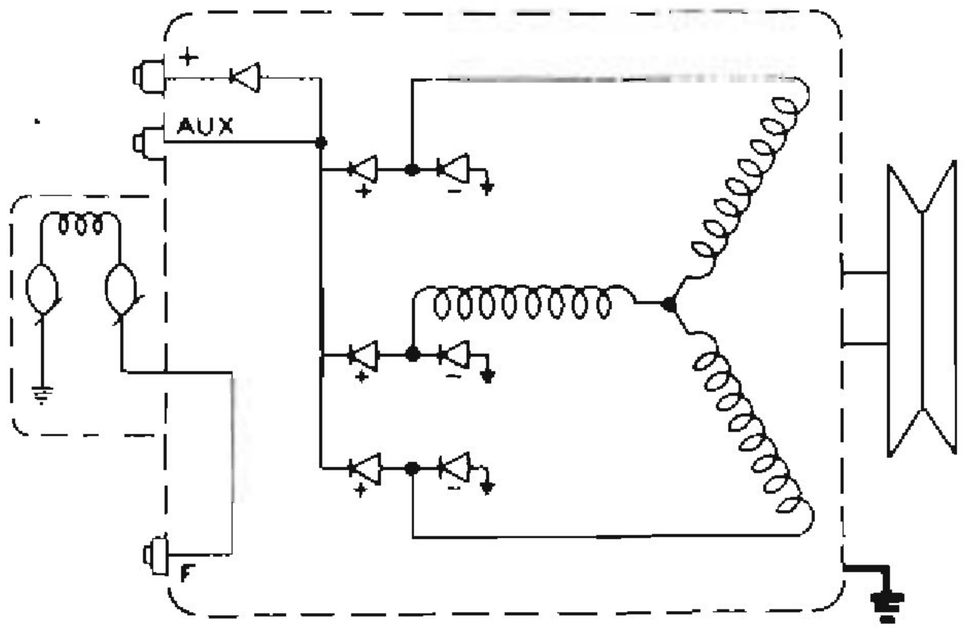

Figure 6.

Printed in U.S.A.