FILE IN THE

GHX

prestolite SERVICE MANUAL

GENERATOR SECTION

(Issued 3-16-78)

VOLTS 12 VENTILATED No RATED OUTPUT 6 Amperes

POLES 2 BRUSHES 2 CONTROL Vibrating Current-Voltage Regulator.

BEARINGS Ball at drive end. Absorbent bronze at commutator end.

ROTATION See Tabulation.

LUBRICATION Periodically add 5 drops of medium engine oil to the End Head Oilers. At overhaul, pack open ball bearings 1/4 to 1/2 full with a good ball bearing lubricant. NOTE - Some ball bearings are sealed. These units are prelubricated and require no additional lubrication.

BRUSH SPRING TENSION 35-53 ounces with new brushes. Brush spring tension is measured with the scale hooked in the hole in the end of the brush arm and pulled on a line perpendicular to the top of the brush. The tension is read just as the arm leaves the brush.

GROUND POLARITY See Tabulation.

COMMUTATOR END HEAD Do not damage the commutator end felt wick when installing the head on the armature shaft. This is best accomplished by removing the wick and re-installing it after the generator is assembled. Be sure wick lies on the bottom of the oil pocket and fill the pocket 1/2 full with light grease.

FIELD COIL DRAW (70°F.) 1.17 to 1.23 amperes at 10.0 volts.

MOTORING DRAW (70°F.) 1.9 to 2.1 amperes at 10.0 volts.
(Have field terminal grounded to frame.)

OUTPUT TEST (70°F.) 14.2 volts, 2.0 amperes at 550 maximum RPM.
15.0 volts, 6.0 amperes at 710 maximum RPM.
Do not operate this type generator at more than 6.0 amperes for any length of time as to do so may result in burned armature and field windings.

Unit	Rotation	Ground Polarity	Internal Wiring
GHX-4801M	CW	Positive	Figure 1.
GHX-4801NM	CW	Negative	Figure 1.
GHX-4802M	CCW	Positive	Figure 2.
GHX-4802NM	CCW	Negative	Figure 2.
GHX-4803	CW	Negative	Figure 1.
GHX-4804	CCW	Negative	Figure 2.

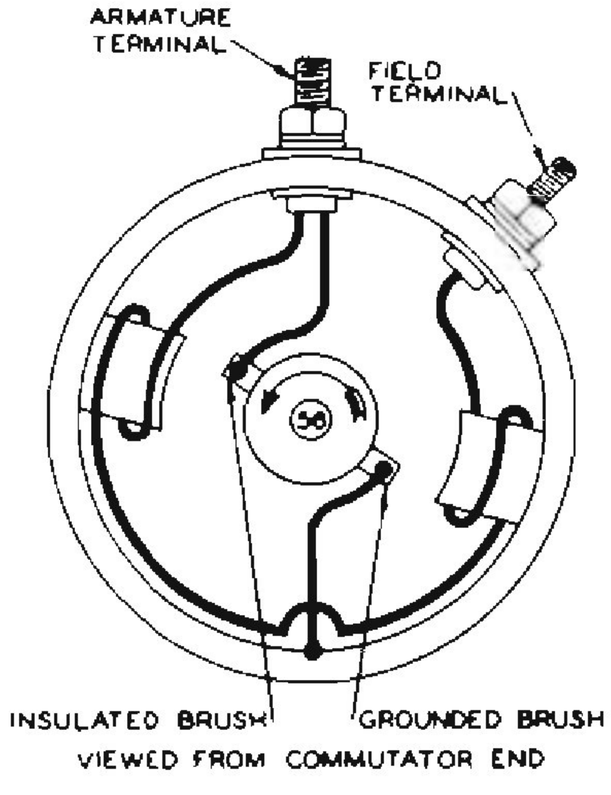

Figure 1.

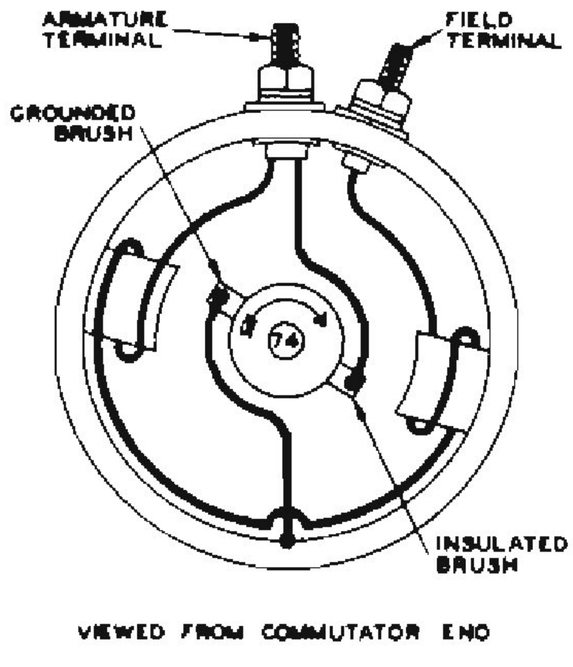

Figure 2.

Printed in U.S.A.