VOLTAGE 12 ROTATION See Tabulation BRUSHES 4 POLES 4

DIAMETER 4"

LUBRICATION — Soak absorbent bronze bearings and felt oiling pads with SAE-20 oil. Allow excess to drain out before asssembling motor.

Cover armature shaft at drive end with a film of lubricant before assembling drive.

BRUSH REPLACEMENT — Replace brushes when they have worn to a length of 1/4" or less.

SPRING TENSION — 42 to 53 ounces with new brushes. Measure with a spring scale hooked under the brush spring at the bend just beyond the brush. Pull the scale on a line opposite the line of force exerted by the brush spring and take the reading just as the spring leaves the brush.

TRANSMISSION — Bendix drive

END PLAY — Adjust to .005" to .062" except as noted in special instructions.

TEST SPECIFICATIONS (77°F/25°C)

	Terminal Voltage	Maximum Amperes	RPM	Torque Ft. Lbs.
No Load Test	10.0	55	5200 Min.	-0-
Stall Torque Test	4.0	235	-0-	5.2

Unit	Rotation	Special Instructions
MBG-4003,A	CCWDE	-------
MBG-4004	CWDE	See Notes 1, 7
MBG-4006	CWDE	See Notes 2, 7, 16
MBG-4007	CCWDE	See Notes 2, 7, 16
MBG-4008,A	CWDE	See Notes 2, 7, 16
MBG-4014	CWDE	See Notes 2, 3, 7
MBG-4015	CWDE	See Notes 2, 3, 7
MBG-4017	CCWDE	See Notes 2, 3, 7
MBG-4018	CCWDE	See Notes 2, 4a, 7
MBG-4019T	CCWDE	See Notes 7, 9
MBG-4021	CCWDE	See Notes 2, 3, 7

prestolite
SERVICE
INFORMATION

Unit	Rotation	Special Instructions
MBG-4023	CCWDE	See Notes 2, 7
MBG-4024	CCWDE	See Notes 2, 7
MBG-4024T	CCWDE	See Notes 2, 7, 9
MBG-4025	CWDE	See Notes 4B, 7, 16
MBG-4026	CWDE	See Note 16
MBG-4103	CWDE	See Notes 4E, 5
MBG-4104A	CCWDE	See Notes 2, 4C, 7
MBG-4104T	CCWDE	See Notes 2, 4C 7, 8
MBG-4105	CWDE	See Notes 2, 3, 4C, 5
MBG-4106	CWDE	See Notes 2, 7, 16
MBG-4107,A,B	CWDE	See Note 5
MBG-4108,A,AS	CWDE	See Notes 2, 5
MBG-4109	CCWDE	-------
MBG-4110	CWDE	See Notes 2, 3, 4C, 5
MBG-4112,A	CCWDE	See Notes 2, 4D, 5
MBG-4113	CWDE	See Notes 2, 4F, 5
MBG-4114,A,As	CWDE	See Notes 2, 3, 5
MBG-4115	CCWDE	See Notes 2, 4C, 5
MBG-4116T	CCWDE	See Notes 2, 3, 7, 9
MBG-4118	CCWDE	See Notes 2, 3, 7
MBG-4119T	CWDE	See Notes 2, 3, 4G, 5, 9
MBG-4120	CCWDE	See Notes 2, 3
MBG-4121	CWDE	See Notes 2, 3
MBG-4122,A,AS	CWDE	See Notes 2, 3, 5
MBG-4124	CCWDE	See Note 6
MBG-4125,A,B	CCWDE	See Note 6, 7, 16
MBG-4126	CWDE	See Notes 2, 4C, 5
MBG-4127,A	CWDE	See Notes 2, 3
MBG-4129	CWDE	-------
MBG-4131	CWDE	See Note 2
MBG-4133	CCWDE	See Notes 2, 4C
MBG-4134,A,B	CCWDE	See Notes 2, 3, 4C, 5, 16
MBG-4134AT	CCWDE	See Notes 2, 3, 4I, 5, 9
MBG-4135	CWDE	See Notes 2, 3, 4I, 5
MBG-4135T	CWDE	See Notes 2, 3, 4G, 5, 9
MBG-4137	CCWDE	See Notes 3, 4J, 7, 13
MBG-4138	CWDE	See Notes 2, 4H, 5, 16
MBG-4139	CCWDE	See Notes 4K, 8, 14
MBG-4140	CCWDE	See Notes 3, 4L, 9, 15
MBG-4141	CCWDE	See Notes 3, 4L, 15
MBG-4141T	CCWDE	See Notes 3, 4L, 9, 15
MBG-4142T	CWDE	See Notes 3, 4M, 5, 9
MBG-4143T	CCWDE	See Notes 3, 4M, 5, 9
MBG-4144	CCWDE	See Notes 3, 4N, 5, 16

Note 1 - The drive end bearing must be flush with the bearing bore on the outer end.

Note 2 - The outer pinion housing bearing must be flush with the bearing bore on the inside of the housing.

Note 3 - The intermediate plate bearing must be flush with the bearing bore on the inside of the housing.

Note 4 - The pinion should be within the limits below when measured from the mounting face of the pinion housing to the outer edge of the pinion just before the pinion drops off the spiral. Adjust with thrust washers on the commutator end of the armature shaft or just inside the intermediate bearing as required. Refer to Parts & Equipment List for thrust washer package.

A- 1-11/16" to 1-29/32"
B - 25/64" to 35/64" (Extended 1-1/8" to 1-19/64")
C - 1-7/32" to 1-11/32" (Extended 1-31/32" to 2-3/32")
D - 1-57/64" to 2-1/64"
E - 1-3/64" to 1-11/64"
F - 1-1/16" to 1-3/16" (Extended 1-13/16" to 1-15/16")
G - 25/32" to 29/32" (Extended 1-17/32" to 1-21/32")
H - 11/16" to 13/16" Extended
I - 1-7/32" to 1-11/32" (Extended 1-55/64" to 2-1/64")
J - 1-3/32" to 1-1/4"
K - 2-3/32" to 2-13/64"
L - 3/16" to 23/64" (Extended 53/64" to 63/64")
M - 25/32" to 15/16" (Extended 1-13/32" to 1-37/64")
N - 1-7/32" to 1-3/8" (Extended 1-55/64" to 2-1/64")

Note 5 - .005" minimum end play on armature.

Note 6 - .005" to .030" end play on armature.

Note 7 - .06" maximum end play on armature.

Note 8 - Before assembling drive, pack bearing cavity in front of drive end head full with approved grease.

Note 9 - After inspection of the various parts, paint terminal stud and brush holder insulation with red glyptol. Cover glyptol and all metal surfaces except pilots, head seats, threads, commutator and bearing surfaces with air-drying, fungus-resistant insulating varnish. Allow varnish to soak into field coils and armature winding; then drain and dry thoroughly before assembling motor.

prestolite.
SERVICE
INFORMATION

Note 10 - Assemble drive end ball bearing with shielded side toward the armature.

Note 11 - End of shaft must be 27/64"-15/32" from face of mounting pad. Use thrust washers on the commutator end as required. Refer to Parts & Equipment List for thrust washer package.

Note 12 - Outside edge of drive gear must be 1-7/64" to 1-13/64" from face to mounting pad. Adjust by installing thrust washers on the armature shaft just inside the commutator end head of intermediate bearing as required. Refer to Parts & Equipment List for thrust washer package.

Note 13 - Torque drive retaining nut to 25 to 30 ft. lbs.

Note 14 - Torque drive retaining nut to 35 to 40 ft. lbs.

Note 15 - Press drive end bearing into bearing bore to a depth of 3/32" from the inside edge of bearing bore. Then press shaft seal in place with seal lip facing the bearing.

Note 16 - After installing new field coils, paint the inside of the frame and soak the field coils with air-drying varnish. Keep varnish off of brush leads, pilot seats and threads. When reusing the old armature, its core and winding should be given the same treatment being careful to keep the commutator and bearing seats clean.

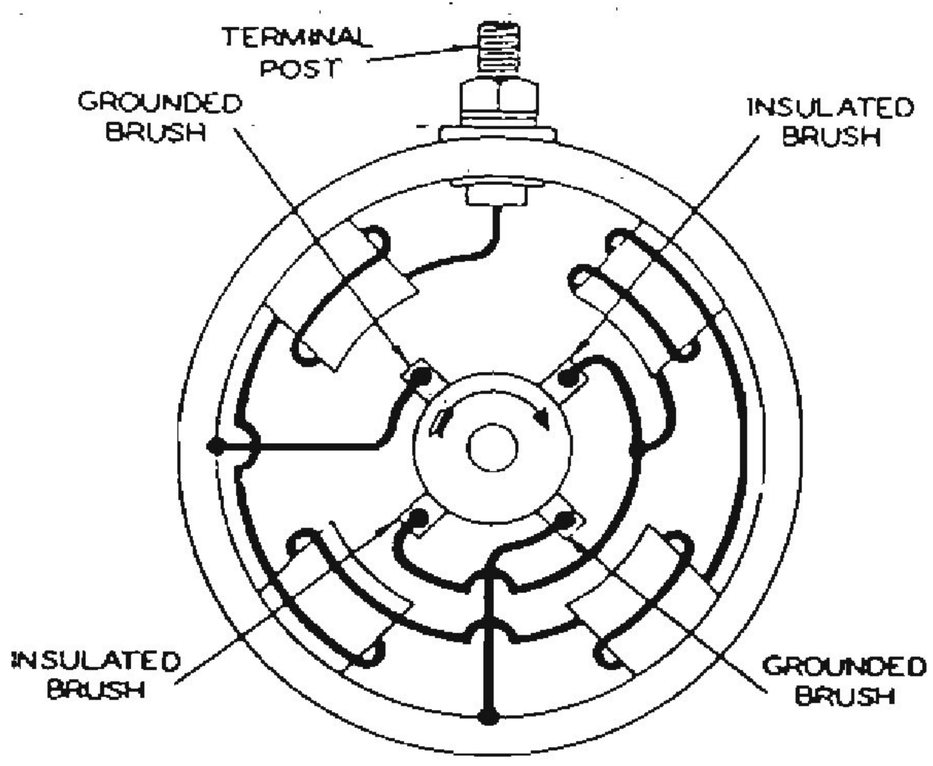

Internal Wiring of
CWDE Motors

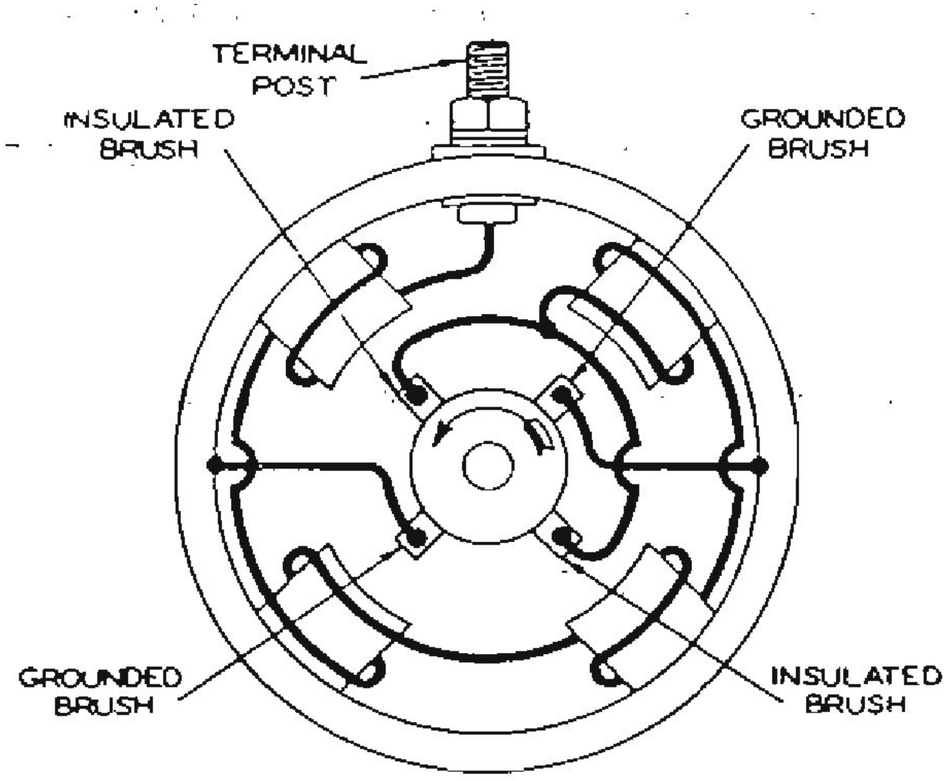

Internal Wiring of
CCWDE Motors

VOLTS 12 ROTATION See Tabulation BRUSHES 4 POLES 4

VENTILATED No FRAME DIAMETER 4"

BEARINGS

Absorbent bronze bearing used at commutator end. See tabulation for type of drive end bearing. Units using ball bearings must have the bearing installed with the shielded side toward the armature.

LUBRICATION

Soak absorbent bronze bearings and felt oiling pad with SAE 20 oil. Allow excess oil to drain out before assembling end head on motor. Pack ball bearings 1/4 to 1/2 full with a good grade ball bearing lubricant.

BRUSH REPLACEMENT

The brushes must be replaced when they have worn to a length of 1/4" or less.

SPRING TENSION

42 to 53 ounces with new brushes. Measure with a spring scale hooked under the brush spring at the brush. Pull the scale on a line opposite the line of force exerted by the brush spring and take the reading just as the spring leaves the brush.

COMMUTATOR END HEAD

MBG-4111 - Install the end head so that the letter "R" is directly in the line with the motor terminal.

MBG-4123 and 4136 - Install the end head so that the letter "L" is directly in line with the motor terminal.

END PLAY

Adjust to .005" minimum with thrust washers on the commutator end of the armature. On the MBG-4022, 4111 and 412 maintain a dimension of 27/64" to 15/32" from the end of the armature shaft to the mounting surface of the drive end head to assure correct pump alignment.

TEST SPECIFICATIONS

	(77°F) Terminal Voltage	Maximum Amperes	RPM	Torque Ft. Lbs.
No Load Test	10	55	5200 Min.	----
Stall Torque Test	6	325	0	9.8

prestolite.
SERVICE
INFORMATION

Unit	Rotation	D.E. Bearing	Internal Wiring
MBG-4022	CCWDE	Ball	Figure 1
MBG-4111	CCWDE	Ball	Figure 2
MBG-4123	CWDE	----	Figure 3
MBG-4128	CCWDE	Ball	Figure 1
MBG-4136	CWDE	Bronze	Figure 3

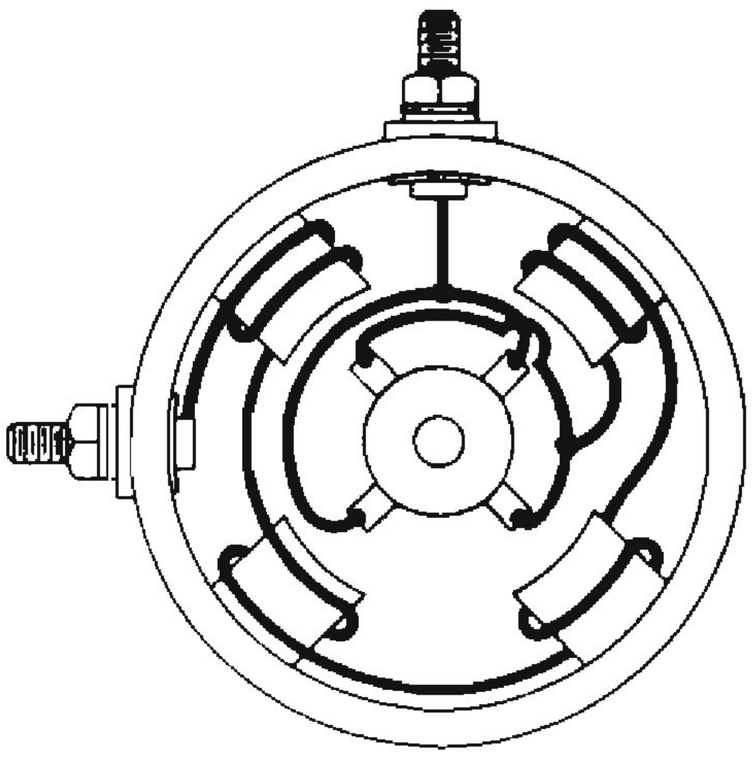

VIEWED FROM COMMUTATOR END

Figure 1

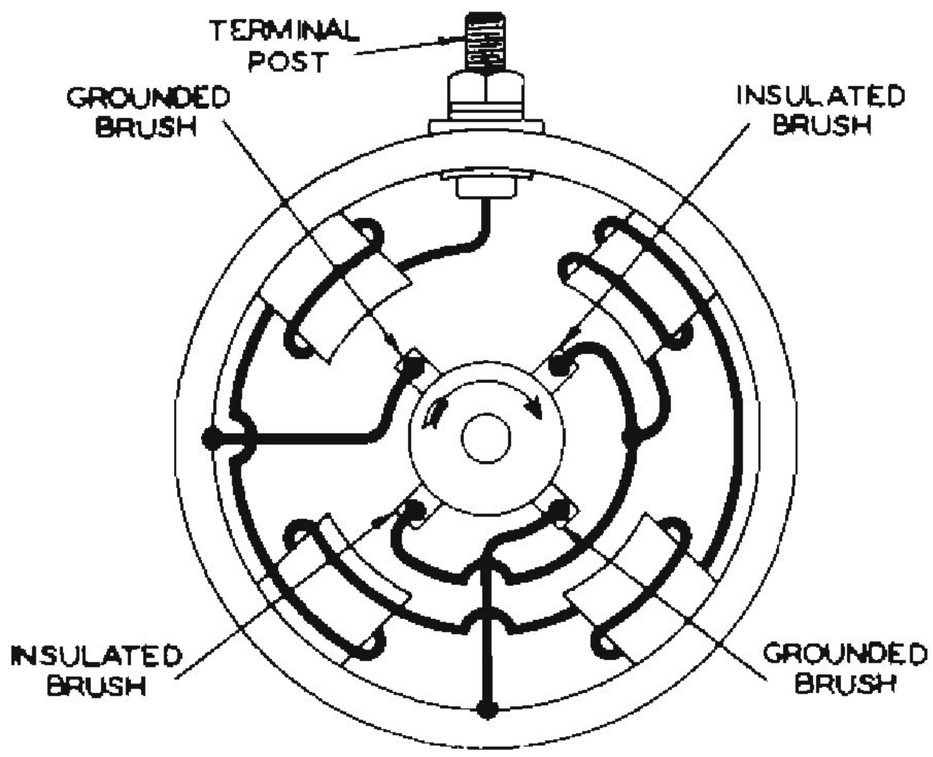

VIEWED FROM COMMUTATOR END

Figure 2

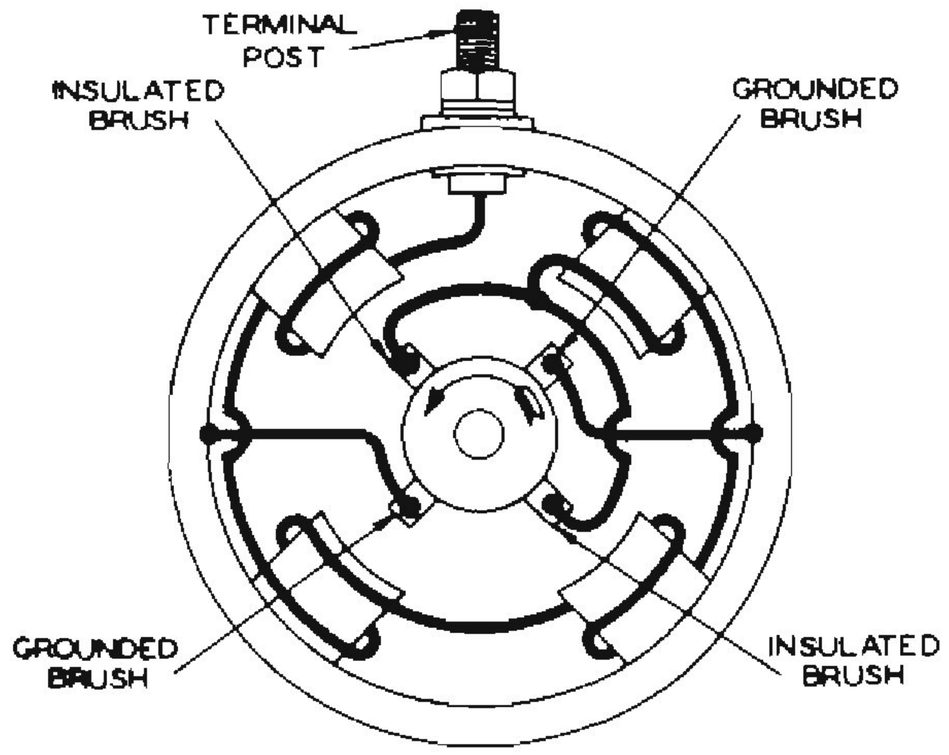

VIEWED FROM COMMUTATOR END

Figure 3