ROTATION CWDE VOLTS 12 POLES 4 BRUSHES 8

DIAMETER 5"

LUBRICATION At overhaul, all bronze bearings should be well lubricati with medium engine oil.

Cover armature shaft at Drive End with a film of lubricar before assembling drive.

STARTING SWITCH See Tabulation.

BRUSH SPRING TENSION 52 to 65 ounces with new brushes. Measure with scale hooked under the brush spring at the bend. Pull on a line parallel with the face of the brush and take the reading just as the spring leaves the brush.

END PLAY .005" to .040" Use one or more MBC-311 thrustwashers on the armature shaft between the armature and the intermediate bearing as needed.

TRANSMISSION Clutch type Bendix. Do not dip Bendix in grease solvent and do not alter clutch setting. It is recommended that this type clutch be returned to Eclipse Machine Division of Bendix Aviation Corporation, Elmira, N. Y., if in need of service.

COMMUTATOR END HEAD Be sure oiling felt pad is in the outer end of the commutator end head before assembling the head on the motor.

TEST SPECIFICATONS

No Load Draw 10.0 volts, 130 maximum amperes, 4700 minimum RPM.
Stall Torque 4.0 volts, 1300 maximum amperes, 33 minimum Lbs. Ft.

Unit	Starting Type	Switch Mounted	Internal Wiring	Special Instructions
MCK-4001		Separate	Fig. 1	See Note 1
MCK-4002		Separate	Fig. 2+	See Notes 1,2
MCK-4003		Separate	Fig. 1+	See Note 1
MCK-4004	Solenoid	On Motor	Fig. 1	See Note 1
MCK-4005	Solenoid	On Motor	Fig. 2	See Notes 1,3
MCK-4006	Solenoid	On Motor	Fig. 1	See Notes 1,3
MCK-4007,S	Solenoid	On Motor	Fig. 2	See Notes 1,3
MCK-4008	Solenoid	On Motor	Fig. 1	See Note 1
MCK-4009		Separate	Fig. 1	See Note 1
MCK-4010, S		Separate	Fig. 1	See Note 1
MCK-4011	Solenoid	On Motor	Fig. 1	See Note 1
MCK-4012	Solenoid	On Motor	Fig. 2	See Notes 1,3

prestolite.
SERVICE
INFORMATION

‡Before code date 11M (Nov. 1957), internal wiring was Figure 1.

Note 1 - The intermediate bearing must be flush with bearing bore on the inner end.

Note 2 - .005" to .030" end play. Use MU-54 or MU-54B thrustwashers on the commutator end of the shaft between the commutator and MAK-61 steel washer as needed.

Note 3 - .005" to .040" end play. Use MCK-22 or MCK-22A thrustwashers on the armature shaft between the armature and intermediate bearing as needed.

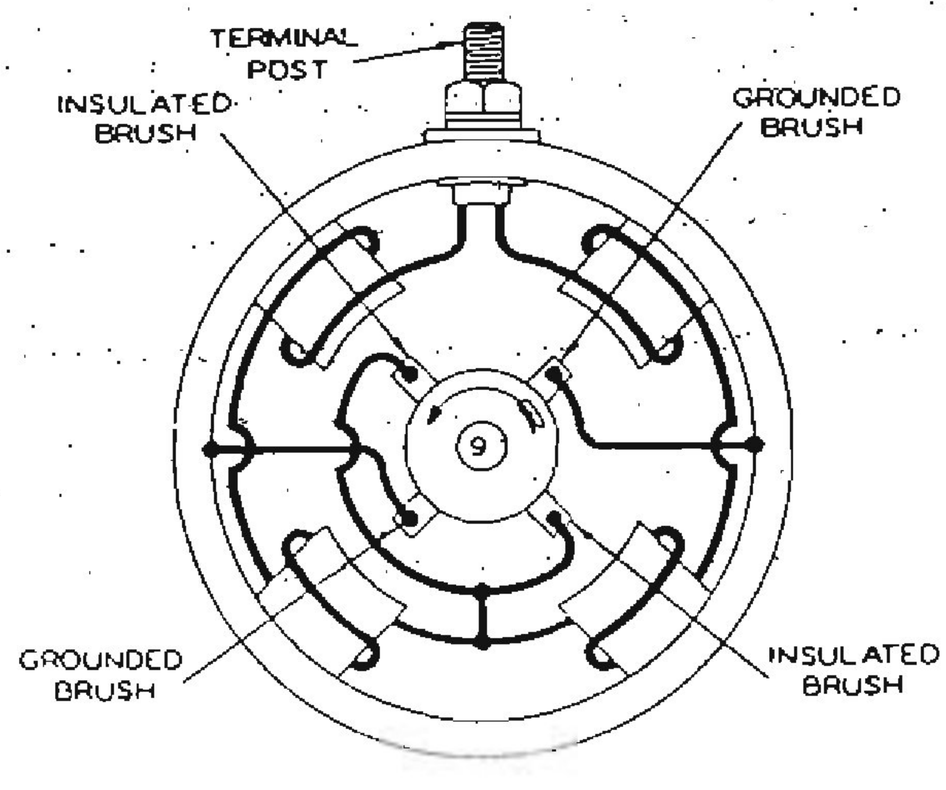

VIEWED FROM COMMUTATOR END

Figure 1.

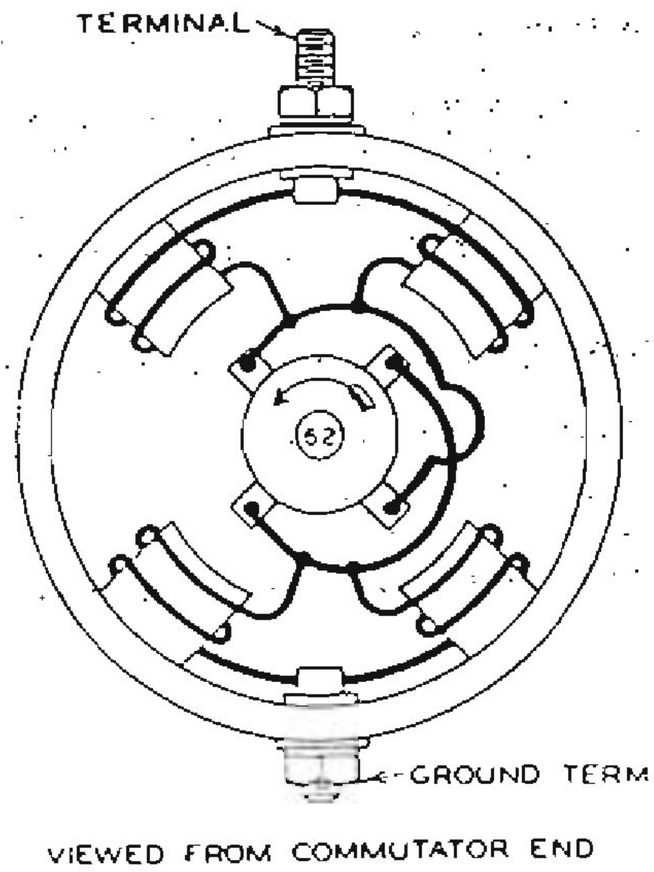

VIEWED FROM COMMUTATOR END

Figure 2.

VOLTAGE 12

ROTATION CWDE BRUSHES 8 POLES 4 DIAMETER 5-3/16"

LUBRICATION

Soak absorbent bronze bearings and felt oiling wicks in SAE 20 oil. Allow excess oil to drain out before assembling end head on motor. After assembly fill oil cups full with SAE 20 oil.

Lubricate all "O" rings with film of light grease. Lubricate shaft and spline with recommended grease before assembling drive on shaft .

BRUSH REPLACEMENT

Replace brushes when they have worn to a length of 5/16" or less.

SPRING TENSION

52 to 65 ounces with new brushes. Measure with a spring scale hooked under the brush spring at the brush. Pull the scale on a line opposite the use of force exerted by the brush spring and take the reading just as the spring leaves the brush.

END PLAY

Adjust to .005" to .030" maximum with thrust washers at commutator end. Refer to Parts & Equipment List for thrust washer package.

TRANSMISSION

Positork drive.

SHIFTING SOLENOID ADJUSTMENT

With the solenoid energized with a 6 volt source, and the solenoid plunger sealed adjust movable core assembly to give .020" to .050" clearance between drive sleeve and thrust surface with solenoid sealed and pinion pushed toward commutator end.

SWITCH ACTION TEST

To test switch action, place a steel spacer (see illustration for dimensions) over the armature shaft between the pinion and the thrust washer next to the outer pinion housing bearing. With this spacer in place, the magnetic switch should bottom and the switch contacts should close at 8 volts.

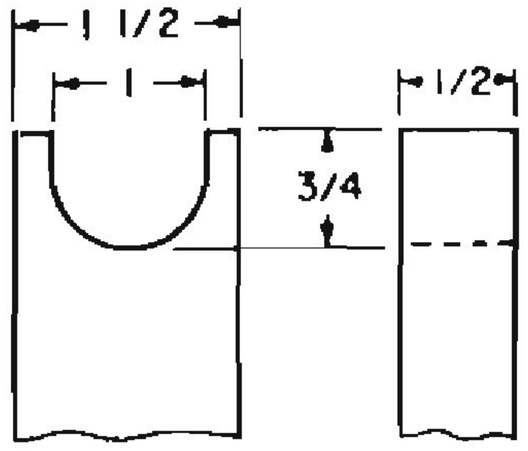

prestolite.
SERVICE
INFORMATION

TEST SPECIFICATONS (77°F/25°C)

	Terminal Voltage	Maximum Amperes	RPM	Torque Ft. Lbs.
No Load Test	10.0	130 max.	4700 min.	-0-
Stall Torque Test	4.0	1300 max.	-0-	33 min.

Unit	Pinion Position[xx]	Special Instructions
MCK-6001	2-33/64" to 2-19/32"	1,2,3
MCK-6002	2-32/64" to 2-19/32"	1,2,3

xx This dimension is measured from the face of the mounting flange to the outside edge of the pinion when in "at rest" position. However, this position cannot be adjusted and is to be used as a reference dimension to assure correct starting motor assembly.

Note 1 - After inspection of various parts, paint terminal stud and brush holder insulation with red glyptol. Cover glyptol and all metal surfaces except pilots, head seats, threads, commutator and bearing surfaces with air drying, fungus resistant insulating varnish. Allow varnish to soak into field coils and armature windings. Drain and dry thoroughly before assembling the motor.

Note 2 - The pinion housing bearing must be flush with the bearing bore on the inside of the housing.

Note 3 - Seal shifting linkage cover with a good grade of sealant.

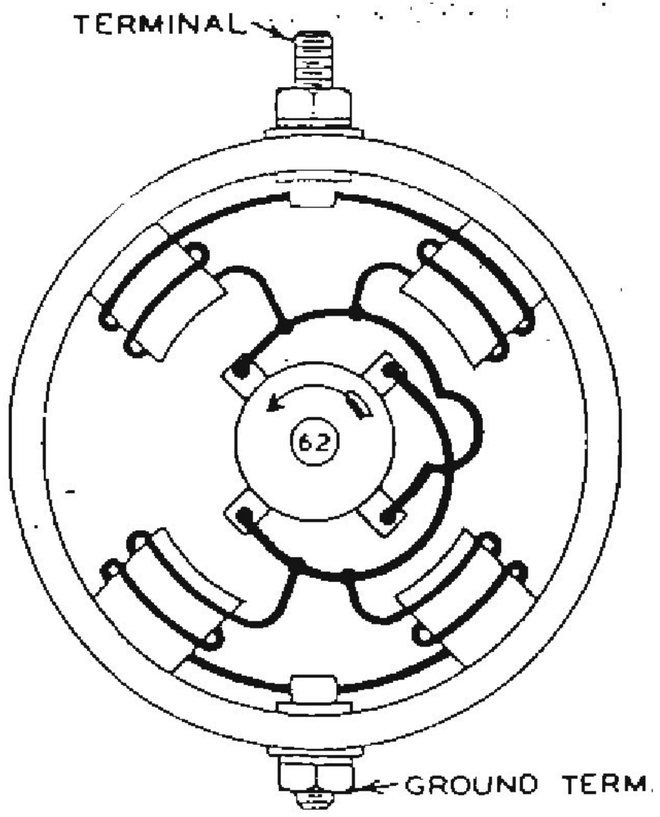

VIEWED FROM COMMUTATOR END