VOLTAGE 12 ROTATIONS CWDE BRUSHES 8 POLES 4

DIAMETER 5-3/16"

**LUBRICATION**

At overhaul, soak new bearings in SAE 20 oil before installing in bearing bore. Lubricate the bearing surfaces of the armature shaft with SAE 10 oil when assembling motor. Lubricate the armatue shaft and splines with light grade graphite grease before installing the drive assembly.

**BRUSH REPLACEMENT**

Replace brushes when they have worn to a length of 3/8" or less.

**SPRING TENSION**

52 to 65 ounces with new brushes. Measure with a spring scale hooked under the brush spring at the brush. Pull the scale on a line opposite the line of force exerted by the brush spring and take the reading just as the spring leaves the brush.

**TRANSMISSION**

Mag. clutch.

**END PLAY**

Adjust to .005 to .030 with thrust washers on the commutator end of the shaft. Refer to Parts & Equipment List for thrust washer package.

**SWITCH ACTION TEST**

Energize solenoid with a 6 volt source between solenoid terminal and motor terminal. Adjust movable core assembly to give a 1/16"-3/64" clearance between drive sleeve and thrust surface with solenoid sealed and pinion pushed toward commutator end.

To test switch action, slip a steel spacer (See illustration for dimensions) over the armature shaft between the pinion and the pinion stop. With this spacer in place, the magnetic switch should bottom and the switch contacts should close under normal voltages.

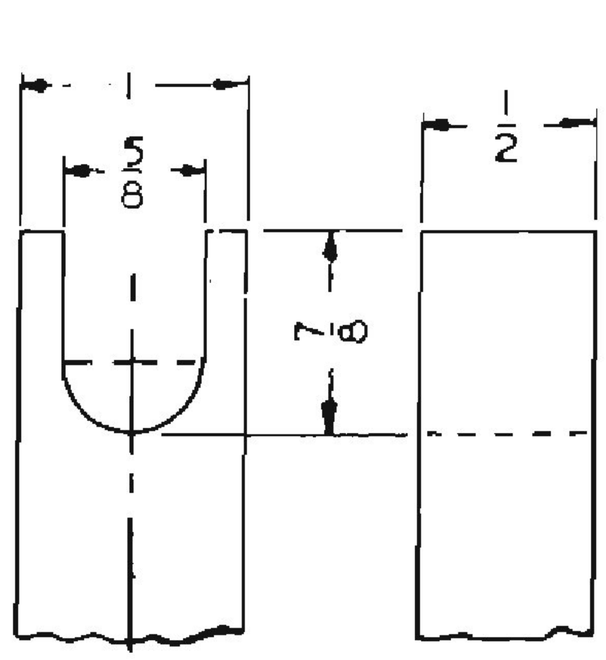

prestolite.
SERVICE
INFORMATION

TEST SPECIFICATIONS (77°F/25°C)

| | Terminal Voltage | Maximum Amperes | RPM | Torque Ft. Lbs. |
|---|---|---|---|---|
| No Load Test | 10.0 | 121 | 4700 | -0- |
| Stall Torque Test | 1.0 | 330 | -0- | 5.0 |

| Unit | Special Notes |
|---|---|
| MEU-6001 | Notes 1,2,3 |

Note 1 - Pinion position at rest 2-9/16"±3/64", measured from mounting face to the edge of pinion.

Note 2 - The intermediate bearing must be flush with the bearing bore nearest the armature.

Note 3 - The pinion housing bearing must be flush with the bearing bore on the inside of the housing.

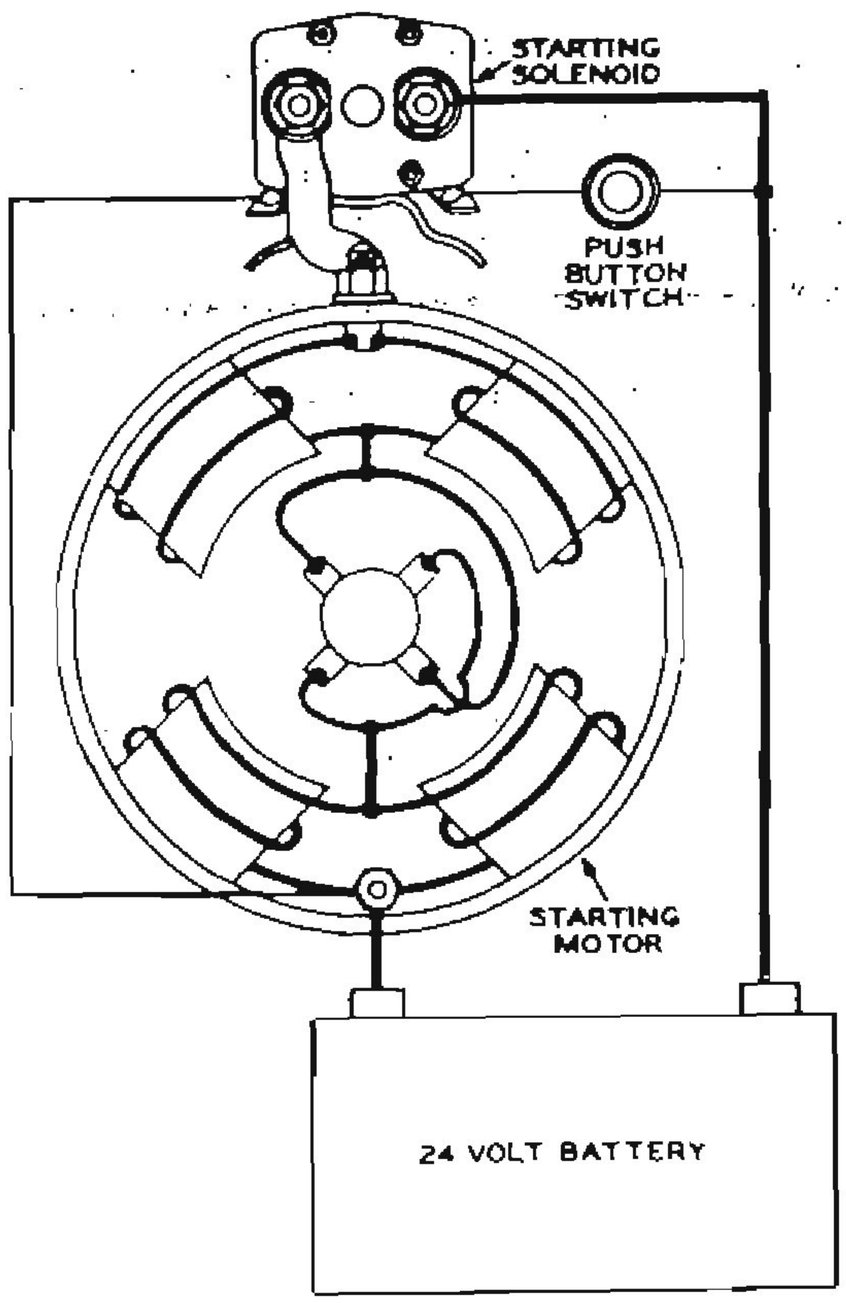


Wiring Diagram

# prestolite SERVICE MANUAL

STARTING MOTOR SECTION (Issued 3-16-78)

VOLTS 12 ROTATION See Tabulation BRUSHES 4 POLES 4

**LUBRICATION**

At overhaul, soak new bearings in SAE #20 oil before installing in bearing bore. Lubricate the bearing surfaces of the armature shaft with SAE #10 oil when assembling motor. Lubricate the armature shaft and splines with a light grade graphite grease before installing the drive assembly.

**STARTING SWITCH**

Shifting solenoid. Coaxially mounted inside the pinion housing.

**BRUSH SPRING TENSION**

52 to 65 ounces with new brushes. Measure with a spring scale hooked under the brush spring as near to the brush as possible. Pull the scale on a line opposite the line of force exerted by the brush spring and take the reading just as the spring leaves the brush.

**TRANSMISSION**

Overrunning clutch.

**COMMUTATOR END HEAD**

Make sure the felt oiling pad is in the outer end of the bearing before assembling the end head on the motor.

**ARMATURE END PLAY**

Adjust to .005" to .030" with thrust washers on the commutator end of the shaft. Refer to Parts and Equipment List for thrust washer package.

**SWITCH CONTACT HEIGHT**

Adjust to .50" to .55" using the PT-I gauge or a gauge cut to the dimensions shown in Figure 1. Make sure the cover gasket is removed. Adjust by bending the contact support. (Refer to service bulletin SM-11).

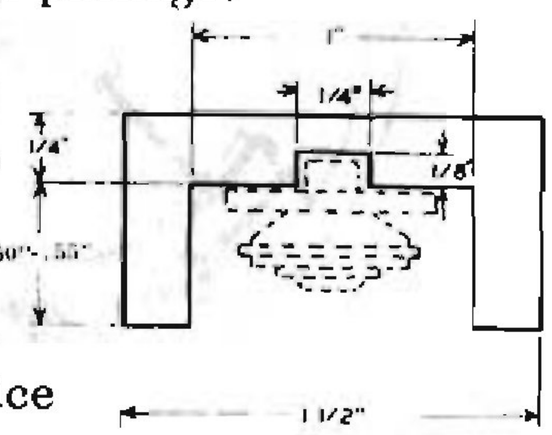

Figure 1.

**TEST SPECIFICATIONS** (77°F.)

| | |
|---|---|
| No Load Draw* | 10.0 volts, 143 maximum amperes, 4700 minimum RPM. |
| Stall Torque* | 2.0 volts 635 maximum amperes, 16.0 minimum Ft. Lbs. |

*Includes solenoid current draw.

Printed in U.S.A.

SOLENOID SPECIFICATIONS (77°F.)

Coil Draw — 20.0 to 22.7 amperes at 10.0 volts.

Closing Voltage — The contacts should close at 8.0 volts maximum with a 1/2" interference block between the drive pinion and pinion stop.

| Unit | Rotation | Pinion Position** | Special Instructions |
|---|---|---|---|
| MEU-8001A | CWDE | 1 53/64" to 1 61/64" | |
| MEU-8002A | CCWDE | 1 53/64" to 1 61/64" | |
| MEU-8003A, B | CWDE | 1 53/64" to 1 61/64" | |
| MEU-8003C | CWDE | 1 53/64" to 1 61/64" | See Note 1. |

**This dimension is measured from the face of the mounting flange to the outside edge of the pinion when in the "at rest" position. However, this dimension cannot be adjusted and is to be used as a reference dimension to assure correct starting motor assembly.

NOTE 1. - After the motor has been completely assembled and tested, seal the end of the switch cover adjacent to the frame and field assembly, and around the switch cover base with a good grade sealant.

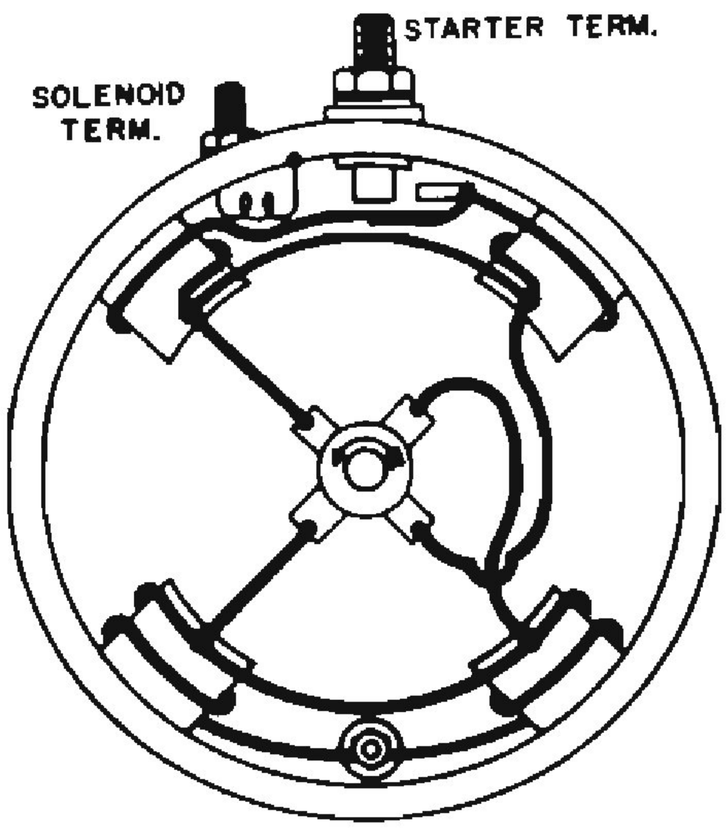


VIEWED FROM COMMUTATOR END

Internal Wiring of CWDE Motor

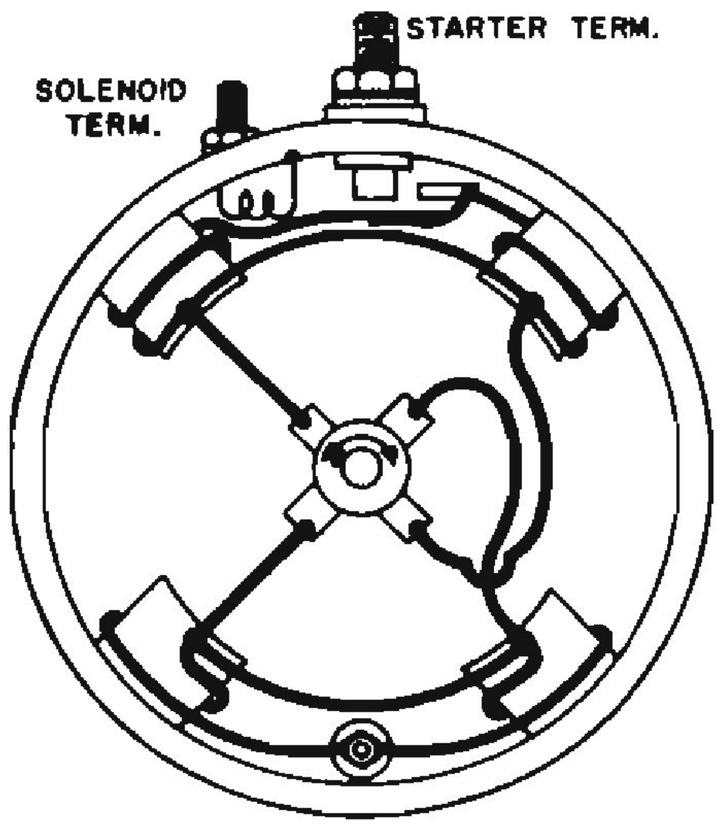


VIEWED FROM COMMUTATOR END

Internal Wiring of CCWDE Motor