VOLTAGE 24 ROTATION See Tabulation BRUSHES See Tabulation POLES 4

DIAMETER 5-3/16"

LUBRICATION — At overhaul, soak all bearings in SAE 20 oil before assembling. Apply a film of light grease to the armature shaft and splines before installing the drive assembly. Apply a film of light grease on the "O" ring seals to prevent damaging them during assembly.

BRUSH REPLACEMENT — Replace brushes when they have worn to a length of 3/8" or less.

SPRING TENSION — See tabulation for tension with new brushes. Measure with a spring scale hooked under the brush spring at the brush. Pull the scale on a line opposite the line of force exerted by the brush spring and take the reading just as the spring leaves the brush.

TRANSMISSION — Mag. clutch.

END PLAY — Adjust to .005" to .030" with thrust washers on the commutator end of the armature shaft. Refer to Parts & Equipment List for thrust washer package.

SHIFTING SOLENOID ADJUSTMENT — With the solenoid energized and the plunger sealed, a clearance of .020" to .050" should be maintained between the outside edge of the pinion drive sleeve and the thrust washer with the pinion pushed toward the commutator end. Adjust by removing the plug in the end of the shifting linkage cover and turning the adjusting nut in or out as required.

SWITH ACTION TEST — To test switch action, place a steel spacer (See illustration for dimensions over the armature shaft between the pinion and the thrust washer. Switch contacts should close at 16.0 volts maximum.

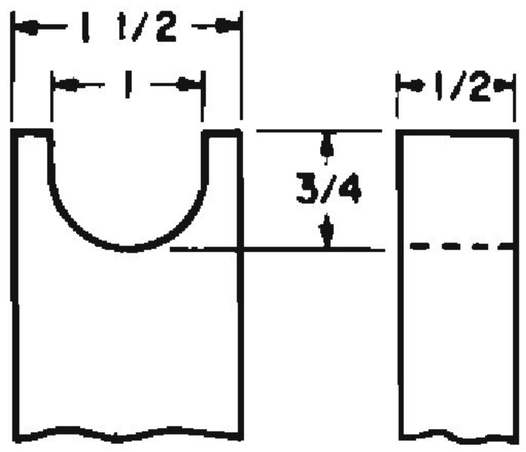

TEST SPECIFICATIONS ($77^{o}F/25^{o}$)

	Terminal Voltage	Maximum Amperes	RPM	Torque Ft. Lbs.
No Load Test	20.0	65	5000	-0-
Stall Torque Test	4.0	400	-0-	22.0

Printed in U.S.A.

prestolite
SERVICE
INFORMATION

SPECIAL NOTE: If the mounting flange is removed from the intermediate housing, the housing and flange should be marked so that it is reassembled in its original position. Torque flange retaining bolts to 8 Ft. Lbs.

SOLENOID SPECIFICATIONS (70°F.)

Shunt winding current draw - 4.1 to 4.8 amperes at 12.0 volts.
Series winding current draw - 23.2 to 26.6 amperes at 12.0 volts.
Shunt winding connected from switch terminal to ground terminal.
Series winding connected from switch terminal to motor terminal.

Unit	Rot.	Brushes	Spring Tension	Pinion Position*	Special Notes
MFY-6101,AUT,BUT,IUT,KUT	CWDE	8	42 to 53 oz.	1-51/64"-1-7/8"	Notes 1,2,3
MFY-6104,CUT,KUT,DUT	CWDE	8	42 to 53 oz.	1-51/64"-1-7/8"	Notes 1,2,3
MFY-6201,A,I,K,	CWDE	4	80 to 90 oz.	1-51/64"-1-7/8"	Notes 1,2
MFY-6301	CWDE	8	42 to 53 oz.	2-33/64"-2-19/32"	Notes 1,2
MFY-6401,A,I,K,L	CWDE	4	80 to 90 oz.	1-51/64"-1-7/8"	Notes 1,2
MFY-6402	CCWDE	4	80 to 90 oz.	1-51/64"-1-7/8"	Notes 1,2
MFY-6501,CUT,EUT	CWDE	8	42 to 53 oz.	1-51/64"-1-7/8"	Notes 1,2,3

*This dimension is measured from the face of the mounting flange to the outside edge of the pinion when in the "at rest" position.

Note 1 - The intermediate bearing must be flush with the inside bearing bore on the side toward the armature. The oil seal should be flush with the edge of the casting.

Note 2 - The pinion housing bearing must bottom against the flange on the inside of the housing.

Note 3 - After inspection of various parts, paint terminal studs and brush holder insulation with red glyptol. Cover glyptol and all metal surfaces except pilots, head seats, threads, commutator, and bearing surfaces with an air-drying, fungus-resistant insulating varnish. Allow varnish to soak into field coils and armature windings. Drain and dry thoroughly before assembling the motor.

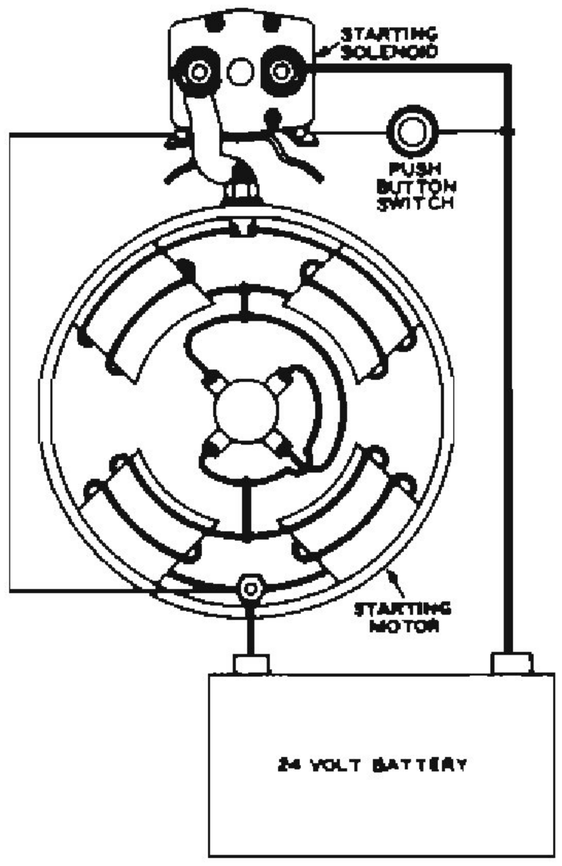

VIEWED FROM COMMUTATOR END

Internal Wiring of
CWDE Type Motors

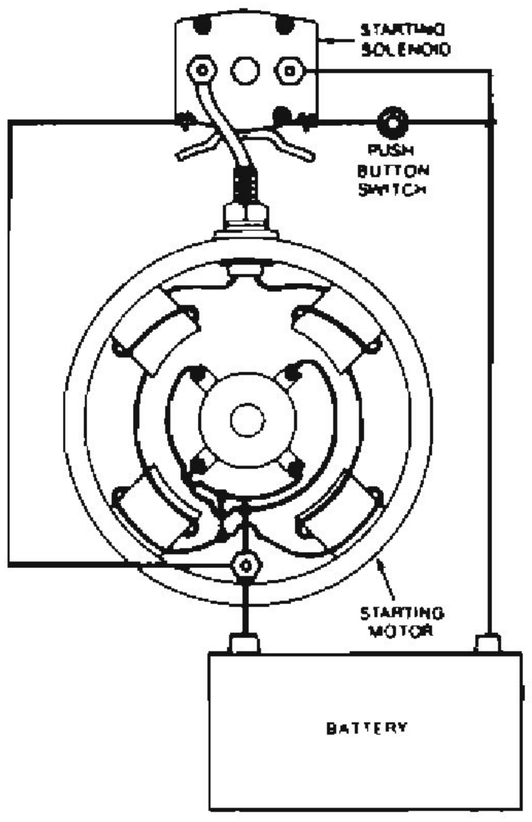

VIEWED FROM COMMUTATOR END

Internal Wiring of
CCWDE Type Motors

VOLTAGE 24 ROTATION CWDE BRUSHES 4 POLES 4

DIAMETER 5-3/16"

LUBRICATION

At overhaul, soak all bearings in SAE 20 oil before assembling. Apply a film of light grease to the armature shaft and splines before installing the drive assembly. Apply a film of light grease on the "O" ring seals to prevent damaging them during assembly.

BRUSH REPLACEMENT

Replace brushes when they have worn to a length of 3/8" or less.

SPRING TENSION

42-53 ounces with new brushes. Measure with a spring scale hooked under the brush spring at the brush. Pull the scale on a line opposite the line of force exerted by the brush spring and take the reading just as the spring leaves the brush.

TRANSMISSION

Mag. clutch.

END PLAY

Adjust to .005" to .030" with thrust washers on the commutator end of the armature shaft. Refer to Parts & Equipment List for thrust washer package.

SHIFTING SOLENOID ADJUSTMENT

With the solenoid energized and the plunger sealed, a clearance of .020" to .050" should be maintained between the outside edge of the pinion drive sleeve and the thrust washer with the pinion pushed toward the commutator end. Adjust by removing the plug in the end of the shifting linkage cover and turning the adjusting nut in or out as required.

SWITCH ACTION TEST

To test switch action, place a steel spacer (See illustration for dimensions) over the armature shaft between the pinion and the thrust washer. Switch contacts should close at 16.0 volts maximum.

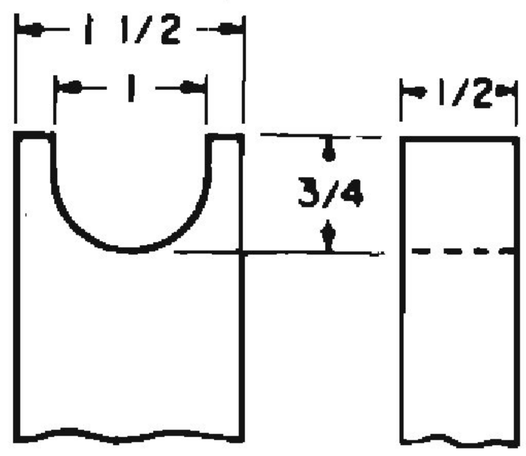

TEST SPECIFICATIONS (77°F/25°C)

	Terminal Voltage	Maximum Amperes	RPM	Torque Ft. Lbs.
No Load Test	20.0	65	5000	0
Stall Torque Test	4.0	400	0	22.0

prestolite.
SERVICE
INFORMATION

SPECIAL NOTE: If the mounting flange is removed from the intermediate housing, the housing and flange should be marked so that it is reassembled in its original position. Torque flange retaining bolts to 8 ft. lbs.

SOLENOID SPECIFICATIONS (70°F)

Shunt winding current draw - 4.1 to 4.8 amperes at 12.0 volts.
Series winding current draw - 23.2 to 26.6 amperes at 12.0 volts.
Shunt winding connected from switch terminal to ground terminal.
Series winding connected from switch terminal to motor terminal.

PINION POSITION 1-51/64" - 1-7/8", this dimension is measured from the face of the mounting flange to the outside edge of the pinion when in the "at rest" position.

Note 1 - The intermediate bearing must be flush with the inside bearing bore on the side toward the armature. The oil seal should be flush with the edge of the casting.

Note 2 - The pinion housing bearing must bottom against the flange on the inside of the housing.

Note 3 - After inspection of various parts, paint terminal studs and brush holder insulation with red glyptol. Cover glyptol and all metal surfaces except pilots, head seats, threads, commutator, and bearing surfaces with an air-drying, fungus-resistant insulating varnish. Allow varnish to soak into field coils and armature windings. Drain and dry thoroughly before assembling the motor.

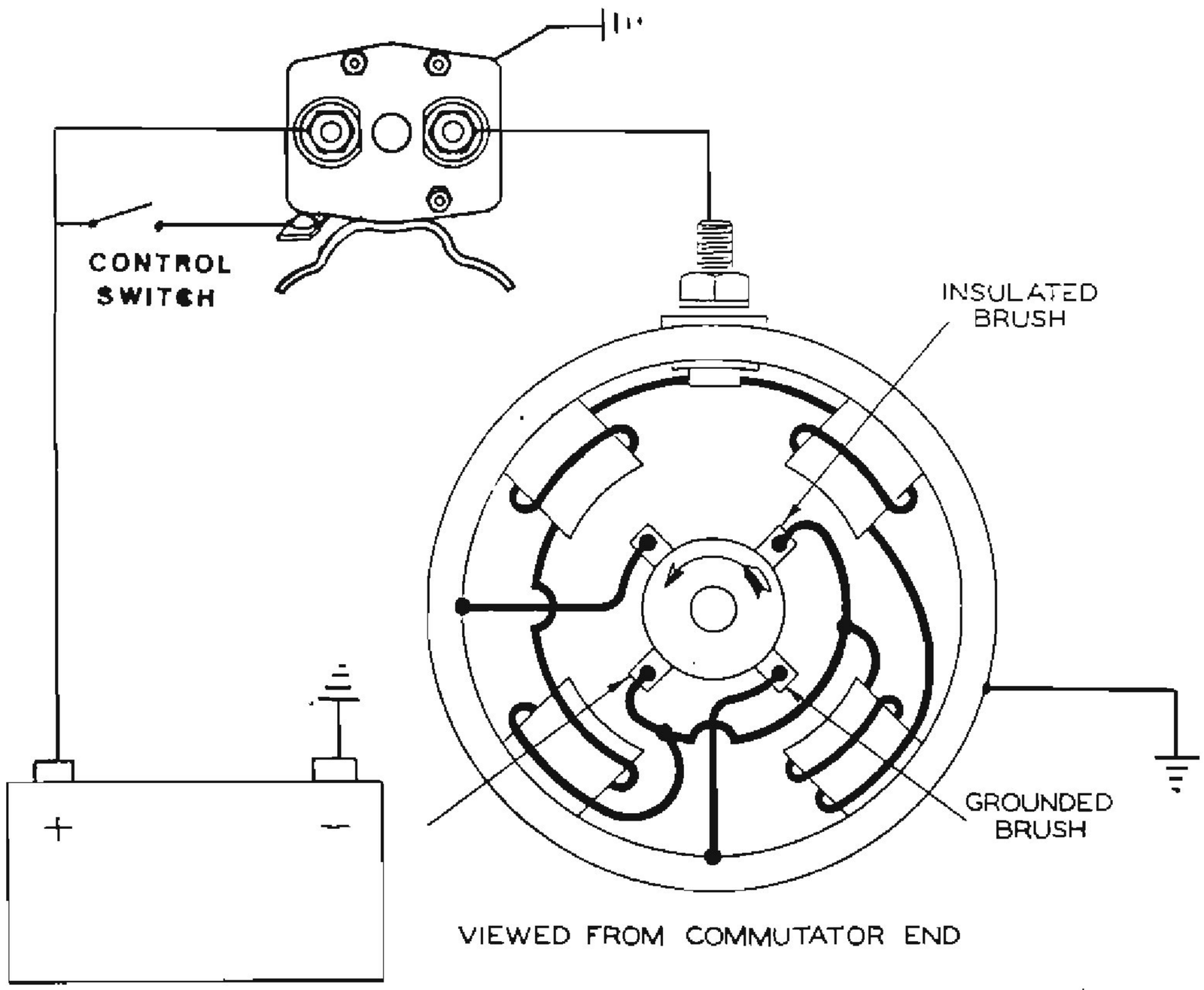

VOLTS 24 ROTATION CWDE BRUSHES 8 POLES 4

DIAMETER 5-3/16"

LUBRICATION — At overhaul, soak new bearings in SAE-20 oil before installing in the bearing bore. Lubricate the bearing surfaces of the armature shaft with SAE-10 oil when assembling motor. Lubricate the armature shaft and splines with a light grade graphite grease before installing the drive assembly.

BRUSH REPLACEMENT — Replace brushes when they have worn to a length of 3/8" or less.

BRUSH SPRING TENSION — 42 to 53 ounces with new brushes. Measure with a spring scale hooked under the brush spring as near to the brush as possible. Pull the scale on a line opposite the line of force exerted by the brush spring and take the reading just as the spring leaves the brush.

TRANSMISSION — Overrunning clutch.

COMMUTATOR END HEAD — Make sure the felt oiling pad is in the outer end of the bearing before assembling the end head on the motor.

ARMATURE END PLAY — Adjust to .005" to .030" with thrust washers on the commutator end of the shaft. Refer to Parts & Equipment List for thrust washer package.

SWITCH CONTACT HEIGHT — Adjust to .50" to .55" using the PT-1 gauge or a gauge cut to the dimensions shown in Figure 1. Make sure the cover gasket is removed. Adjust by bending contact support. (Refer to service bulletin SM-11).

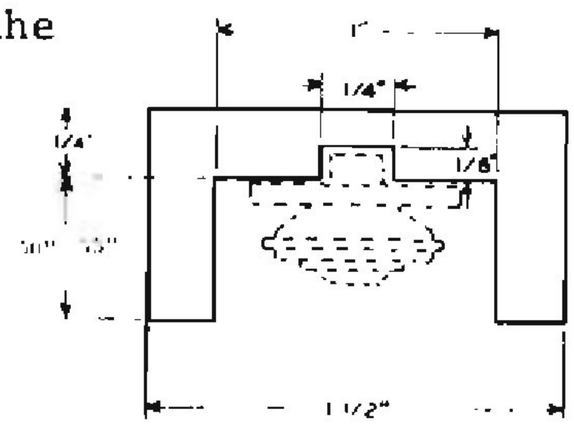

Figure 1.

TEST SPECIFICATIONS (77°F.)

No Load Draw*	20.0 volts, 88 maximum amperes, 5000 minimum RPM.
Stall Torque*	4.0 volts, 403 maximum amperes, 22 minimum Ft. Lbs.

*Includes solenoid current draw.

prestolite.
SERVICE
INFORMATION

SOLENOID SPECIFICATIONS (77°F.)

Coil Draw	11.4 to 12.9 amperes at 20.0 volts.
Closing Voltage	The contacts should close at 16.0 volts maximum with a 1/2" interference block between the drive pinion and pinion stop.

SWITCH COVER

After the motor has been completely assembled and tested, seal the end of the switch cover adjacent to the frame and field assebmly, and around the switch cover base with a good grade sealant.

Unit	Pinion position**	Special Instructions
MFY-8001AT	1-53/64"-1-61/64"	See Note 1
MFY-8001B,C	1-53/64"-1-61/64"	
MFT-8002AT	1-53/64"-1-61/64"	See Note 1

**This dimension is measured from the face of the mounting flange to the outside edge of the pinion when in the "at rest" position. However, this dimension cannot be adjusted and is to be used as a reference dimension to assure correct starting motor assembly.

Note 1 - After inspection of the various parts, paint terminal stud and brush holder insulation with red glyptol. Cover glyptol and all metal surfaces except pilots, head seats, threads, commutator, and bearing surfaces with an air-drying, fungus-resistant varnish. Allow varnish to soak into field coils and armature windings; drain and dry thoroughly before assembling motor.

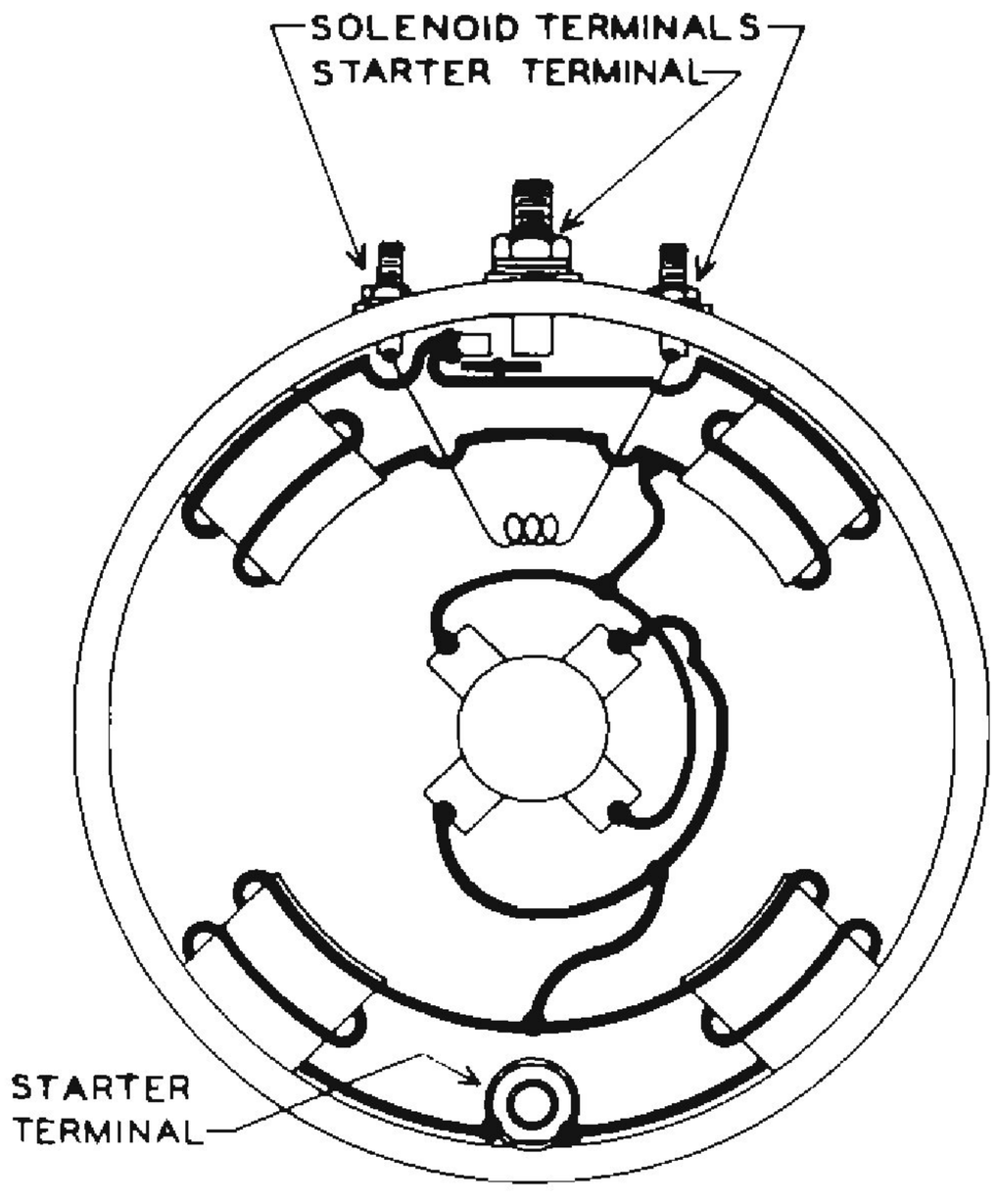

VIEWED FROM C.E. HEAD

VOLTAGE 24 ROTATION CWDE BRUSHES See Tabulation POLES 4

VENTILATED No FRAME DIAMETER 5-1/8"

BEARINGS See tabulation.

LUBRICATION Soak absorbent bronze bearing and felt oiling pad with SAE 20 oil. Allow excess oil to drain out before assembling end head on motor.

Ball bearing is prelubricated and sealed and no additional lubrication is required.

BRUSH REPLACEMENT Replace brushes when they have worn to a length of 3/8" or less.

SPRING TENSION 42 to 53 ounces with new brushes. Measure with a spring scale hooked under the brush spring. Pull the scale on a line opposite the line of force exerted by the brush spring and take the reading just as the spring leaves the brush.

END PLAY Adjust to .005" minimum with thrust washers on the commutator end of the armature shaft. Refer to Parts & Equipment List for the thrust washer package.

TEST SPECIFICATIONS (77°F/25°C)

	Terminal Voltage	Maximum Amperes	RPM	Torque Ft. Lbs.
No Load Test	20	65	5000 Min.	0
Stall Torque Test	4	400	0	22.0

UNIT	BRUSHES	C.E. BEARING	D.E. BEARING	INTERNAL WIRING	SPECIAL NOTES
MFY-4001T	8	Absorbent Bronze	Ball Bearing	Figure 1	See Note
MFY-4101	4	Ball Bearing	Ball Bearing	Figure 2	
MFY-4102,S	4	Ball Bearing	Ball Bearing	Figure 2	
MFY-4201,S	4	Ball Bearing	Ball Bearing	Figure 2	
MFY-4202,S	4	Ball Bearing	Ball Bearing	Figure 2	

Note: After inspection of various parts, paint terminal studs and brush holder insulation with red glyptol. Cover glyptol and all metal surfaces except pilots, head seats, threads, commutator and bearing surfaces with air-drying fungus-resistant insulating varnish. Allow varnish to soak into field coils and armature windings. Drain and dry thoroughly before assembling motor.

prestolite
SERVICE
INFORMATION

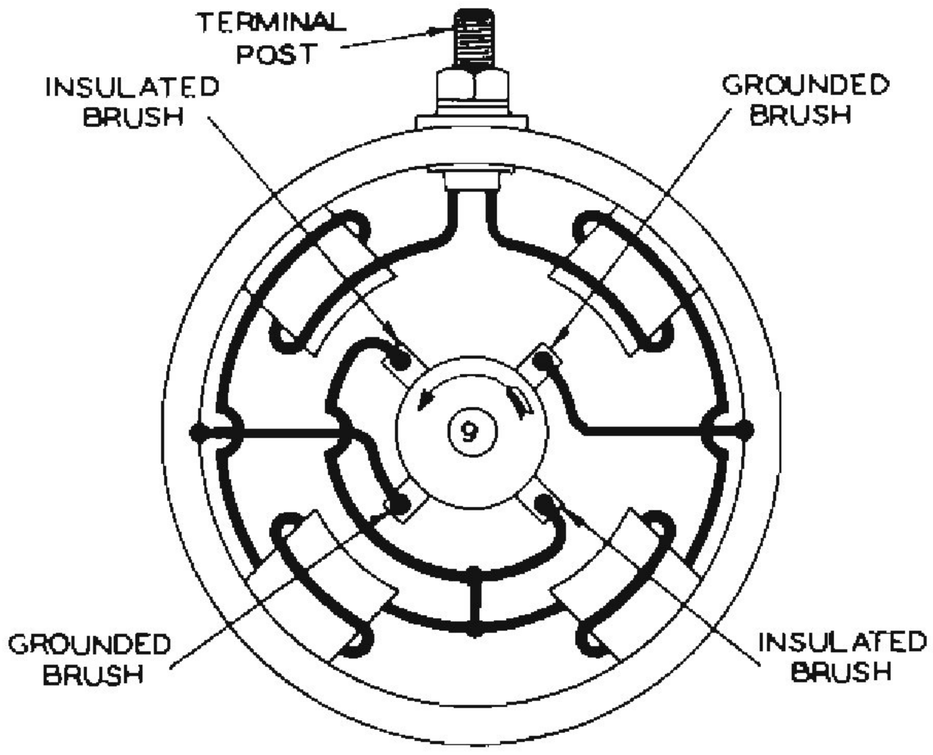

Figure 1
Internal Wiring

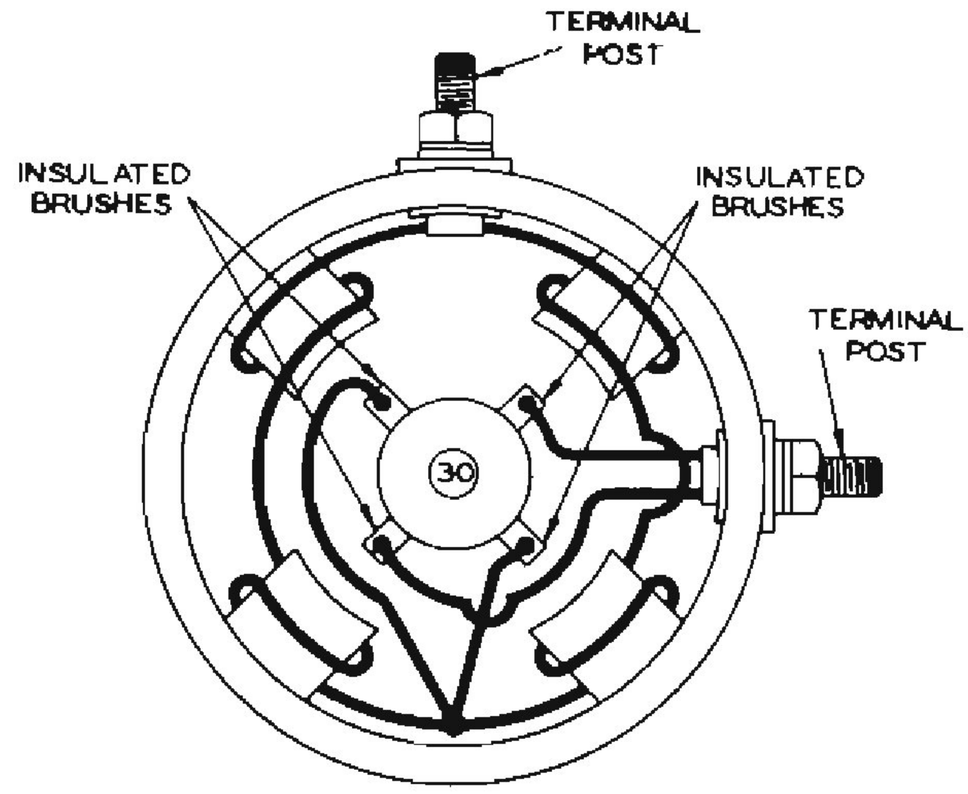

Figure 2
Internal Wiring