VOLTAGE 36/48 ROTATION See Tabulation BRUSHES 8 POLES 4

VENTILATED See Tabulation FRAME DIAMETER 7 1/8"

BEARINGS Ball bearings used at both ends.

LUBRICATION Both ball bearings are prelubricated and sealed. No additional lubrication required.

BRUSH REPLACEMENT Replace brushes when they have worn to a length of 9/16" or less.

SPRING TENSION 30 to 36 ounces with new brushes. Measure with a spring scale hooked under the brush spring at the brush. Pull the scale on a line opposite the line of force exerted by the brush spring and take the reading just as the spring leaves the brush.

END PLAY No adjustment required.

SHUNT FIELD DRAW 3.4 to 3.9 amperes at 36.0 volts

TEST SPECIFICATIONS ($77^{\circ}F$)

	Terminal Voltage	Maximum Amperes	RPM	Torque -Ft. Lbs.
No Load Test	36	25	3500 Min.	- 0 -
Light Load or Stall Torque Test	34.05	135	2645-3044	8.0

prestolite.

SERVICE

INFORMATION

Unit	Rotation	Ventilated	Internal Wiring
MGP-4001	CCWDE	No	Figure 1
MGP-4002	CWDE	Yes	Figure 2
MGP-4002A	CWDE	No	Figure 2
MGP-4003	CCWDE	NO	Figure 1
MGP-4004	CCWDE	Yes	Figure 1
MGP-4005	CCWDE	Yes	Figure 1
MGP-4006	CCWDE	Yes	Figure 1
MGP-4007	CCWDE	Yes	Figure 1
MGP-4008	CCWDE	No	Figure 1

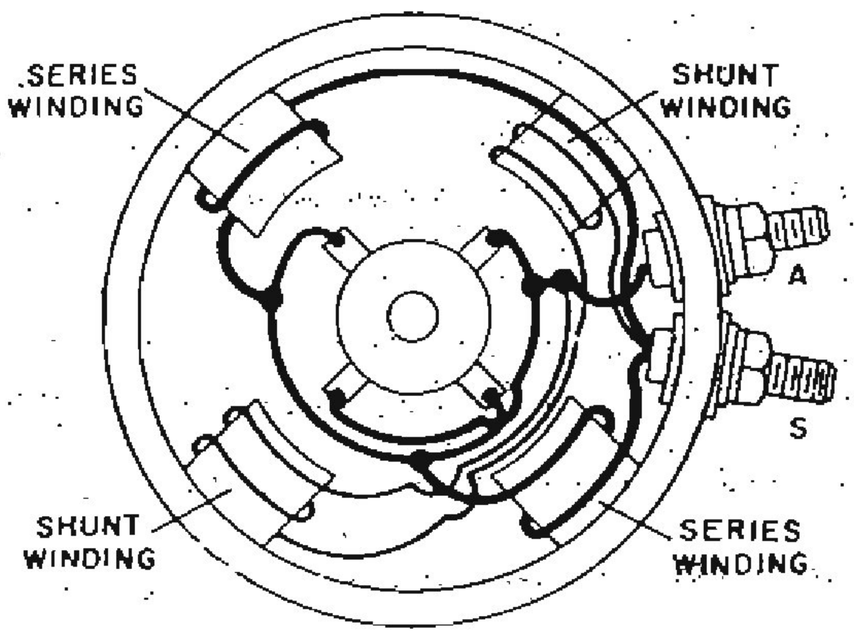

VIEWED FROM COMMUTATOR END

CCWDE

Figure 1

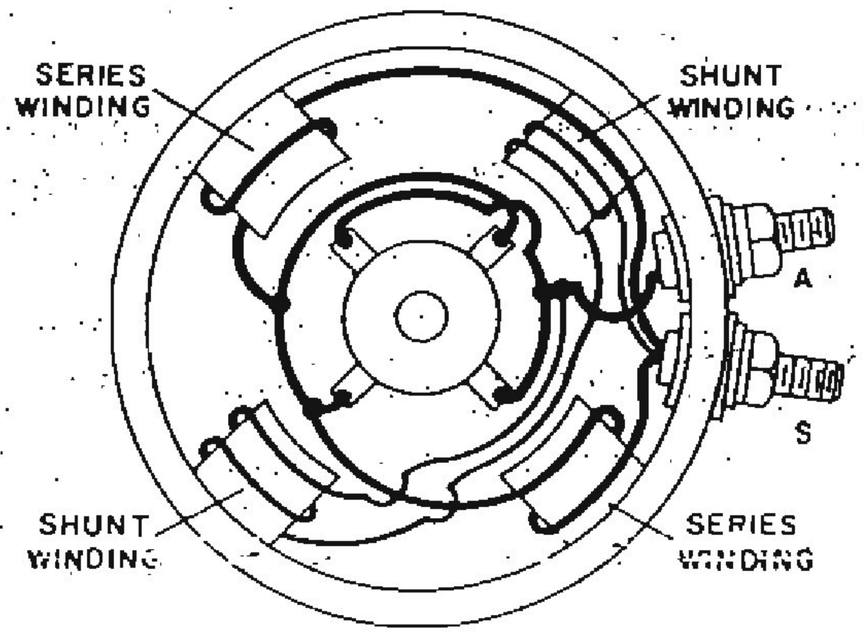

VIEWED FROM COMMUTATOR END

CWDE

Figure 2