prestolite SERVICE INFORMATION

MGR

Pump Motor

11/29/79

VOLTAGE 24 ROTATION See Tabulation BRUSHES 8 POLES 4

VENTILATED Yes FRAME DIAMETER 7 1/8"

LUBRICATION — None required. Prelubricated and sealed ball bearings used at both ends of motor.

BRUSH REPLACEMENT — Replace brushes when they have worn to a length of 9/16" or less.

SPRING TENSION — 30 to 36 ounces with new brushes. Measure with a spring scale hooked under the brush spring at the brush. Pull the scale on a line opposite the line of force exerted by the brush spring and take the reading just as the spring leaves the brush.

END PLAY — No adjustment required.

SHUNT FIELD DRAW — 3.75 to 3.38 amperes at 24.0 volts.

TEST SPECIFICATIONS — ($77^{o}F/25^{o}C$)

	Terminal Voltage	Maximum Amperes	RPM	Torque Ft. Lbs.
No Load Test	12.0	27	2740 Min.	- 0 -
Light Load Test	20.72	216	2690 to 2980	8.0

Unit	Rotation	Internal Wiring
MGR-4001	CCWDE	Figure 1
MGR-4002	CWDE	Figure 2

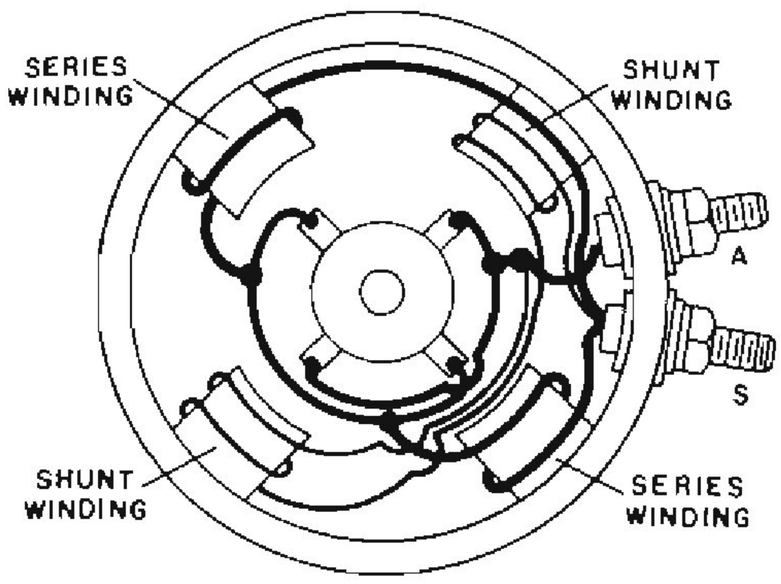

VIEWED FROM COMMUTATOR END

CCWDE

Figure #1

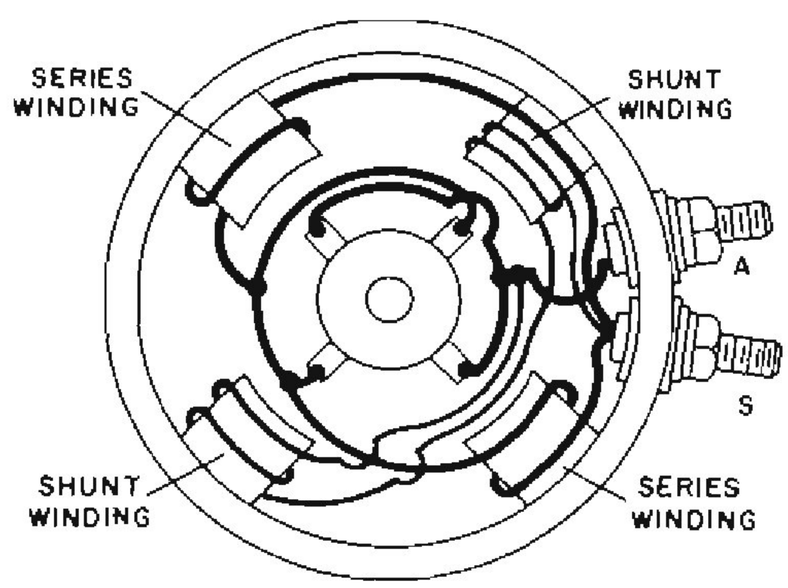

VIEWED FROM COMMUTATOR END

CWDE

Figure #2