VOLTAGE 36 ROTATION Reversible BRUSHES 8 POLES 4

VENTILATED Yes FRAME DIAMETER 7-1/8"

LUBRICATION None required. Prelubricated and sealed ball bearings used at both ends of motor.

FIELD RESISTANCE (77°F) .0020 to .0033 ohms. Measure between terminals S-1 and S-2.

ARMATURE TEST These armatures have standard winding connections and can be tested on a growler using a metal strip or hacksaw blade to locate shorted windings.

COMMUTATOR Minimum diameter 2.938". Replace armature when commutator has worn to this dimension.

BRUSH REPLACEMENT Replace brushes when they have worn to a length of 9/16" or less.

SPRING TENSION 30 to 36 ounces with new brushes. Measure with a spring scale hooked under the brush spring at the brush. Pull the scale on a line opposite the line of force exerted by the brush spring and take the reading just as the spring leaves the brush.

TEST CONNECTIONS

CWDE
Connect S-2 to battery positive
Connect A-2 and S-1
Connect A-1 to battery negative

CCWDE
Connect S-1 to battery positive
Connect A-2 and S-2
Connect A-1 to battery negative

TEST SPECIFICATIONS @ (77°F/25°C)

	Motor Terminal Voltage	Maximum Amperes	RPM	Torque Ft. Lbs.
No Load Test	12	28	3130 Min.	0
Light Load Test	33.90	150	2730 to 3200	10

prestolite.
SERVICE
INFORMATION

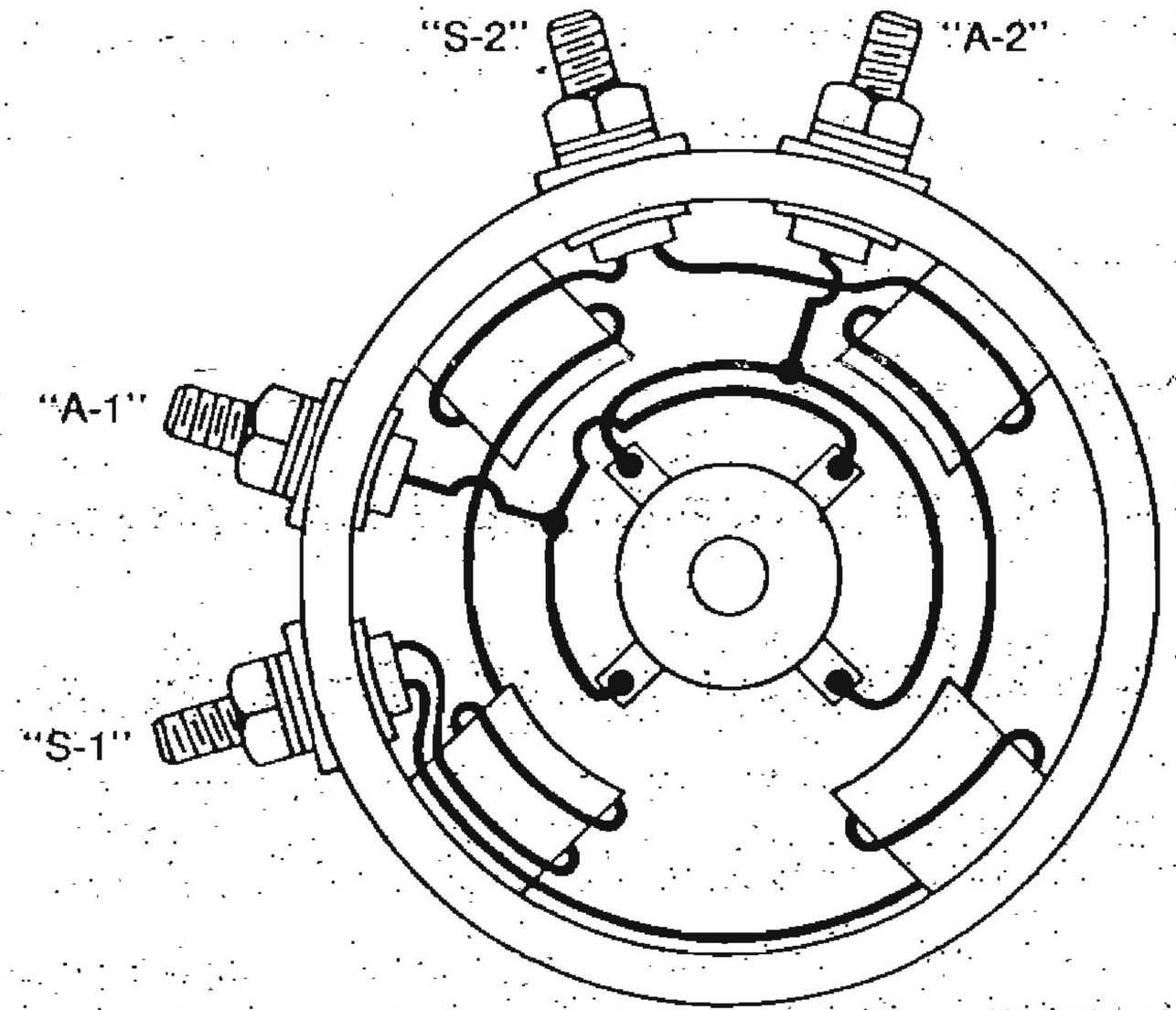

INTERNAL WIRING
VIEWED FROM COMMUTATOR END

VOLTAGE See Tabulation ROTATION See Tabulation 8RUSHES 8 POLES 4

VENTILATED Yes FRAME DIAMETER 7-1/8"

LUBRICATION None required. Prelubricated and sealed ball bearings used at both ends of motor.

FIELD RESISTANCE (77°F/25°C) .0029 to .0033 ohms. Measured between terminal "S" and field armature strap.

ARMATURE TEST These armatures have standard winding connections and can be tested on a growler using a metal strip or hacksaw blade to locate shorted windings.

COMMUTATOR Minimum diameter 2.938". Replace armature when commutator has worn to this dimension.

8RUSH REPLACEMENT Replace brushes when they have worn to a length of 9/16" or less.

SPRING TENSION 30 to 36 ounces with new brushes. Measure with a spring scale hooked under the brush spring at the brush. Pull the scale on a line opposite the line of force exerted by the brush spring and take the reading just as the spring leaves the brush.

TEST SPECIFICATIONS @ (77°F/25°C)

	Motor Terminal Voltage	Maximum Amperes	RPM	Torque Ft. Lbs.
No Load Test	12	28	3130 Min.	0
Light Load Test	33.90	150	2730-3200	10

UNIT	ROTATION	VOLTAGE	INTERNAL WIRING
MGT-4001,A	CWDE	36	Figure 1
MGT-4003	CWDE	36	Figure 1
MGT-4004,A	CWDE	36	Figure 1
MGT-4005	CCWDE	36/48	Figure 2
MGT-4008	CCWDE	36/48	Figure 2
MGT-4008A,B	CCWDE	36/48	Figure 2
MGT-4009	CWDE	36	Figure 1
MGT-4010	CWDE	36	Figure 1

prestolite

SERVICE
INFORMATION

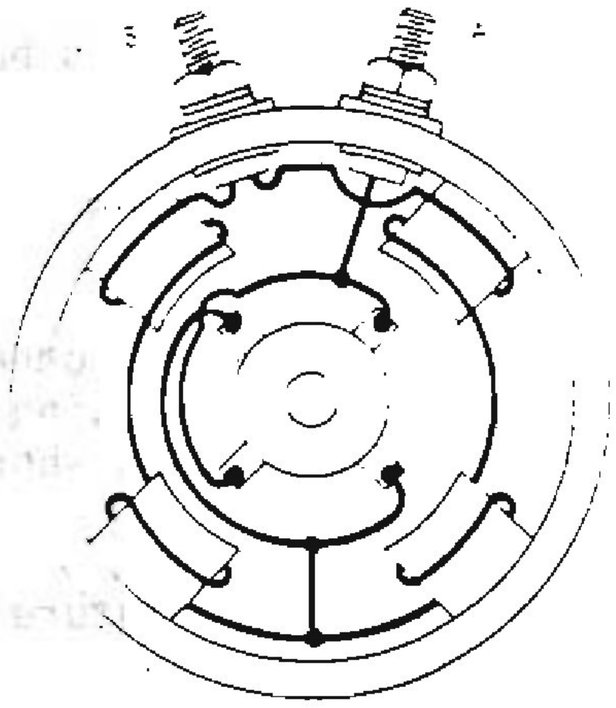

VIEWED FROM COMMUTATOR END

FIG. 1

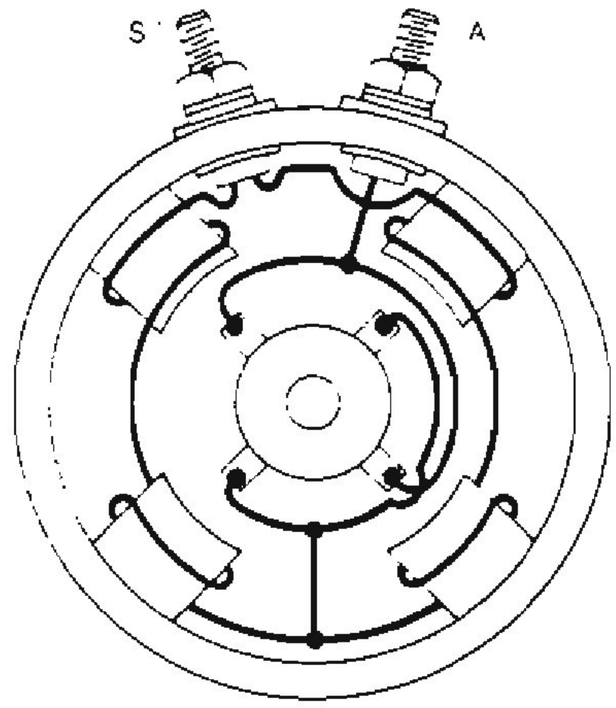

VIEWED FROM COMMUTATOR END

FIG. 2