VOLTAGE See Tabulation ROTATION CWDE BRUSHES 4 POLES 4

VENTILATED See Tabulation FRAME DIAMETER 6-5/8"

BEARINGS — Ball bearings used at both ends of motor.

LUBRICATION — Sealed bearings are prelubricated and require no additional lubrication.

Lubricate other bearings with approximately 20 grams of Chevron BRB-2 grease every 1500 hours or 6 months.

ARMATURE TEST — These armatures have equalizer connections on the commutator and cannot be tested on a growler for shorted windings. Test to light load specifications.

COMMUTATOR — Minimum diameter 2.875". Replace armature when commutator has worn to this dimension.

BRUSH REPLACEMENT — Replace brushes when they have been worn to a length of 9/16" or less.

SPRING TENSION — 30 to 36 ounces with new brushes. Measure with a spring scale hooked under the brush spring at the brush. Pull the scale on a line opposite the line of force exerted by the brush spring and take the reading just as the spring leaves the brush.

TEST SPECIFICATION — ($77^{O}F/25^{O}C$)

	Terminal Voltage	Maximum Amperes	RPM	Torque Ft. Lbs.
No Load Test	12	15	1630 Min.	- 0 -
Light Load Test	38	66	1590 - 1770	8.0

Unit	Voltage	Ventilated	Internal Wiring
MJB-4001	48	Yes	Figure 1
MJB-4001A	38	Yes	Figure 1
MJB-4002,A	48	Yes	Figure 1
MJB-4002B	48	Yes	Figure 2
MJB-4002C	48	No	Figure 2
MJB-4003,A	38	No	Figure 3
MJB-4004,A	38	No	Figure 4
MJB-4005	38	No	Figure 4

...ted in U.S.A.

prestolite.
SERVICE
INFORMATION

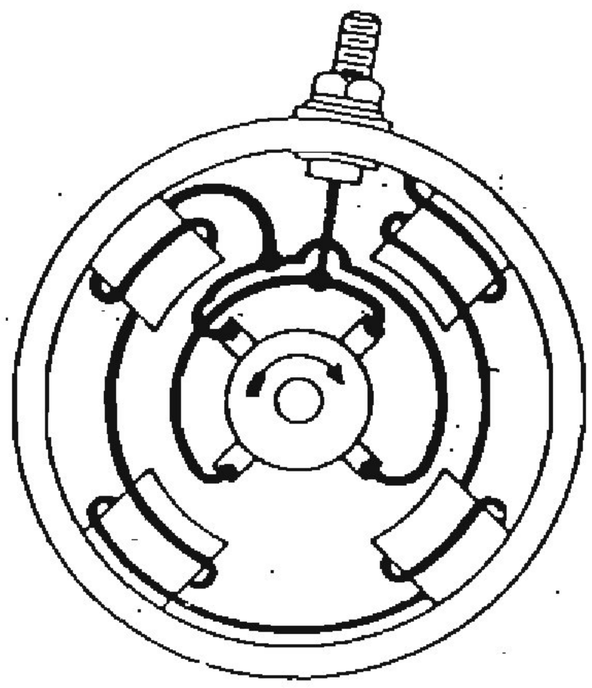

VIEWED FROM COMMUTATOR END

Figure 1

Internal Wiring
Viewed From Comm End

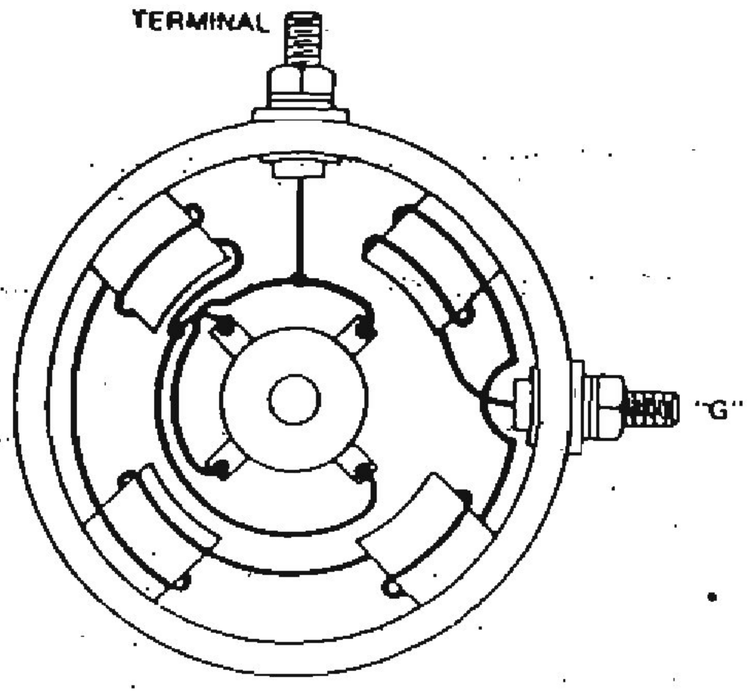

VIEWED FROM COMMUTATOR END

Figure 2

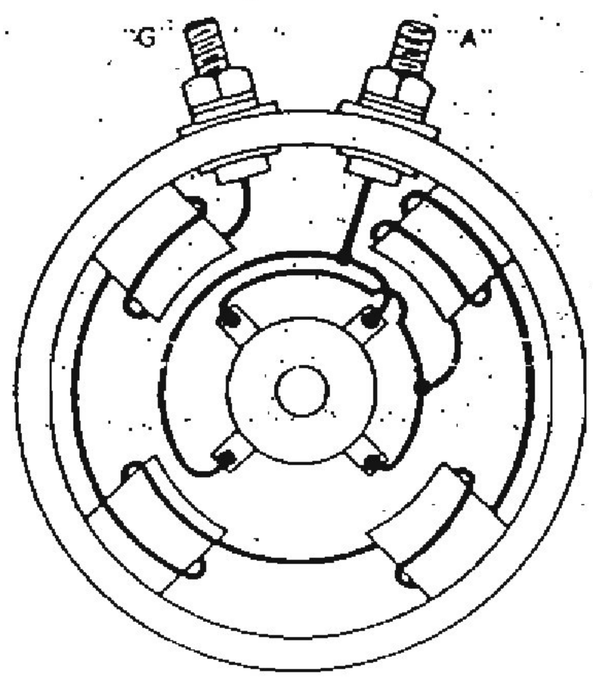

VIEWED FROM DRIVE END

Figure 3

Internal Wiring
Viewed From Drive End

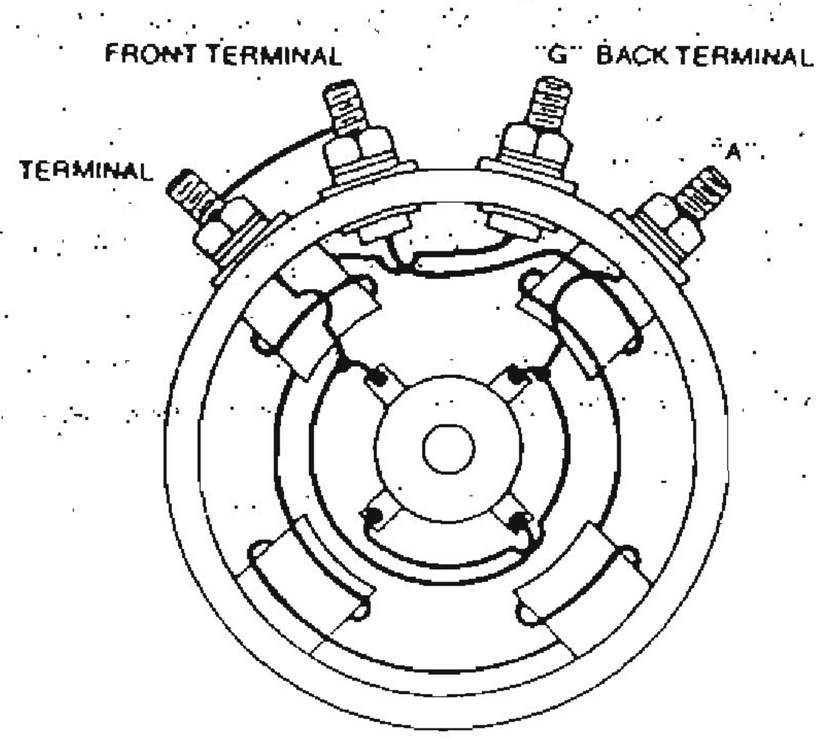

VIEWED FROM COMMUTATOR END

Figure 4