VOLTAGE 24 ROTATION Reversible BRUSHES 4 POLES 4

VENTILATED No FRAME DIAMETER 6-5/8"

LUBRICATION — None required. Prelubricated and sealed ball bearings used at both ends of motor.

FIELD RESISTANCE (77°F) — .081 to .093 ohms measured between terminals S-1 and S-2.

ARMATURE TEST — These armatures have standard winding connections and can be tested on a growler for shorted windings.

COMMUTATOR — Minimum diameter 2.875". Replace armature when commutator has worn to this dimension.

BRUSH REPLACEMENT — Replace brushes when they have worn to a length of 9/16" or less.

SPRING TENSION — 30 to 36 ounces with new brushes. Measure with a spring scale hooked under the brush spring at the brush. Pull the scale on a line opposite the line of force exerted by the brush spring and take the reading just as the spring leaves the brush.

TEST CONNECTIONS

CWDE

Connect S-1 to battery positive
Connect S-2 to A-1
Connect A-2 to battery negative

CCWDE

Connect S-1 to battery positive
Connect S-2 to A-2
Connect A-1 to battery negative

TEST SPECIFICATIONS (77°F)

	Terminal Voltage	Maximum Amperes	RPM	Torque Ft. Lbs.
No Load Test	12	20	2300 Min.	0
Light Load Test	24.5	40	2330/2590	2.0

UNIT

MJZ-4001
MJZ-4002

prestolite
SERVICE
INFORMATION

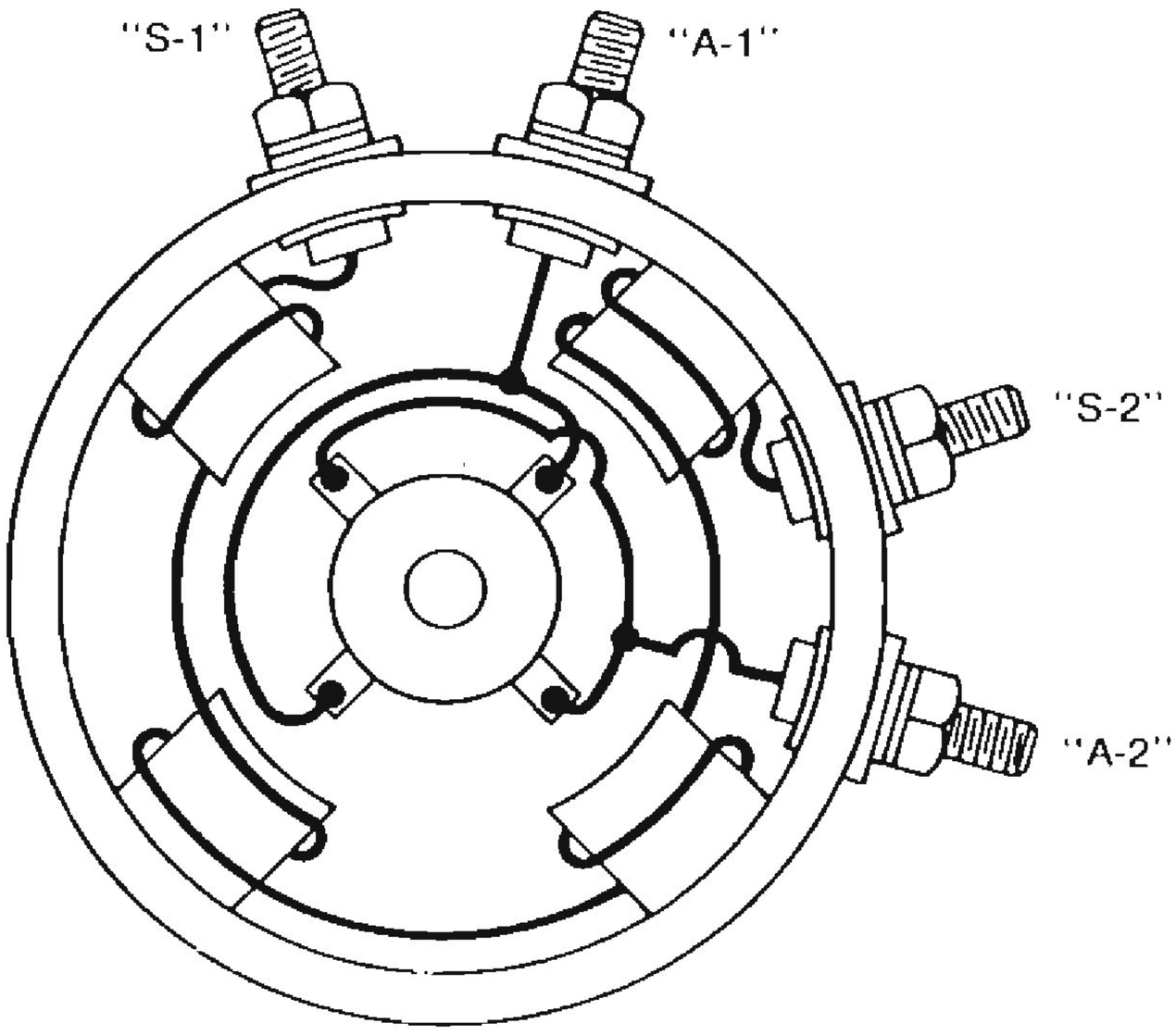

INTERNAL WIRING

VIEWED FROM COMMUTATOR END