VOLTAGE 24/36 ROTATION Reversible BRUSHES 8 POLES 4

VENTILATED Yes FRAME DIAMETER 6-5/8"

LUBRICATION — None required. Prelubricated and sealed ball bearings used at both ends of motor.

FIELD RESISTANCE (77°F/25°C) — .076 to .084 ohms measured between terminals S-1 and S-2.

ARMATURE TEST — These armatures have standard winding connections and can be tested on a growler using a metal strip or hacksaw blade to locate shorted windings.

COMMUTATOR — Minimum diameter 2.750". Replace armature when commutator has worn to this dimension.

BRUSH REPLACEMENT — Replace brushes when they have worn to a length of 9/16" or less.

SPRING TENSION — 30 to 36 ounces with new brushes. Measure with a spring scale hooked under the brush spring at the brush. Pull the scale on a line opposite the line of force exerted by the brush spring and take the reading just as the brush spring leaves the brush.

TEST CONNECTIONS

24 VOLT

CWDE	CCWDE
Connect S-3 and S-1 to battery positive	Connect S-3 and S-1 to battery positive
Connect S-4 and S-2 to A-1	Connect S-4 and S-2 to A-2
Connect A-2 to battery negative	Connect A-1 to battery negative

36 VOLT

Connect S-3 to battery positive	Connect S-3 to battery positive
Connect S-4 to S-1	Connect S-4 to S-1
Connect S-2 to A-1	Connect S-2 to A-2
Connect A-2 to battery negative	Connect A-1 to battery negative

prestolite.

SERVICE INFORMATION

TEST SPECIFICATIONS (77°F/25°C) Test with 24 volt connections in both directions of rotation.

	Terminal Voltage	Maximum Amperes	RPM	Torque Ft. Lbs.
No Load Test	12	38	3600 Min.	- 0 -
Light Load Test	24	125	2750	5.5

Unit

MKP-4001

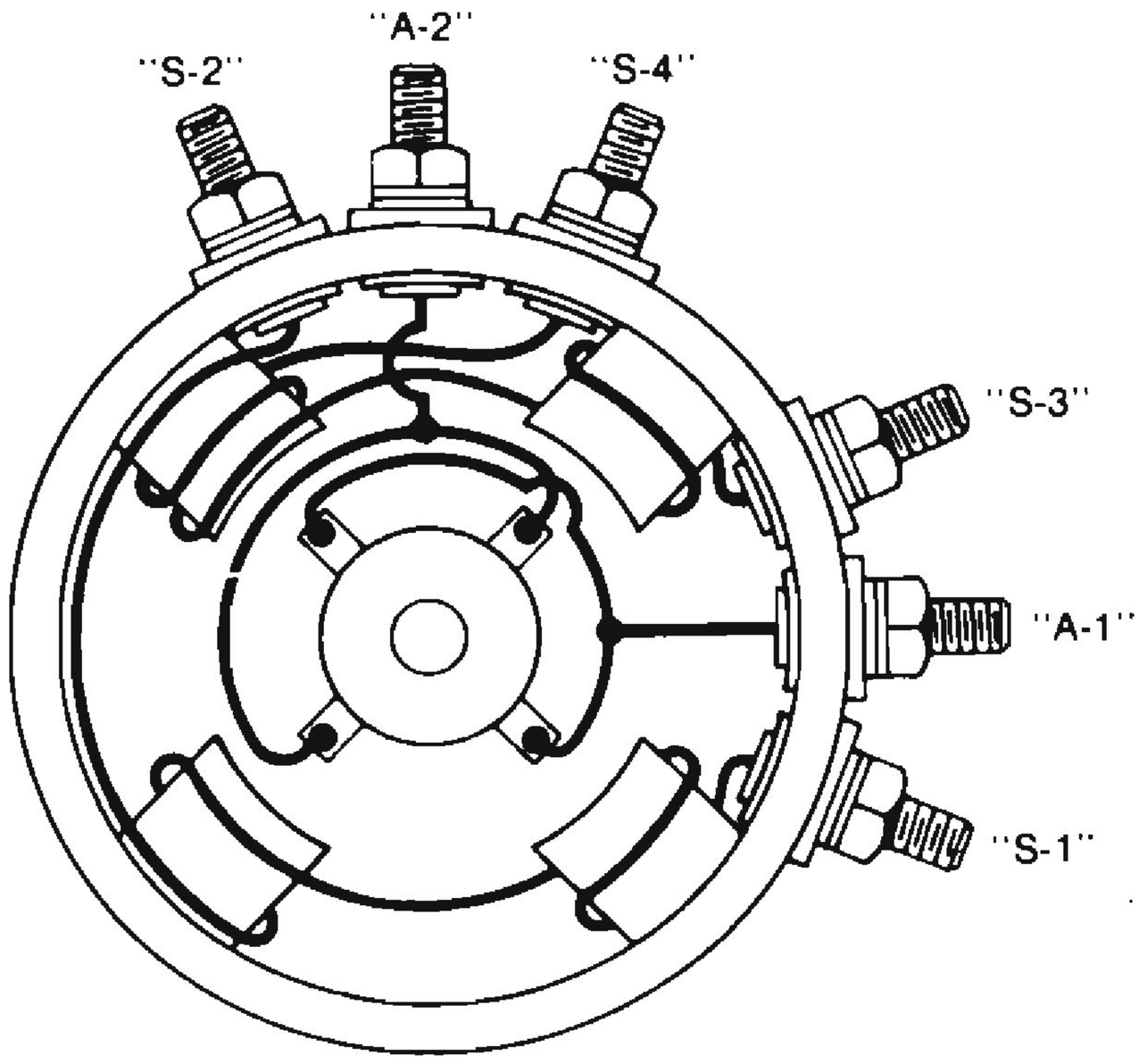

VIEWED FROM COMMUTATOR END