VOLTAGE 12 ROTATION Reversible BRUSHES 4 POLES 4

VENTILATED SEE TABULATION FRAME DIAMETER 6-5/8"

LUBRICATION — None required. Prelubricated and sealed ball bearings used at both ends of motor.

FIELD RESISTANCE (77°) — .0031 to .0036 ohms measured between terminals S-1 and S-2 or S-3 and S-4.

ARMATURE TEST — These armatures have standard winding connections and can be tested on a growler for shorted windings.

COMMUTATOR — Minimum diameter 2.875". Replace armature when commutator has worn to this dimension.

BRUSH REPLACEMENT — Replace brushes when they have worn to a length of 9/16" or less.

SPRING TENSION — 30 to 36 ounces with new brushes. Measure with a spring scale hooked under the brush spring at the brush. Pull the scale on a line opposite the line of force exerted by the brush spring and take the reading just as the spring leaves the brush.

TEST CONNECTIONS (77°F)

TEST #1

CWDE	CCWDE
Connect S-1 to battery positive	Connect S-1 to battery positive
Connect S-2 to A-1	Connect S-2 to A-2
Connect A-2 to battery negative	Connect A-1 to battery negative

TEST #2

CWDE	CCWDE
Connect A-1 to battery positive	Connect A-1 to battery positive
Connect A-2 to S-2	Connect A-2 to S-1
Connect S-1 to battery negative	Connect S-2 to battery negative

prestolite.
SERVICE
INFORMATION

TEST #3

HIGH SPEED

CWDE	CCWDE
Connect S-1 to battery positive	Connect S-1 to battery positive
Connect S-2 to A-1	Connect S-2 to A-2
Connect A-2 to battery negative	Connect A-1 to battery negative

LOW SPEED

CWDE	CCWDE
Connect A-2 to battery positive	Connect A-1 to battery positive
Connect A-1 to S-3	Connect A-2 to S-3
Connect S-2 to S-4	Connect S-2 to S-4
Connect S-1 to battery negative	Connect S-1 to battery negative

TEST SPECIFICATIONS (77°F) USE LOW SPEED CONNECTIONS FOR TWO SPEED MOTORS DURING NO LOAD TEST. USE HIGH SPEED CONNECTIONS FOR LIGHT LOAD TEST.

	Terminal Voltage	Maximum Amperes	RPM	Torque Ft. Lbs.
No Load Test	12	28	3800 Min.	- 0 -
Light Load Test	11.28	100	2400-2680	2

UNIT	VENTILATED	TEST CONNECTIONS	INTERNAL WIRING
MKS-4001	YES	#3	Figure 1
MKS-4002	NO	#1	Figure 2
MKS-4003	NO	#1	Figure 2
MKS-4004	NO	#2	Figure 3
MKS-4005	YES	#3	Figure 1

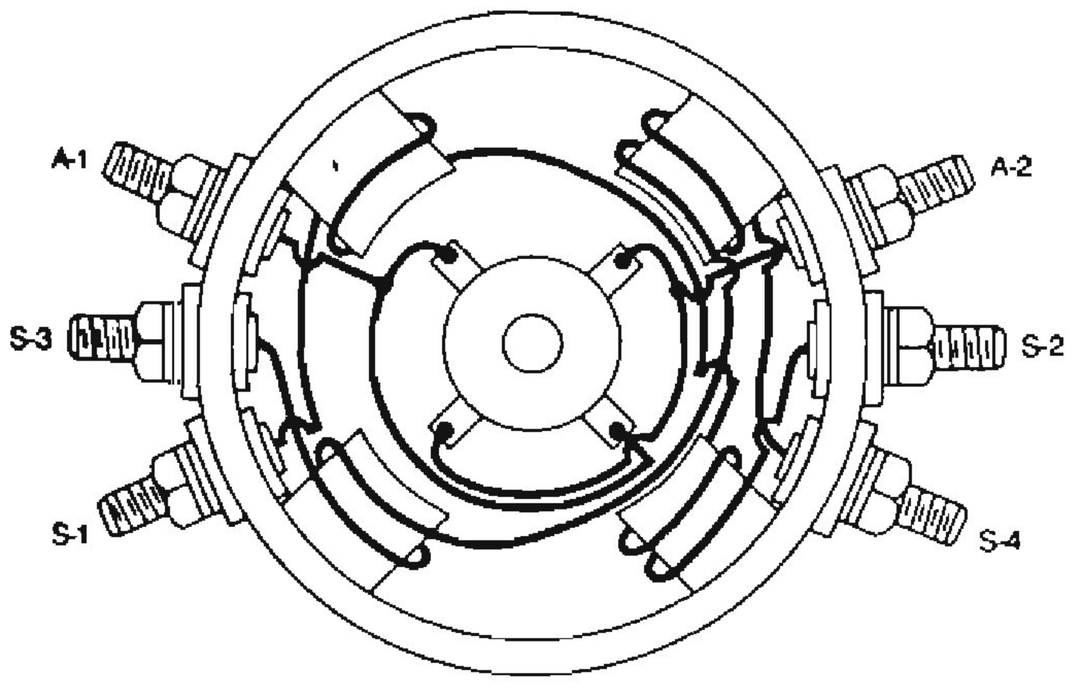

VIEWED FROM COMMUTATOR END

FIG. 1

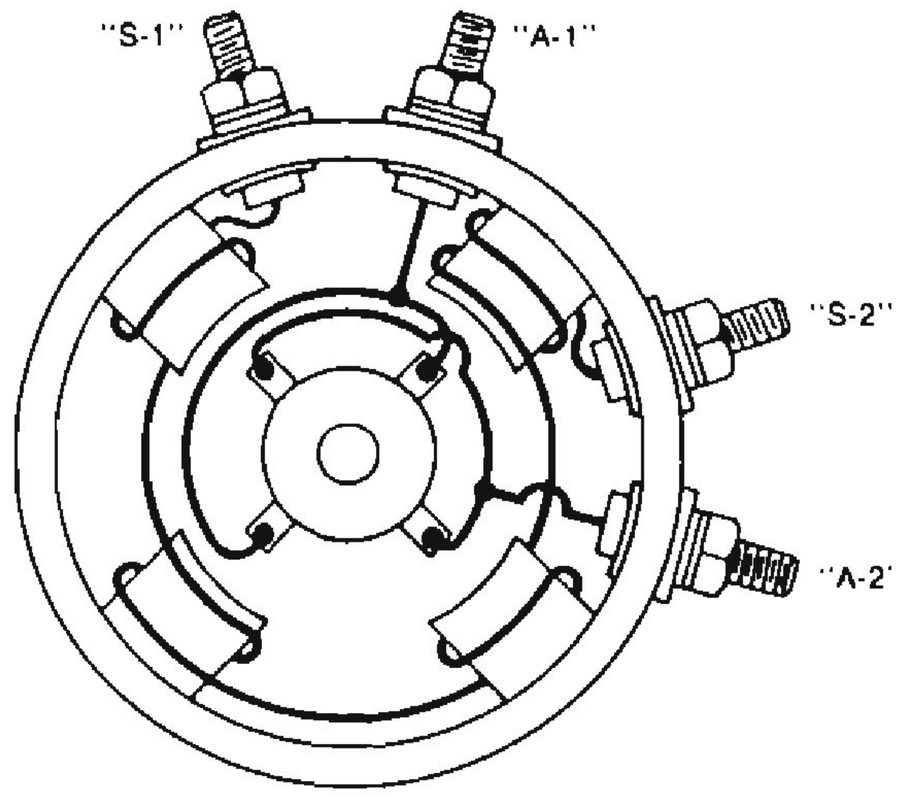

VIEWED FROM COMMUTATOR END

FIG. 2

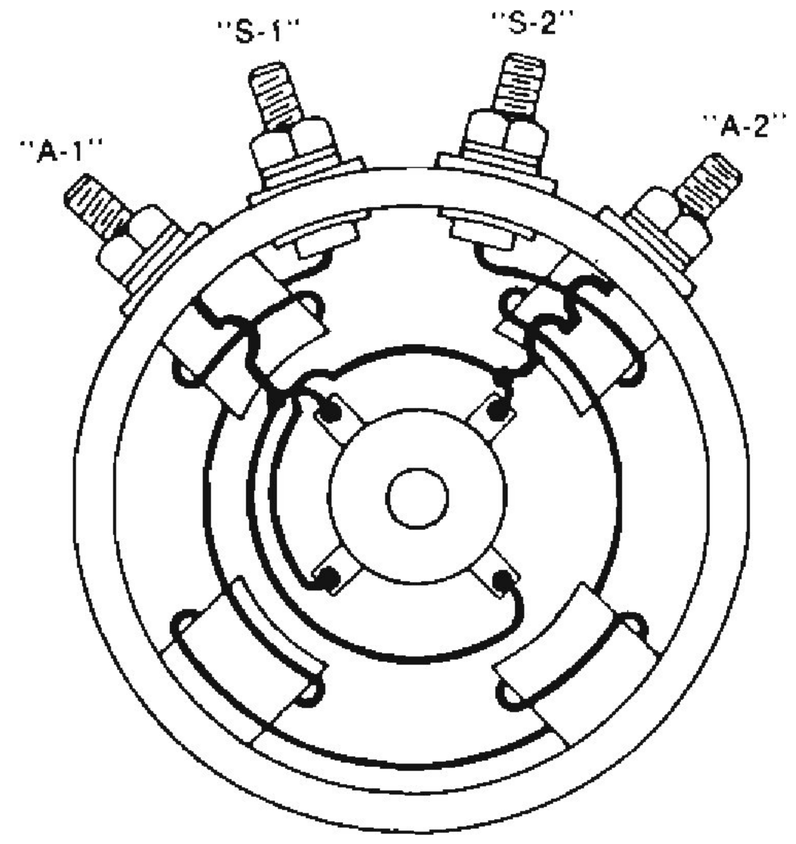

VIEWED FROM COMMUTATOR END

FIG. 3