VOLTAGE See Tabulation ROTATION Reversible BRUSHES See Tabulation

POLES 4 VENTILATED See Tabulation DIAMETER 7-1/8"

LUBRICATION — None required. Sealed ball bearings used at both ends of motor.

FIELD RESISTANCE (77°F) — .0046 to .0057 ohms measured between terminals S-1 and S-2.

ARMATURE TEST — These armatures have standard winding connections and can be tested on a growler for shorted windings.

COMMUTATOR — Minimum diameter 2.750". Replace armature when commutator has worn to this dimension.

BRUSH REPLACEMENT — Replace brushes when they have worn to a length of 9/16" or less.

SPRING TENSION — 30 to 36 ounces with new brushes. Measure with a spring scale hooked under the brush spring at the brush. Pull the scale on a line opposite the line of force exerted by the brush spring and take the reading just as the spring leaves the brush.

TEST CONNECTIONS

CWDE	CCWDE
Connect S-1 to battery positive	Connect S-1 to battery positive
Connect S-2 to A-1	Connect S-2 to A-2
Connect A-2 to battery negative	Connect A-1 to battery negative

TEST SPECIFICATIONS (77°F/25°C) Test in both directions of rotation.

	Terminal Voltage	Maximum Amperes	RPM	Torque Ft. Lbs.
No Load Test	12	32	2765 Min.	0
Light Load Test	34.7	98	3150-3500	5

* Note: Test MKU-4005 and MKU-4006 to No Load Test only.

UNIT	VOLTAGE	VENTILATED	BRUSHES	INTERNAL WIRING
MKU-4001	36/48	No	8	Fig. 1
MKU-4002	36/48	No	8	Fig. 1
MKU-4003	36	Yes	8	Fig. 2

Printed in U.S.A.

prestolite

SERVICE INFORMATION

UNIT	VOLTAGE	VENTILATED	BRUSHES	INTERNAL WIRING
MKU-4004	36/48	No	8	Fig. 2
MKU-4005	24	Yes	8	Fig. 2
MKU-4006	24	Yes	4	Fig. 2

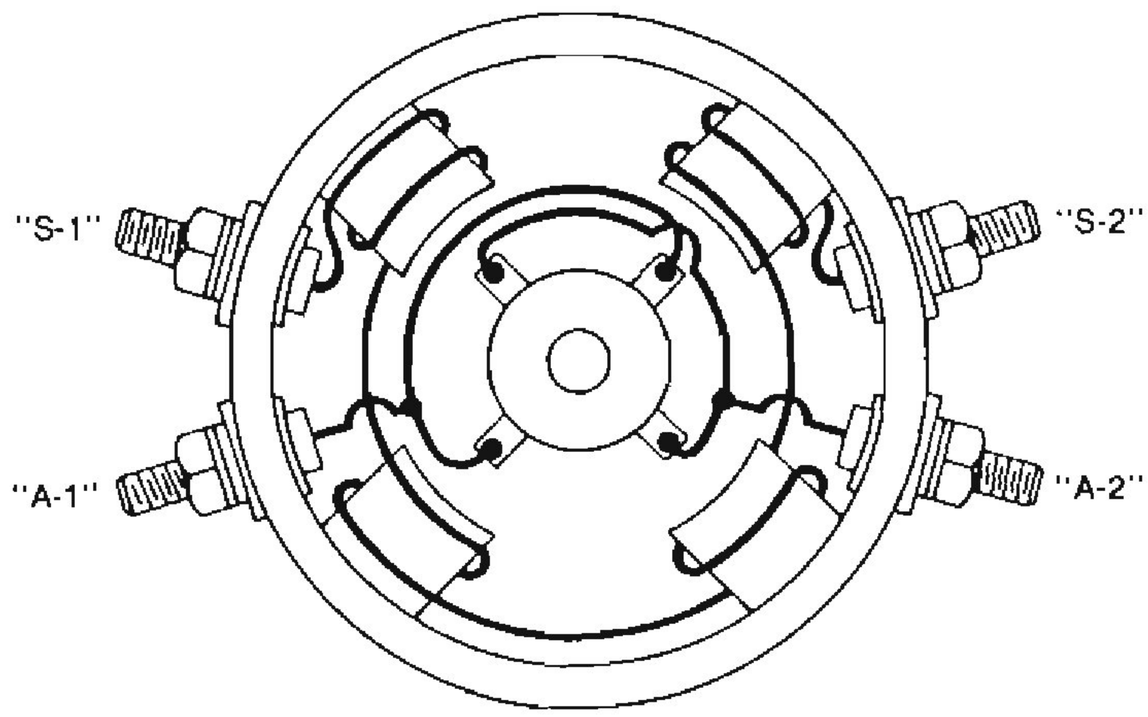

VIEWED FROM COMMUTATOR END

FIG. 1

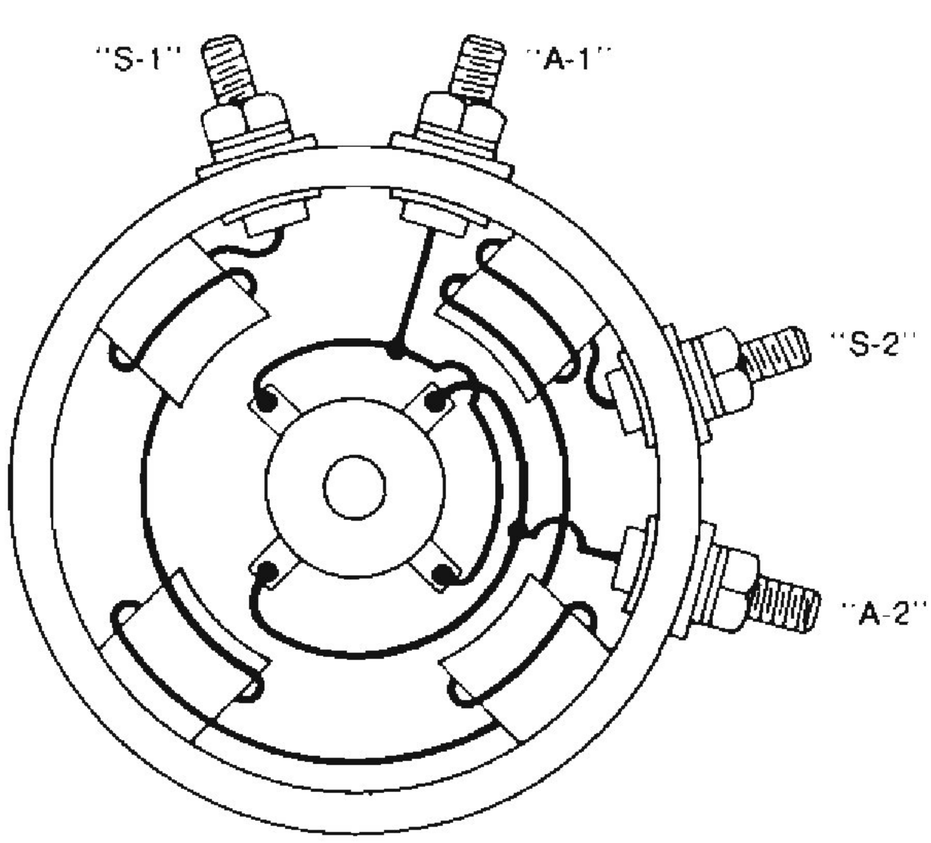

VIEWED FROM COMMUTATOR END

FIG. 2