VOLTS See Tabulation ROTATION See Tabulation BRUSHES 4 POLES 4

LUBRICATION

At overhaul, all bronze bearings should be well lubricated with medium engine oil.

Cover armature shaft at drive end with a film of lubricant before assembling drive.

BRUSH REPLACEMENT

Replace brushes when they have worn to a length of 1/4" or less.

BRUSH SPRING TENSION

ML-4000 Series: 28 to 40 ounces with new brushes. Measure with scale hooked in the small loop in the end of the brush spring. Pull on a line perpendicular to the line of force exerted by the brush spring and take the reading just as the spring leaves the brush.

ML-4100 & 4200 Series: 38 to 49 ounces with new brushes. Measure with scale hooked under the brush screw tight against the brush. Pull the spring scale on a line parallel to the face of the brush and take the reading just as the brush leaves the commutator.

ML-4300 Series: 42 to 53 ounces with new brushes. Measure with the scale hooked under the brush spring near the end. Pull on a line perpendicular to the line of force exerted by the brush spring and take the reading just as the spring leaves the brush.

TRANSMISSION

Bendix drive

END PLAY

Adjust to .005" minimum. Refer to Parts & Equipment List for thrust washer package.

COMMUTATOR END BEARING

The commutator end bearing must be flush with the bearing sleeve on the inner end. On ML-4300 Series, be sure felt oiling pad is in the outer end of the bearing.

TEST SPECIFICATIONS — 6 Volt Motors

No Load Draw	5.0 volts,	65 maximum amperes,	2250 minimum RPM.
Stall Torque	2.0 volts,	370 maximum amperes,	10.3 minimum Ft. Lbs.

TEST SPECIFICATIONS — 12 Volt Motors

No Load Draw	10.0 volts,	80 maximum amperes,	3900 minimum RPM.
Stall Torque	4.0 volts,	750 maximum amperes,	26.0 minimum Ft. Lbs.

prestolite.

SERVICE

INFORMATION

Unit	Volts	Rotation	Pinion Position*	Special Instructions
ML-4176A	6	CW	1 21/32" - 1 27/32"	Notes 1, 2, 4A
ML-4181	6	CCW	1 21/32" - 1 27/32"	Notes 1, 2, 4A
ML-4192	6	CW	1 21/32" - 1 27/32"	Notes 1, 2, 4A
ML-4218	12	CW	1 21/32" - 1 27/32"	Notes 1, 2, 4A
ML-4301	12	CW	1 21/32" - 1 27/32"	Notes 1, 2, 4A
ML-4303	6	CW	1 21/32" - 1 27/32"	Notes 1, 2, 4A
ML-4305	6	CW	1 21/32" - 1 27/32"	Notes 1, 2, 4A
ML-4307	12	CW	1 21/32" - 1 27/32"	Notes 1, 2, 4A
ML-4308	12	CW	1 21/32" - 1 27/32"	Notes 2, 3, 4A
ML-4309	6	CW	1 21/32" - 1 27/32"	Notes 1, 2, 4A
ML-4310	6	CW	1 21/32" - 1 27/32"	Notes 1, 2, 4A
ML-4310A	6	CW	1 21/32" - 1 27/32"	Notes 1, 2, 4A
ML-4312	6	CW	1 21/32" - 1 27/32"	Notes 1, 2, 4A
ML-4314	12	CW	1 21/32" - 1 27/32"	Notes 2, 3, 4A
ML-4316,A	12	CW	1 31/64" - 1 51/64"	Notes 2, 3, 4B
ML-4318	6	CW	1 21/32" - 1 27/32"	Notes 1, 2, 4A
ML-4319	12	CW	1 29/64" - 1 51/64"	Notes 1, 2, 4C
ML-4320M	12	CW	1 29/64" - 1 51/64"	Notes 1, 2, 4C, 5
ML-4322	12	CW	1 1/2" - 1 51/64"	Notes 1, 2, 4D
ML-4324	6	CW	1 21/32" - 1 27/32"	Notes 1, 2, 4A
ML-4325	6	CCW	1 21/32" - 1 27/32"	Notes 1, 2, 4A
ML-4326	12	CW	1 23/32" - 1 27/32"	Notes 1, 2, 4E
ML-4327	12	CW	1 29/64" - 1 51/64"	Notes 1, 2, 4C
ML-4329	6	CW	2 1/4" - 2 3/8"	Notes 2, 3, 4F, 6
ML-4329T	6	CW	2 1/4" - 2 3/8"	Notes 2, 3, 4F, 6, 7
ML-4330	6	CW	1 21/32" - 1 27/32"	Notes 1, 2, 4A
ML-4331	6	CW	15/32" - 19/32"	Notes 1, 2, 4G
ML-4332	6	CW	1 29/64" - 1 51/64"	Notes 1, 2, 4C
ML-4334	6	CW	1 21/32" - 1 27/32"	Notes 1, 2, 4A
ML-4338	12	CCW	1 23/32" - 1 27/32"	Notes 1, 2, 4E
ML-4343	12	CCW	1 31/64" - 1 51/64"	Notes 2, 3, 4B
ML-4345	6	CW	1 21/32" - 1 27/32"	Notes 1, 2, 4A
ML-4346	6	CCW	1 21/32" - 1 27/32"	Notes 1, 2, 4A
ML-4348	12	CW	1 23/32" - 1 27/32"	Notes 1, 2, 4E
ML-4350	12	CW	1 21/32" - 1 27/32"	Notes 1, 2, 4A
ML-4351	12	CW	1 23/32" - 1 27/32"	Notes 1, 2, 4E
ML-4352,A	12	CW	1 31/64" - 1 51/64"	Notes 2, 3, 4B
ML-4353	12	CW	1 21/32" - 1 27/32"	Notes 1, 2, 4A
ML-4354	12	CW	1 23/32" - 1 27/32"	Notes 1, 2, 4E
ML-4356	12	CW	1 21/32" - 1 27/32"	Notes 1, 2, 4A
ML-4358,A	12	CW	57/64" - 1"	Notes 1, 2, 4H
ML-4362	12	CW	1 23/32" - 1 27/32"	Notes 1, 2, 4E
ML-4363	12	CW	1 23/32" - 1 27/32"	Notes 1, 2, 4E
ML-4366	12	CCW	57/64" - 1"	Notes 1, 2, 4H
ML-4367	12	CW	57/64" - 1"	Notes 2, 3, 4H
ML-4372	12	CW	1 23/32" - 1 27/32"	Notes 1, 2, 4E
ML-4376	12	CW	1 5/32" - 1 17/64"	Notes 1, 2, 4I
ML-4377	12	CW	7/8" - 1 1/32"	Notes 1, 2, 4J

* Unless otherwise noted, this dimension is measured from the face of the mounting flange to the outside edge of the pinion while in the retracted position. Check with the armature thrust toward the commutator end and again with the armature thrust toward the drive end. Adjust by installing thrust washers just inside the commutator end head or intermediate bearing plate as required. Refer to Parts & Equipment List for thrust washer package. If folo-thru type drives become extended while being worked on, adjust in the extended position as noted in Special Instructions.

NOTE 1 - The intermediate bearing must be flush wiht the bearing bore on the side toward the armature.

NOTE 2 - The pinion housing bearing must be flush with the bearing bore on the inside of the housing.

NOTE 3 - The intermediate bearing must be flush with the bearing bore on the side toward the Bendix drive.

NOTE 4 - With the drive extended, the pinion should be as indicated below when measured from the face of the mounting flange to the outside edge of the pinion (unless otherwise noted). Adjust in the same manner as in the retracted position, keeping both positions within limits.

A - 2 13/32" - 2 19/32"	F - 2 31/32" - 3 3/32"
B - 2 27/64" - 2 47/64"	G - 1 3/16" - 1 5/16"
C - 2 25/64" - 2 47/64"	H - 1 41/64" - 1 3/4"
D - 2 7/16" - 2 47/64"	I - 1 5/8" - 1 23/32"
E - 2 15/32" - 2 19/32"	J - 1 41/64" - 1 3/4"

NOTE 5 - After installation of new field coils, paint the inside of the frame and soak the field coils with air-drying, insulating varnish. Keep varnish off of brush leads, pilot seats, and threads. When reusing the original armature, its core and windings should be given the same treatment, being careful to keep bearing surfaces and commutator clean.

NOTE 6 - The pinion position is measured from the centerline of the positioning hole nearest the pinion to the outside edge of the pinion.

NOTE 7 - After inspection of various parts, paint terminal studs and brush holder insulation with red glyptol. Cover glyptol and all metal surfaces except pilots, head seats, threads, commutator and bearing surfaces with an air-drying, fungus-resistant insulating varnish. Allow varnish to soak into field coils and armature windings. Drain and dry thoroughly before assembling the motor.

prestolite.
SERVICE
INFORMATION

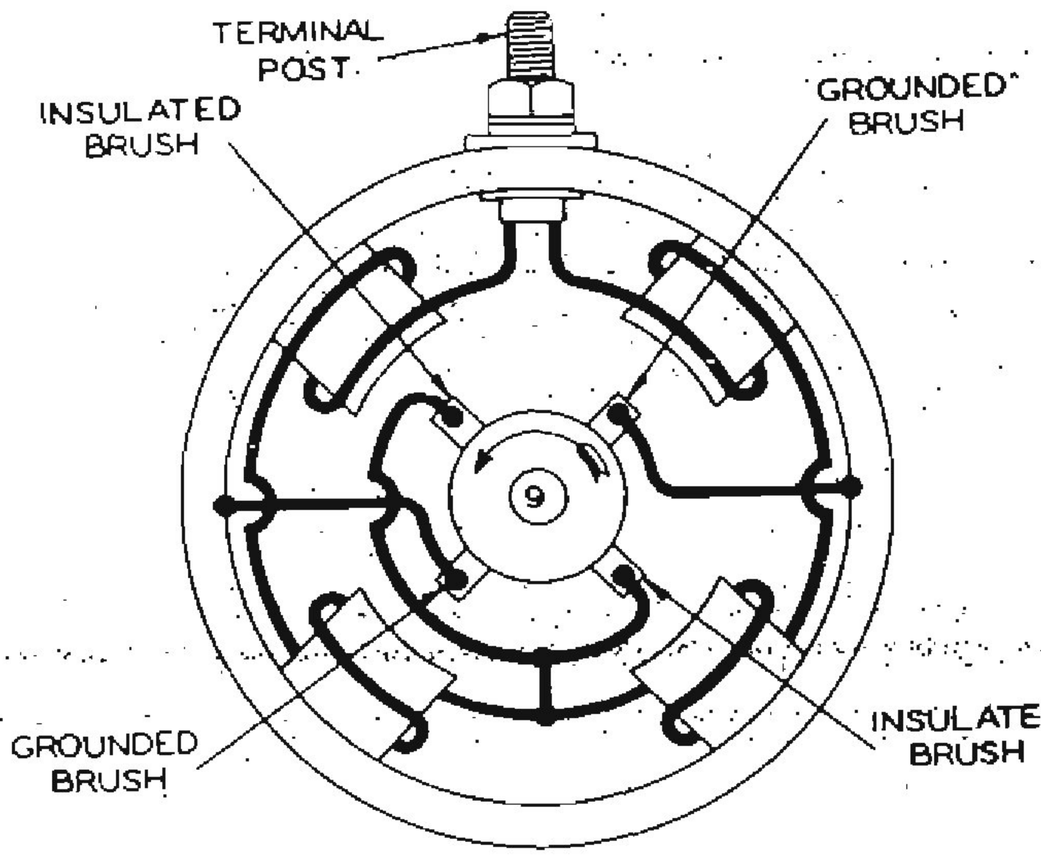

Internal Wiring of
CWDE Motors

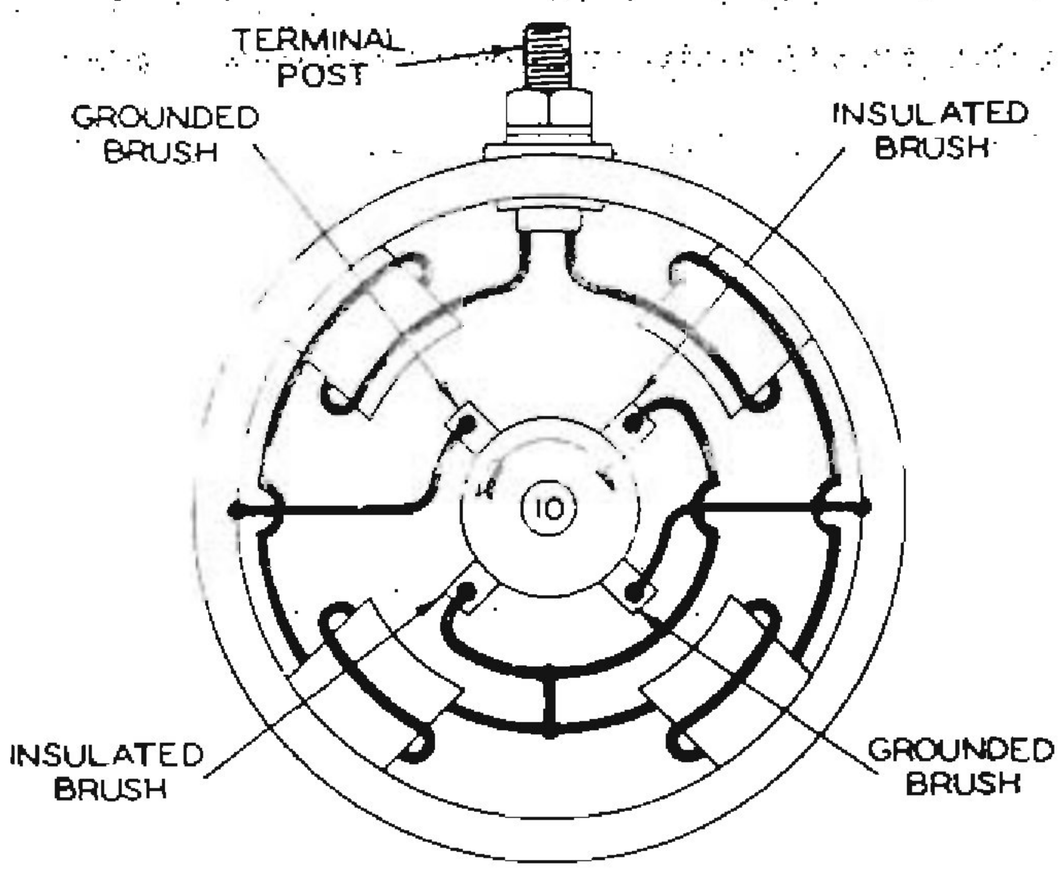

Internal Wiring of
CCWDE Motors

VOLTAGE 12 ROTATION See Tabulation BRUSHES 4 POLES 4

VENTILATED No FRAME DIAMETER 5"

BEARINGS

ML-4369, 4375, 4509, 4510, 4512, 5001, 5002, 5003, 5005, 5006, and 5007 have ball bearings at both ends. ML-4159, 4370, 4371, and 4381 have absorbent bronze bearings at both ends. ML-5004 has a ball bearing at the commutator end and an absorbent bronze bearing at the drive end.

All others have an absorbent bronze bearing at the commutator end and a ball bearing at the drive end.

LUBRICATION

Soak absorbent bronze bearings and felt oiling pad with SAE 20 oil. Allow excess oil to drain out before assembling end head on motor. Pack open ball bearings 1/4 to 1/2 full with a good grade ball bearing lubricant.

BRUSH REPLACEMENT

Replace brushes when they have worn to a length of 1/4" or less.

SPRING TENSION

32 to 40 ounces with new brushes. Measure with a spring scale hooked under the brush spring at the brush. Pull the scale on a line opposite the line of force exerted by the brush spring and take the reading just as the spring leaves the brush.

END PLAY

Adjust to .005" minimum with thrust washers on the commutator end of the armature shaft. Refer to Parts & Equipment List for thrust washer package.

TEST SPECIFICATIONS ($77^{o}F/25^{o}C$)

	Terminal Voltage	Maximum Amperes	RPM	Torque Ft. Lbs.
No Load Test	10	60	5600 Min.	- 0 -
Stall Torque Test	2	370	- 0 -	10.3

prestolite.
SERVICE
INFORMATION

Unit	Rotation	Internal Wiring
ML-4159	CCWDE	Figure 4
ML-4335	CWDE	Figure 1
ML-4336	CWDE	Figure 1
ML-4341	CWDE	Figure 1
ML-4342,A	CWDE	Figure 1
ML-4344	CWDE	Figure 1
ML-4347	CWDE	Figure 1
ML-4349	CWDE	Figure 1
ML-4355,A	CWDE	Figure 1
ML-4357	CWDE	Figure 1
ML-4359,A	CWDE	Figure 1
ML-4360,A	CWDE	Figure 1
ML-4361,A	CCWDE	Figure 2
ML-4364	CWDE	Figure 1
ML-4365,F	CWDE	Figure 1
ML-4368	CWDE	Figure 1
ML-4369	CWDE	Figure 1
ML-4370	CCWDE	Figure 4
ML-4371	CWDE	Figure 3
ML-4373	CWDE	Figure 3
ML-4374	CWDE	Figure 3
ML-4375	CWDE	Figure 1
ML-4379	CWDE	Figure 3
ML-4381	CWDE	Figure 3
ML-4501,S	CWDE	Figure 1
ML-4502,A,B	CWDE	Figure 1
ML-4503	CWDE	Figure 1
ML-4504	CWDE	Figure 1
ML-4505	CWDE	Figure 1
ML-4506	CCWDE	Figure 2
ML-4507	CWDE	Figure 1
ML-4508	CWDE	Figure 1
ML-4509	CWDE	Figure 1
ML-4510	CWDE	Figure 1
ML-4511	CCWDE	Figure 2
ML-4512	CWDE	Figure 1
ML-5001	CWDE	Figure 1
ML-5002	CCWDE	Figure 2
ML-5003	CWDE	Figure 1
ML-5004	CCWDE	Figure 4
ML-5005	CCWDE	Figure 2
ML-5006	CWDE	Figure 1
ML-5007	CWDE	Figure 1

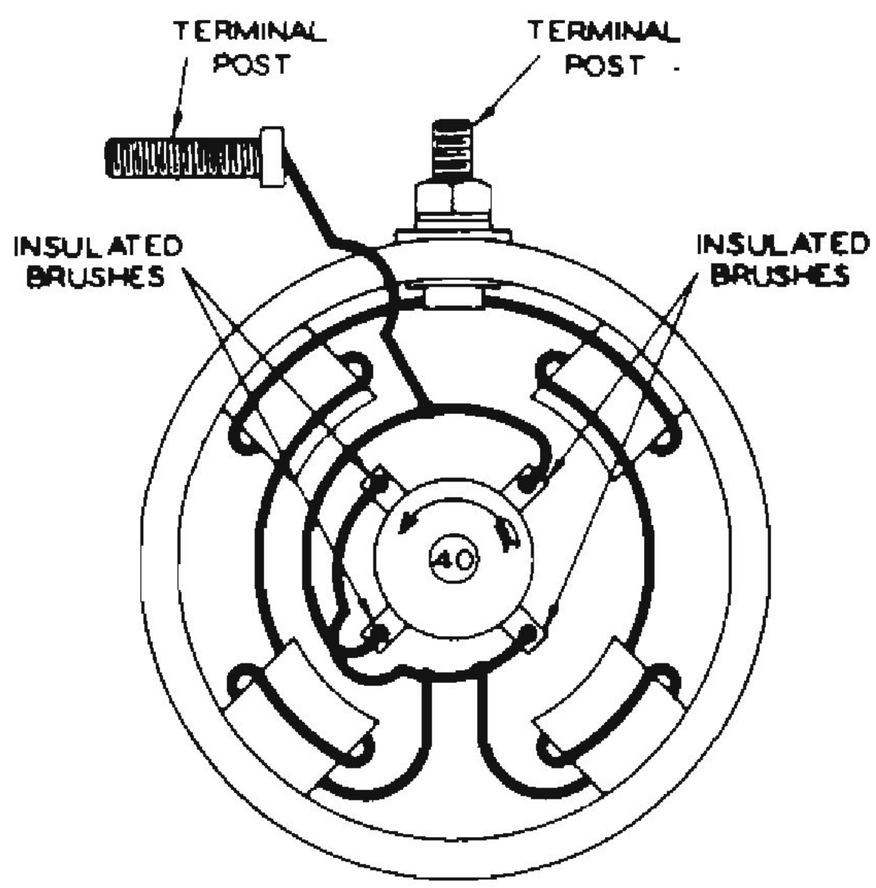

VIEWED FROM COMMUTATOR END

Figure 1

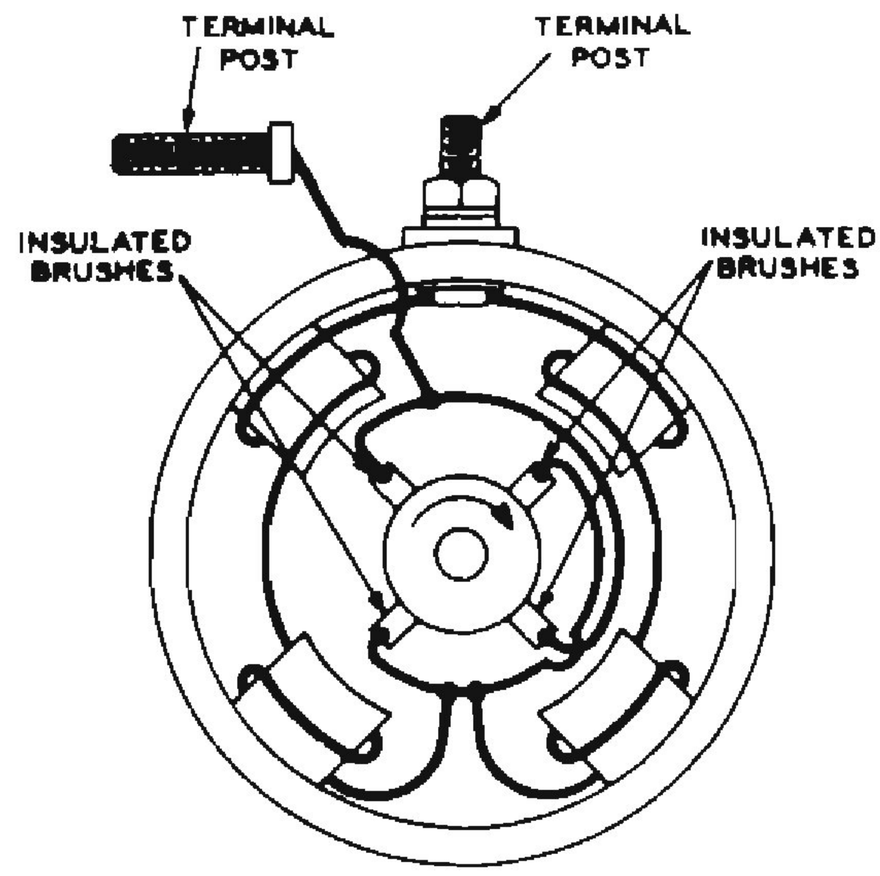

VIEWED FROM COMMUTATOR END

Figure 2

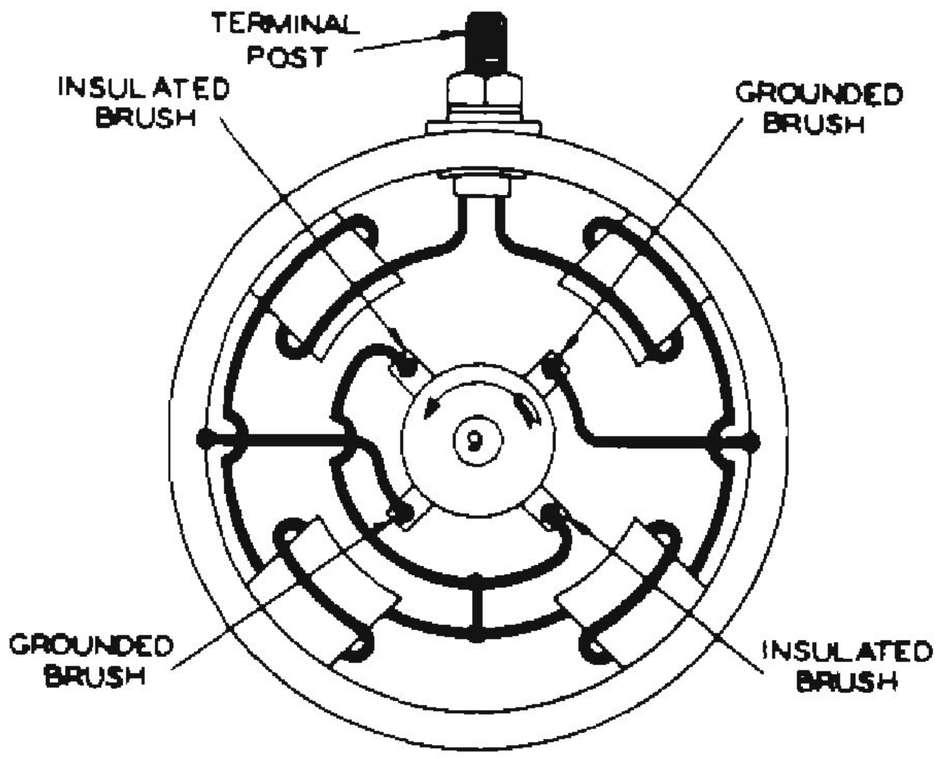

VIEWED FROM COMMUTATOR END

Figure 3

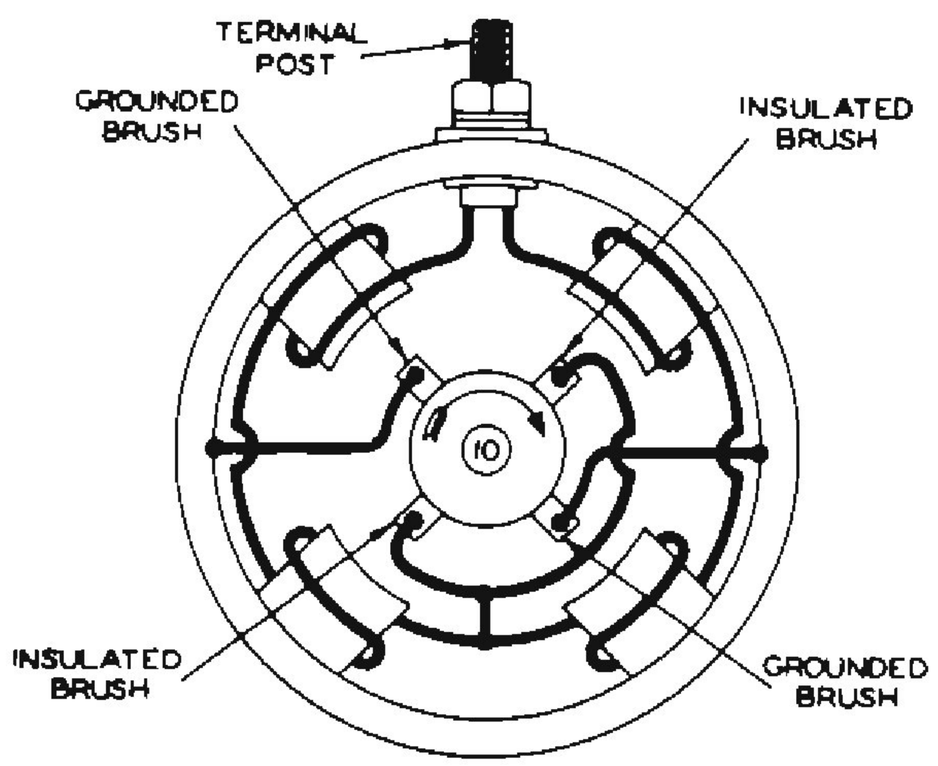

VIEWED FROM COMMUTATOR END

Figure 4