VOLTAGE 24 ROTATION Reversible BRUSHES 4 POLES 4

VENTILATED Yes FRAME DIAMETER 5-9/16"

LUBRICATION

D.E. bearing prelubricated and sealed. C.E. bearing sealed one side only. At overhaul fill reservoir in C.E. head 1/2 full with a good grade ball bearing lubricant.

ARMATURE TEST

These armatures have standard winding connections and can be tested on a growler using a metal strip or hacksaw blade to locate shorted windings.

COMMUTATOR

Minimum diameter 1.60". Replace armature when commutator has worn to this dimension.

BRUSH REPLACEMENT

Replace brushes when they have worn to a length of 1/2" or less.

SPRING TENSION

20-22 ounces with new brushes measure with a spring scale hooked under the brush spring at the brush. Pull the scale on a line opposite the line of force exerted by the brush spring and take the reading just as the spring leaves the brush.

BRUSH ADJUSTMENT

These motors have an adjustable brush card. The brush card should be adjusted to neutral, or with hold down screws in the center of the adjusting slots.

TEST SPECIFICATIONS (77°F/25°C)

	Terminal Voltage	Maximum Amperes	RPM	Torque Ft. Lbs.
No Load Test	26.0	10	2100 Min.	0
Light Load Test	26.0	35	1800 Min.	2

prestolite.
SERVICE
INFORMATION

UNIT
MPL-4001
MPL-4002

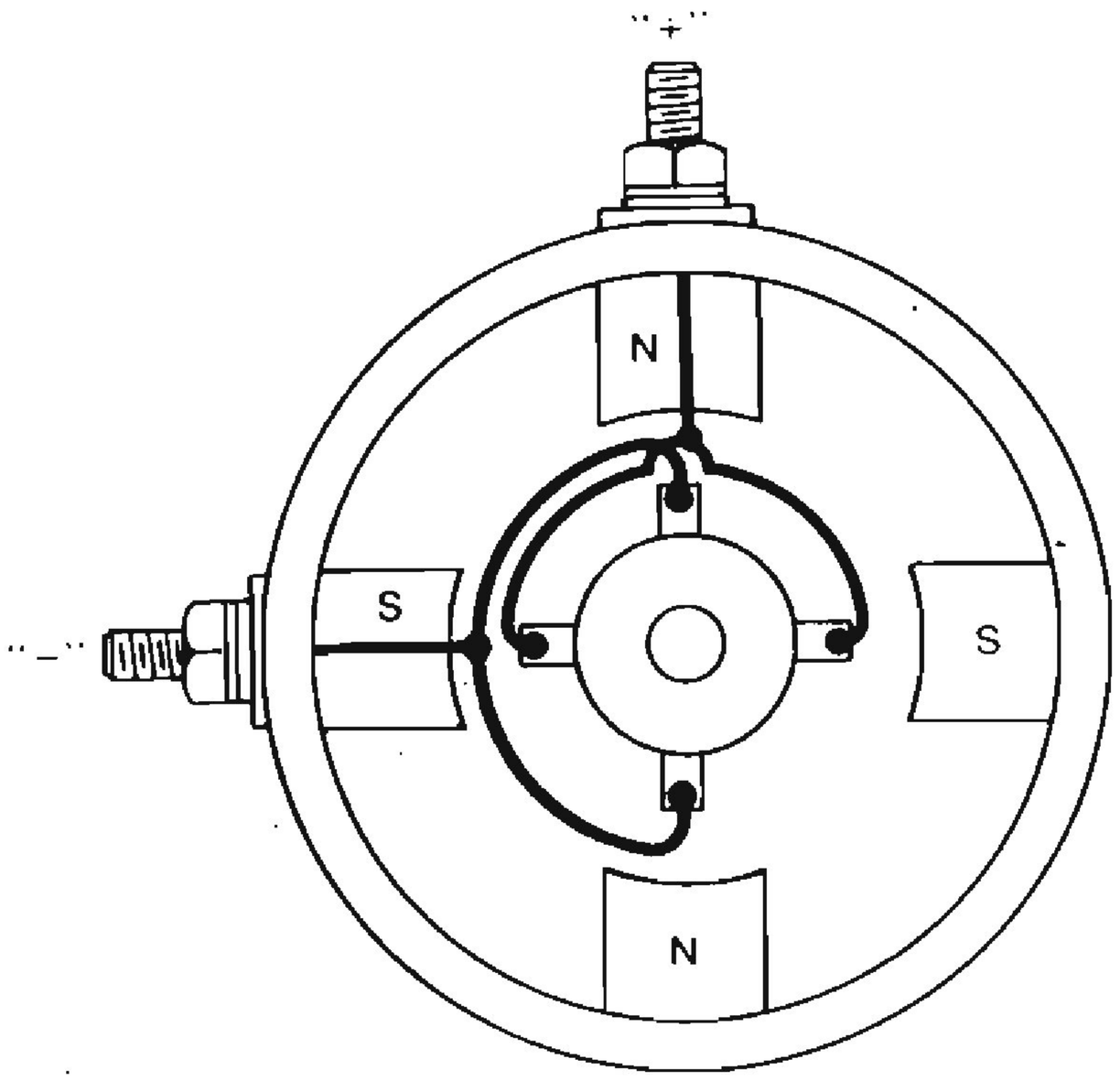

VIEWED FROM COMMUTATOR END

VOLTAGE 24 ROTATION Reversible BRUSHES 4 POLES 4

VENTILATED Yes FRAME DIAMETER 5-1/2"

BEARINGS Ball bearings used at both ends.

LUBRICATION Fill bearing cups half full with Chevron SRI #2 or equivalent before assembly. Assemble sealed side of bearings inward towards armature.

BRUSH REPLACEMENT The brushes must be replaced when they have worn to a length of 3/8" or less.

SPRING TENSION 22 to 30 ounces with new brushes. Measure with a spring scale hooked under the brush spring at the brush. Pull the scale on a line opposite the line of force exerted by the brush spring and take the reading just as the spring leaves the brush.

TEST CONNECTIONS

CCWDE	CWDE
Connect battery positive to - terminal	Connect battery positive to + terminal
Connect battery negative to + terminal	Connect battery negative to - terminal

TEST SPECIFICATIONS (77°F/25°C)

	Terminal Voltage	Maximum Amperes	RPM	Torque Ft. Lbs.
No Load Test	26	6	2200	- 0 -
Stall Torque Test	26	210	- 0 -	16.5

Unit	Special Notes
MPL-4001	See Note

Note - Internal wiring diagram does not illustrate circuit breaker.

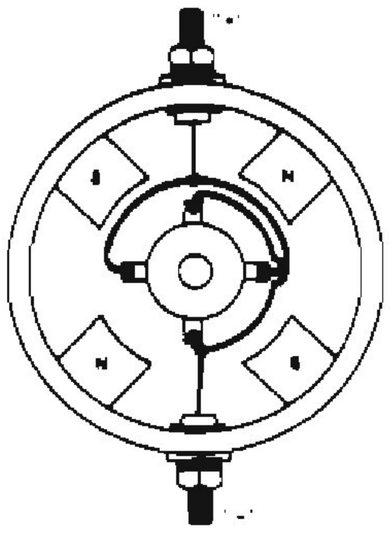

VIEWED FROM COMMUTATOR END