VOLTAGE See Tabulation ROTATION Reversible BRUSHES 4

POLES 4 VENTILATED Yes FRAME DIAMETER 6-5/8"

LUBRICATION — None required. Prelubricated and sealed ball bearings used at both ends of motor.

FIELD RESISTANCE (77°F) — .0156 to .0190 ohms measured between terminals S-1 and S-2.

ARMATURE TEST — These armatures have standard winding connections and can be tested on a growler to locate shorted windings.

COMMUTATOR — Minimum diameter 2.750". Replace armature when commutator has worn to this dimension.

BRUSH REPLACEMENT — Replace brushes when they have worn to a length of 9/16" or less.

SPRING TENSION — 30 to 36 ounces with new brushes. Measure with a spring scale hooked under the brush spring at the brush. Pull the scale on a line opposite the line of force exerted by the brush spring and take the reading just as the brush spring leaves the brush.

TEST CONNECTIONS

CWDE	CCWDE
Connect S-2 to battery positive	Connect S-2 to battery positive
Connect S-1 to A-2	Connect S-1 to A-1
Connect A-1 battery negative	Connect A-2 to battery negative

TEST SPECIFICATIONS (77°F/25°C) Test in both directions of rotation.

	Terminal Voltage	Maximum Amperes	RPM	Torque Ft. Lbs.
No Load Test	12	22	1870 min.	- 0 -
Light Load Test	35.9	70	2240 to 2580	5

prestolite.
SERVICE
INFORMATION

UNIT	VOLTAGE	INTERNAL WIRING
MST-4002,A	48	Fig. 1
MST-4003	36	Fig. 2
MST-4004	48	Fig. 1
MST-4005	48	Fig. 1

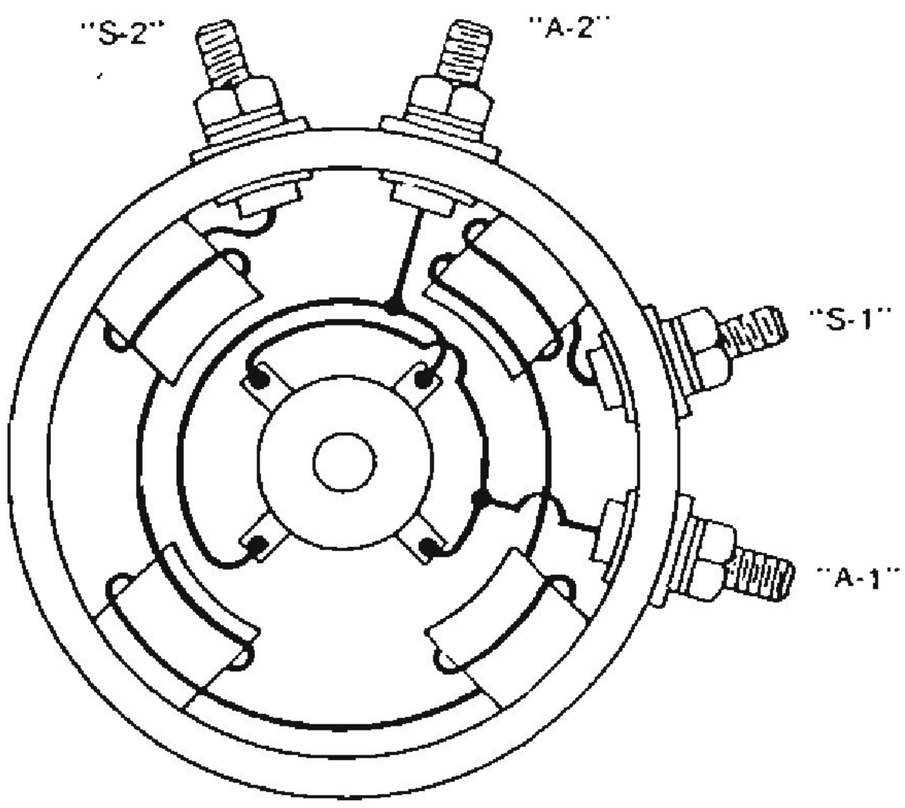

VIEWED FROM COMMUTATOR END

FIG. 1

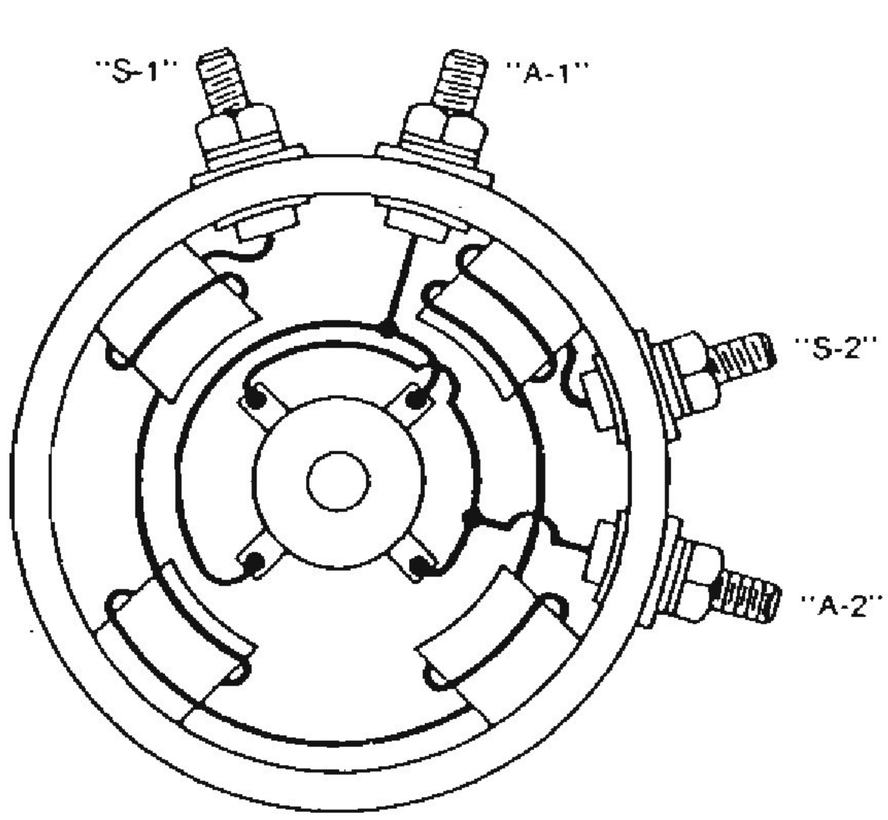

VIEWED FROM COMMUTATOR END

FIG. 2

VOLTAGE 48

ROTATION CWDE

BRUSHES 4

POLES 4

VENTILATED Yes

FRAME DIAMETER 6-5/8"

LUBRICATION — None required. Prelubricated and sealed ball bearings used at both ends of motor.

FIELD RESISTANCE (77°F) — .0156 to .0190 ohms measured between terminal "S" and field armature strap.

ARMATURE TEST — These armatures have standard winding connections and can be tested on a growler to locate shorted windings.

COMMUTATOR — Minimum diameter 2.750". Replace armature when commutator has worn to this dimension.

BRUSH REPLACEMENT — Replace brushes when they have worn to a length of 9/16" or less.

SPRING TENSION — 30 to 36 ounces with new brushes. Measure with a spring scale hooked under the brush spring at the brush. Pull the scale on a line opposite the line of force exerted by the brush spring and take the reading just as the brush spring leaves the brush.

TEST SPECIFICATIONS (77°F/25°C)

	Terminal Voltage	Maximum Amperes	RPM	Torque Ft. Lbs.
No Load Test	12	22	1850 Min.	0
Light Load Test	35.9	70	2240-2580	5

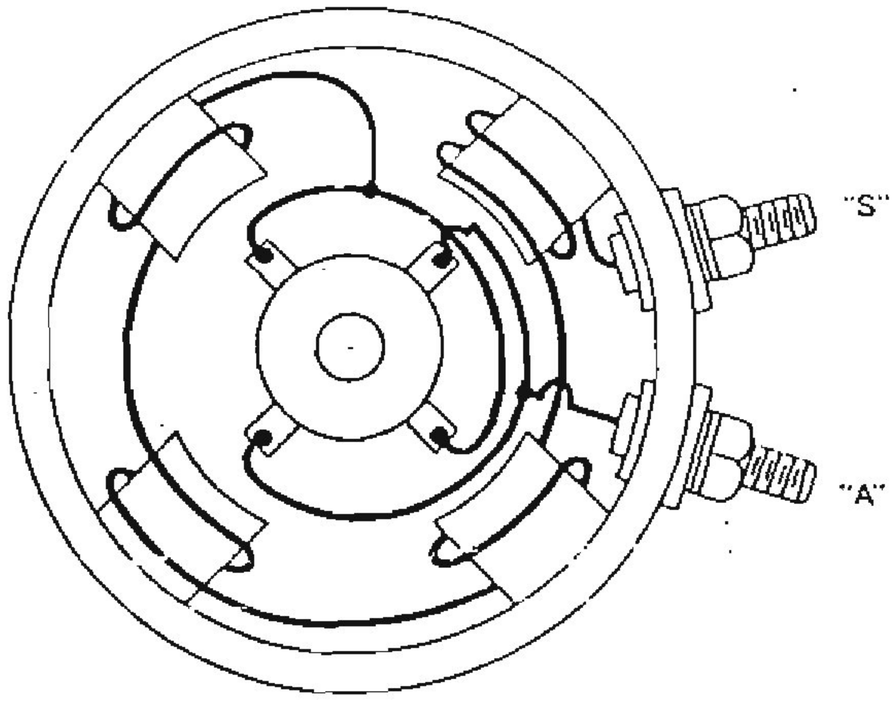

INTERNAL WIRING
VIEWED FROM COMMUTATOR END