VOLTAGE 72 ROTATION See Tabulation BRUSHES 8 POLES 4

VENTILATED Yes FRAME DIAMETER 7-1/8"

LUBRICATION — None required. Prelubricated and sealed ball bearings used at both ends of motor.

FIELD RESISTANCE (77°F/25°C) — .0116 to .0132 ohms measured between "S" terminal and field strap.

ARMATURE TEST — These armatures have standard winding connections and can be tested on a growler using a metal strip or hacksaw blade to locate shorted windings.

COMMUTATOR — Minimum diameter 2.938". Replace armature when commutator has worn to this dimension.

BRUSH REPLACEMENT — Replace brushes when they have worn to a length of 9/16" or less.

SPRING TENSION — 30 to 36 ounces with new brushes. Measure with a spring scale hooked under the brush spring at the brush. Pull the scale on a line opposite the line of force exerted by the brush spring and take the reading just as the brush spring leaves the brush.

TEST CONNECTIONS (Reversible Motors)

CWDE	CCWDE
Connect A-1 to battery positive	Connect A-2 to battery positive
Connect A-2 to S-1	Connect A-1 to S-1
Connect S-2 to battery negative	Connect S-2 to battery negative

TEST SPECIFICATIONS (77°F/25°C) Test reversible motors in both directions of rotation.

	Terminal Voltage	Maximum Amperes	RPM	Torque Ft. Lbs.
No Load Test	12	20	1270 Min.	0
Light Load Test	73.12	81	2740/3160	10

prestolite.
SERVICE
INFORMATION

UNIT	ROTATION	INTERNAL WIRING
MTB-4001	CCWDE	Figure 1
MTB-4002	Reversible	Figure 2

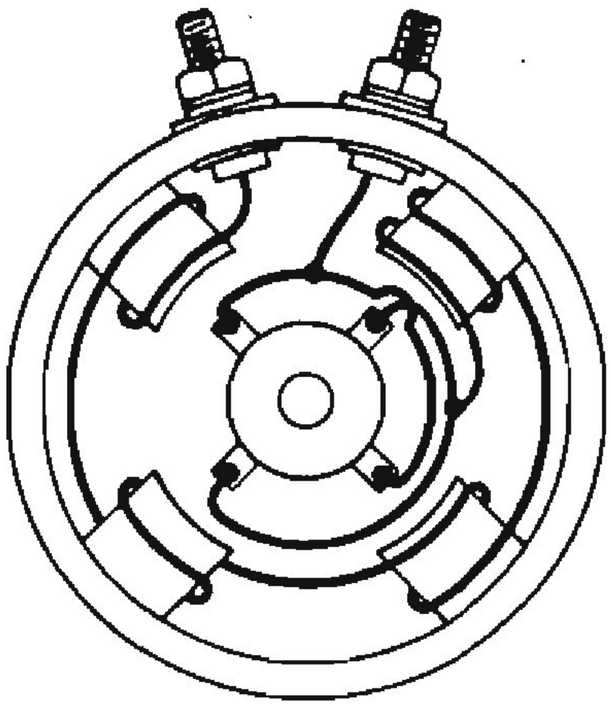

VIEWED FROM DRIVE END

FIGURE 1

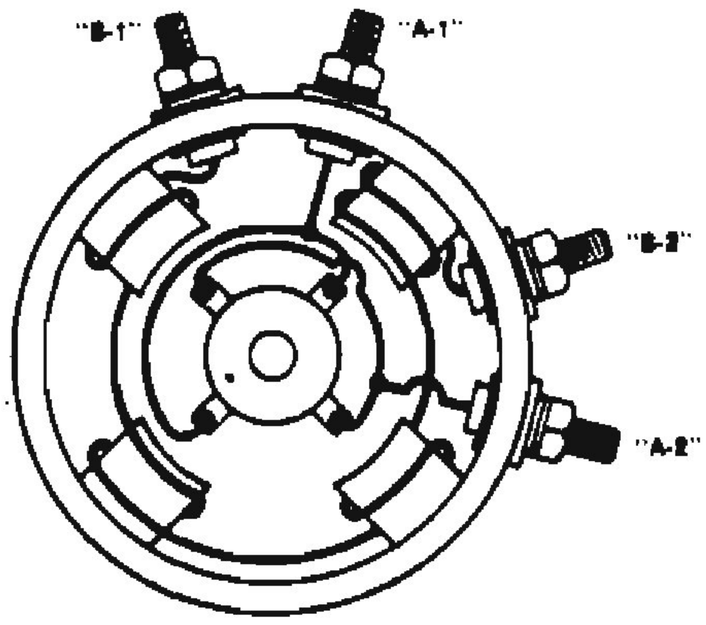

VIEWED FROM COMMUTATOR END

FIGURE 2