VOLTAGE 96 ROTATION Reversible BRUSHES 8 POLES 4

VENTILATED Yes FRAME DIAMETER 7-1/8"

LUBRICATION — None required. Prelubricated and sealed ball bearings used at both ends of motor.

FIELD RESISTANCE (77°F/25°C) — .0087 to .0106 ohms measured between S-1 and S-2 terminals.

ARMATURE TEST — These armatures have standard winding connections and can be tested on a growler using a metal strip or hacksaw blade to locate shorted windings.

COMMUTATOR — Minimum diameter 2.75". Replace armature when commutator has worn to this dimension.

BRUSH REPLACEMENT — Replace brushes when they have worn to a length of 9/16" or less.

SPRING TENSION — 30 to 36 ounces with new brushes. Measure with a spring scale hooked under the brush spring at the brush. Pull the scale on a line opposite the line of force exerted by the brush spring and take the reading just as the spring leaves the brush.

TEST CONNECTIONS

CWDE	CCWDE
Connect A-1 to battery positive	Connect A-2 to battery positive
Connect A-2 to S-1	Connect A-1 to S-1
Connect S-2 to battery negative	Connect S-2 to battery negative

TEST SPECIFICATIONS (77°F/25°C)

	Terminal Voltage	Maximum Amperes	RPM	Torque Ft. Lbs.
No Load Test	12.0	25	1730 Min.	0
Light Load Test	48.2	117	2570 to 3000	10.0

Unit
MTC-4001
MTC-4002

prestolite
SERVICE
INFORMATION

THERMAL PROTECTION - #18 AWG wire leads from thermal protectors (not shown)
NORMALLY OPEN

Contact rating: 6 amps/120 volts
Black leads : close at 120°C (248°F) Max.
White leads : close at 150°C (302°F) Max.

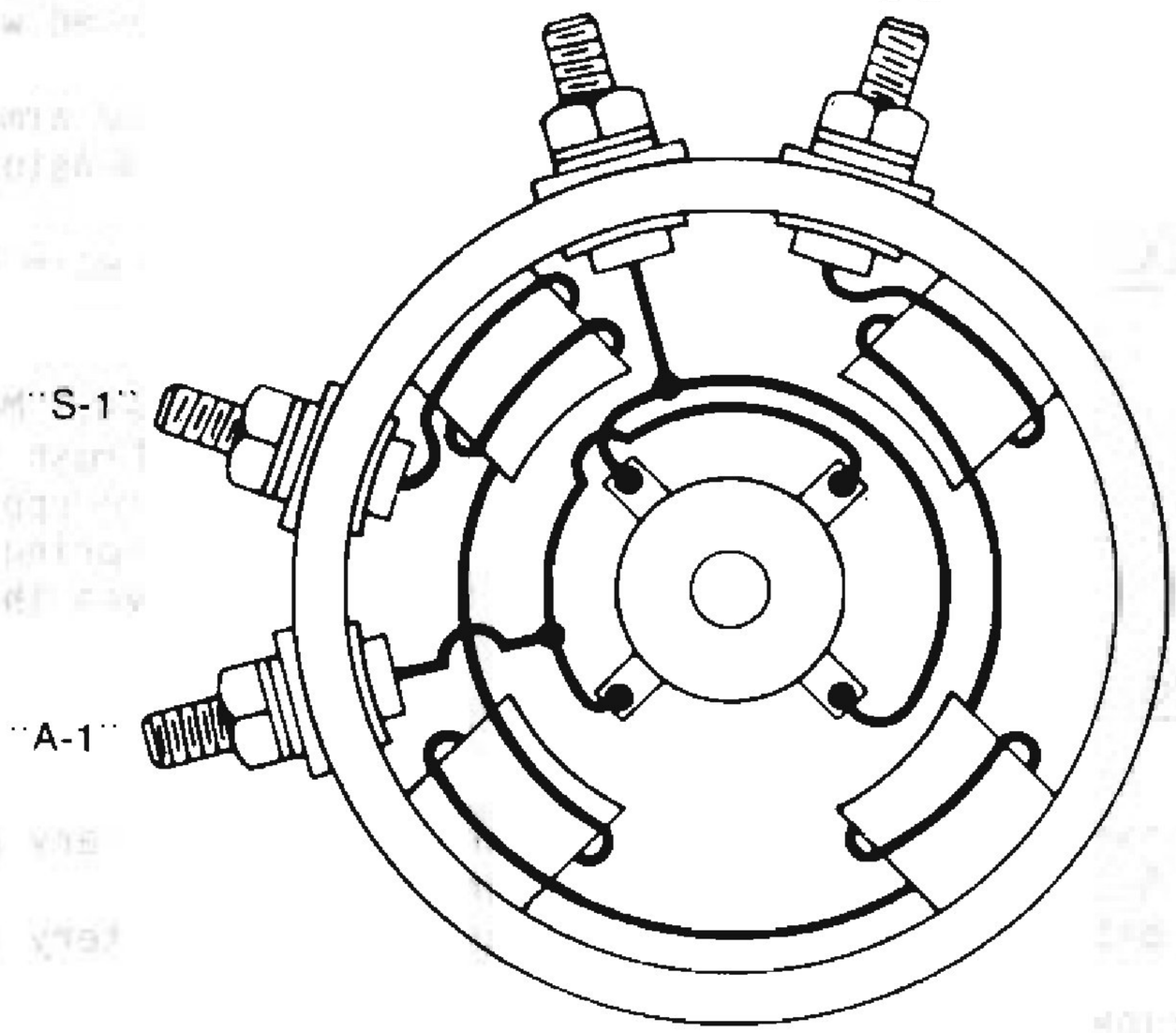

VIEWED FROM COMMUTATOR END