VOLTAGE 72 ROTATION Reversible BRUSHES 8 POLES 4

VENTILATED Yes FRAME DIAMETER 7-1/4"

LUBRICATION	None required. Prelubricated and sealed ball bearing used at the commutator end of the motor. The drive end bearing is furnished by the customer.
FIELD RESISTANCE	77°F/25°C. .0212 to .0257 ohms measured between terminals S-1 and S-2.
ARMATURE TEST	These armatures have standard winding connections and can be tested on a growler for shorted windings.
COMMUTATOR	Minimum diameter 2.938". Replace armature when commutator has worn to this dimension.
BRUSH REPLACEMENT	Replace brushes when they have worn to a length of 9/16" or less.
SPRING TENSION	30 to 36 ounces with new brushes. Measure with a spring scale hooked under the brush spring at the brush. Pull the scale on a line opposite the line of force exerted by the brush spring and take the reading just as the spring leaves the brush.
TESTING NOTE	These motors are supplied to the customer without a drive end bearing. The armature shaft is supported by a bearing in the customer's mounting. DO NOT BENCH TEST WITHOUT THE CUSTOMER MOUNTING.

TEST CONNECTIONS

CWDE	CCWDE
Connect S-1 to battery positive	Connect S-1 to battery positive
Connect S-2 to A-1	Connect S-2 to A-2
Connect A-2 to battery negative	Connect A-1 to battery negative

prestolite.
SERVICE
INFORMATION

TEST SPECIFICATIONS 77°F/25°C.

	TERMINAL VOLTAGE	MAXIMUM AMPERES	RPM	TORQUE FT. LBS.
No load test	12	14	1340 Min.	0
Light load test	66.6	198	1900 to 2195	30

UNIT

MTO-4001
MTO-4002

Internal Wiring

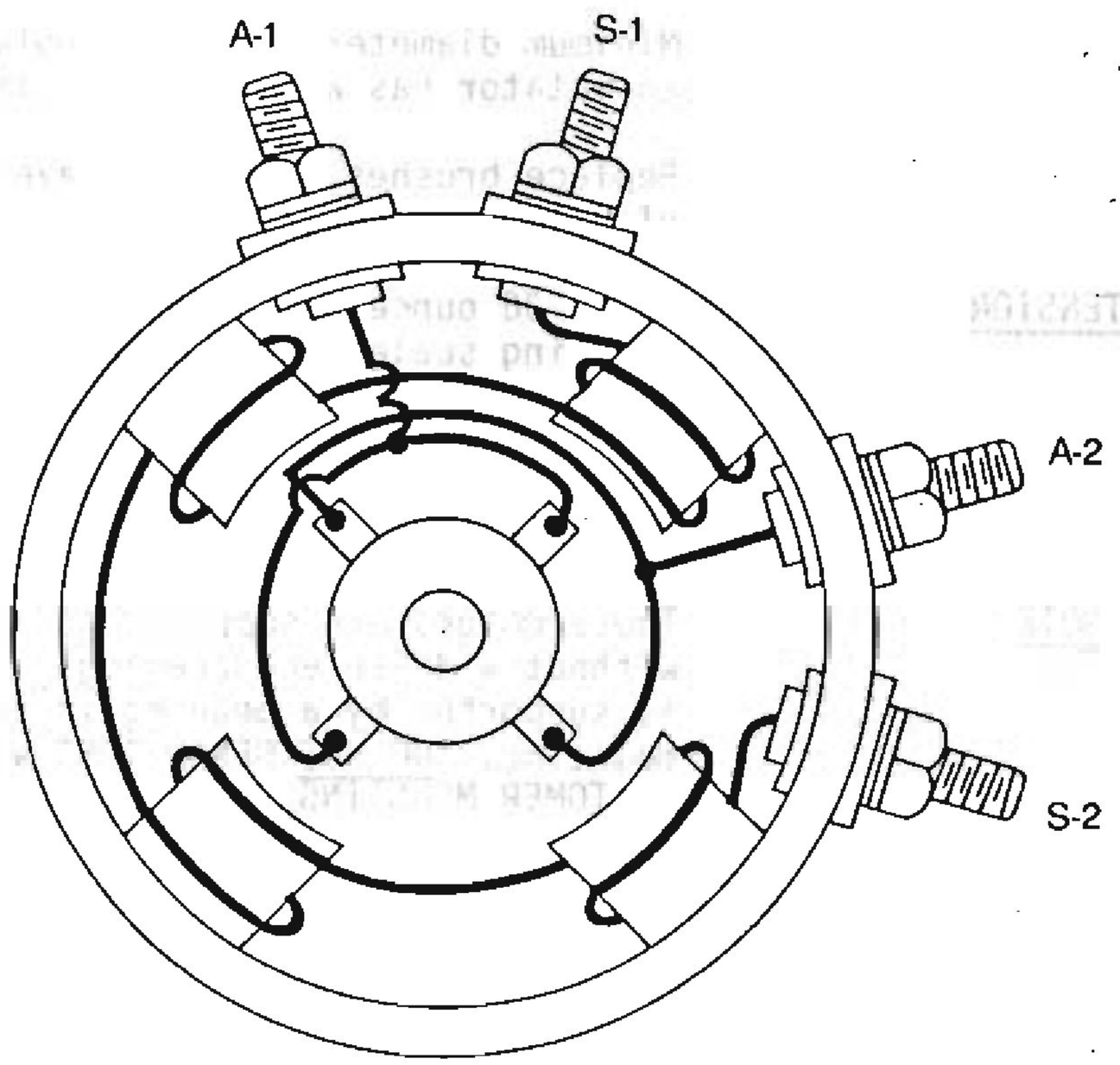

VIEWED FROM COMMUTATOR END