VOLTS 6 ROTATION See Tabulation BRUSHES 4 POLES 4

LUBRICATION — At overhaul, all bronze bearings should be well lubricated with medium engine oil.

Cover armature shaft at drive end with a film of light oil before installing drive.

BRUSH REPLACEMENT — Replace brushes when they have worn to a length of 1/4" or less.

BRUSH SPRING TENSION — 32 to 40 ounces with new brushes. This tension is measured with the scale hooked under the brush spring near the brush and pulled on a line parallel to the face of the brush. Take the reading just as the spring leaves the brush.

TRANSMISSION — Bendix Drive, except the following
MZ-4162 Positive shift overrunning clutch
MZ-4173T Magnetic Shift overrunning clutch
MZ-4141 Drive separate
MZ-4196 Drive separate

END PLAY — Tabulated in Special Instructions

COMMUTATOR END HEAD — Be sure felt oiling pad is in the outer end of the commutator end bearing before assembling the commutator end head on the motor.

TEST SPECIFICATIONS

No Load Draw	5.0 volts, 68 maximum amperes, 4000 minimum RPM.
Stall Torque	2.0 volts, 280 maximum amperes, 4.4 minimum Ft. Lbs.

Unit	Rotation	Pinion Position* Retracted	Pinion Position* Extended	Special Instructions
MZ-4040	CW	1 21/64" - 1 25/64"	12/16" - 7/8"	Notes 1,2,3
MZ-4045	CW	1 11/64" - 1 15/64"	1 11/16" - 1 3/4"	Notes 1,2,3,4
MZ-4046	CW	1 25/32" - 1 27/32"	2 1/2" - 2 9/16"	Notes 1,5
MZ-4046T	CW	1 25/32" - 1 27/32"	2 1/2" - 2 9/16"	Notes 1,5,6
MZ-4051,A	CW	1 25/32" - 1 27/32"	2 1/2" - 2 9/16"	Notes 1,5
MZ-4051T	CW	1 25/32" - 1 27/32"	2 1/2" - 2 9/16"	Notes 1,5,6
MZ-4055	CW	1 1/8" - 1 15/64"	1 5/8" - 1 47/64"	Notes 1,2,7
MZ-4063	CW	1 21/64" - 1 25/64"	13/16" - 7/8"	Notes 1,2,3
MZ-4072	CW	1 15/16" - 2"	1 7/32" - 1 9/32"	Notes 1,2
MZ-4085	CW	1 25/32" - 1 27/32"	2 1/2" - 2 9/16"	Notes 1,5
MZ-4085T	CW	1 25/32" - 1 27/32"	2 1/2" - 2 9/16"	Notes 1,5,6
MZ-4095	CW	2 9/32" - 2 11/32"	3" - 3 1/16"	Notes 8,9

File in the → STARTING MOTOR SECTION

prestolite

SERVICE INFORMATION

Unit	Rotation	Pinion Positions* Retracted	Extended	Special Instructions
MZ-4095T	CW	2 9/32" - 2 11/32"	3" - 3 1/16"	Notes 6,8,9
MZ-4098	CW	1 21/64" - 1 25/64"	13/16" - 7/8"	Notes 1,3,9
MZ-4106,A	CW	1 11/16" - 1 3/4"	2 7/16" - 2 1/2"	Notes 1,9
MZ-4113	CW	23/32" - 25/32"	1 7/16" - 1 1/2"	Notes 1,5,10
MZ-4114	CW	1 15/15" - 2"	1 7/32" - 1 9/32"	Notes 1,2
MZ-4118	CCW	1/8" - 3/16"	27/32" - 29/32"	Notes 1,5
MZ-4123	CW	1 25/32" - 1 27/32"	2 1/2" - 2 9/16"	Notes 1,5
MZ-4127	CW	1 25/32" - 1 27/32"	2 1/2" - 2 9/16"	Notes 1,5
MZ-4130,A	CW	1 21/64" - 1 25/64"	13/16" - 7/8"	Notes 1,2,3
MZ-4135	CW	1 25/32" - 1 27/32"	2 1/2" - 2 9/16"	Notes 1,5
MZ-4138	CW	1 49/64" - 1 53/64"	2 31/64" - 2 35/64"	Notes 1,5
MZ-4138T	CW	1 49/64" - 1 53/64"	2 31/64" - 2 35/64"	Notes 1,5,6
MZ-4140	CW	1 49/64" - 1 53/64"	2 31/64" - 2 35/64"	Notes 5,8
MZ-4141	CW	----------	----------	Notes 1,9
MZ-4144	CW	1 7/32" - 1 11/32"	1 31/32" - 2 3/32"	Notes 5,8
MZ-4146A	CCW	1 25/64" - 1 27/32"	2 1/2" - 2 9/16"	Notes 5,8
MZ-4147	CW	1 15/16" - 2"	1 7/32" - 1 9/32"	Notes 1,2
MZ-4149,A	CW	1 7/32" - 1 11/32"	1 31/32" - 2 3/32"	Notes 8,9
MZ-4150	CW	1 25/32" - 1 27/32"	2 1/2" - 2 9/16"	Notes 1,5
MZ-4152	CW	1 7/32" - 1 11/32"	1 31/32" - 2 3/32"	Notes 1,5
MZ-4153	CW	35/64" - 39/64"	1 1/16" - 1 1/8"	Notes 1,2,3
MZ-4156	CW	1 7/32" - 1 11/32"	1 31/32" - 2 3/32"	Notes 8,9
MZ-4162	CW	45/64" - 55/64"	1 7/32" - 1 3/8"	Notes 8,9,10,11,12
MZ-4166,S	CW	1 7/32" - 1 11/32"	1 31/32" - 2 3/32"	Notes 8,9
MZ-4166T	CW	1 7/32" - 1 11/32"	1 31/32" - 2 3/32"	Notes 6,8,9
MZ-4168T	CW	----------	----------	Notes 1,2,3,6
MZ-4170	CW	1 7/32" - 1 11/32"	1 31/32" - 2 3/32"	Notes 8,9
MZ-4173T	CW	45/64" - 55/64"		Notes 6,8,9,10,12,13
MZ-4174,S	CW	25/32" - 29/32"	1 17/32" - 1 21/32"	Notes 8,9
MZ-4175	CCW	1/8" - 3/16"	13/16" - 7/8"	Notes 1,5
MZ-4175T	CCW	1/8" - 3/16"	13/16" - 7/8"	Notes 1,5,6
MZ-4176	CW	1 7/32" - 1 11/32"	1 31/32" - 2 3/32"	Notes 8,9
MZ-4178	CW	1 7/32" - 1 11/32"	1 31/32" - 2 3/32"	Notes 8,9
MZ-4179	CCW	1 7/32" - 1 11/32"	1 31/32" - 2 3/32"	Notes 8,9
MZ-4180	CW	1 7/32" - 1 11/32"	1 31/32" - 2 3/32"	Notes 8,9
MZ-4181	CCW	1 7/32" - 1 11/32"	1 31/32" - 2 3/32"	Notes 8,9
MZ-4181T	CCW	1 7/32" - 1 11/32"	1 31/32" - 2 3/32"	Notes 6,8,9
MZ-4183	CW	1 25/32" - 1 27/32"	2 1/2" - 2 9/16"	Notes 1,5
MZ-4184	CCW	1/8" - 3/16"	13/16" - 7/8"	Notes 1,5
MZ-4187,A	CW	25/32" - 29/32"	1 17/32" - 1 21/32"	Notes 8,9
MZ-4187T	CW	25/32" - 29/32"	1 17/32" - 1 21/32"	Notes 6,8,9
MZ-4188	CCW	11/16" - 57/64"	1 7/16" - 1 41/64"	Notes 8,9,14
MZ-4189	CW	1 7/32" - 1 11/32"	1 31/32" - 2 3/32"	Notes 8,9
MZ-4190	CW	1 7/32" - 1 11/32"	1 31/32" - 2 3/32"	Notes 8,9
MZ-4192	CCW	1/8" - 3/16"	13/16" - 7/8"	Notes 1,9
MZ-4193	CW	1 5/16" - 1 3/8"	1 27/32" - 1 29/32"	Notes 1,2,3
MZ-4194	CCW	1/8" - 3/16"	13/16" - 7/8"	Notes 1,9
MZ-4195	CCW	1/8" - 3/16"	13/16" - 7/8"	Notes 1,9

Unit	Rotation	Pinion Positions* Retracted	Extended	Special Instructions
MZ-4195T	CCW	1/8" - 3/16"	13/16" - 7/8"	Notes 1,9
MZ-4196	CW			Notes 2,15
MZ-4198	CCW	1 7/32" - 1 11/32"	1 31/32" - 2 3/32"	Notes 8,9
MZ-4199	CW	23/32" - 25/32"	1 7/16" - 1 1/2"	Notes 1,5

* These dimensions are measured from the face of the mounting flange to the outside edge of the pinion. Adjust by installing thrust washers just inside the commutator end head, intermediate bearing plate or drive end head as required. Refer to Parts & Equipment List for thrust washer package. Folo-thru Bendix drives may become extended while being worked on. If this happens, adjust to the extended dimension only.

NOTE 1 - 1/16" maximum end play. Refer to Parts & Equipment List for thrust washer package.

NOTE 2 - The drive end bearing must be flush with the bearing bore on the outer end.

NOTE 3 - Bendix retaining nut must be tightened securely. Do not back off to install cotter pin.

NOTE 4 - After installation of new field coils, paint the inside of the frame and soak the field coils with air-drying insulating varnish. Keep varnish off of brush leads, pilot seats, and threads. When reusing the original armature, its core and windings should be given the same treatment being careful to keep the commutator and bearing surfaces clean.

NOTE 5 - The intermediate bearing must be flush with the bearing bore on the side toward the Bendix drive.

NOTE 6 - After inspection of various parts, paint terminal studs and brush holder insulation with red glyptol. Cover glyptol and all metal surfaces except pilots, head seats, threads, commutator and bearing surfaces with air-drying, fungus-resistant insulating varnish. Allow varnish to soak into field coils and armature windings. Drain and dry thoroughly before assembling motor.

NOTE 7 - Bendix retaining nut must be torqued to 25 to 30 Ft. Lbs.

Note 8 - .005" to .030" end play. Refer to Parts & Equipment List for thrust washer package.

NOTE 9 - The intermediate bearing must be flush with the bearing bore on the side toward the armature.

Printed in U.S.A.

prestolite.
SERVICE
INFORMATION

NOTE 10 - The bearing supporting the drive end of the armature shaft is supplied by the customer and not supplied or serviced by Prestolite. However, the bearing is identical with our MP-41A absorbent bronze bearing which can be used if a new bearing is found to be needed.

NOTE 11 - The pinion should reach the extended dimension just as the switch makes contact.

NOTE 12 - Be sure the yoke shoe is assembled with the radial side toward the pinion end.

NOTE 13 - With the plunger sealed and the armature pushed toward the commutator end, a clearnace of 1/16" to 7/64" should be maintained between the outer edge of the pinion stop. Adjust by turning the link screw in or out as required.

NOTE 14 - The pinion positions are measured from the centerline of the outside mounting hole on the mounting pad.

NOTE 15 - .005" to .050" end play. Refer to Parts & Equipment List for thrust washer package.

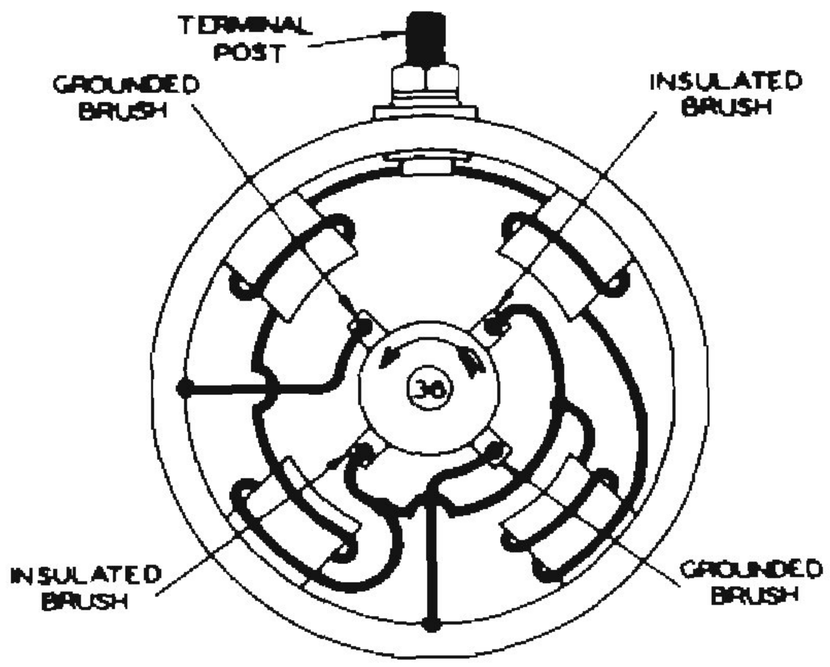

Internal Wiring of
CWDE Motors

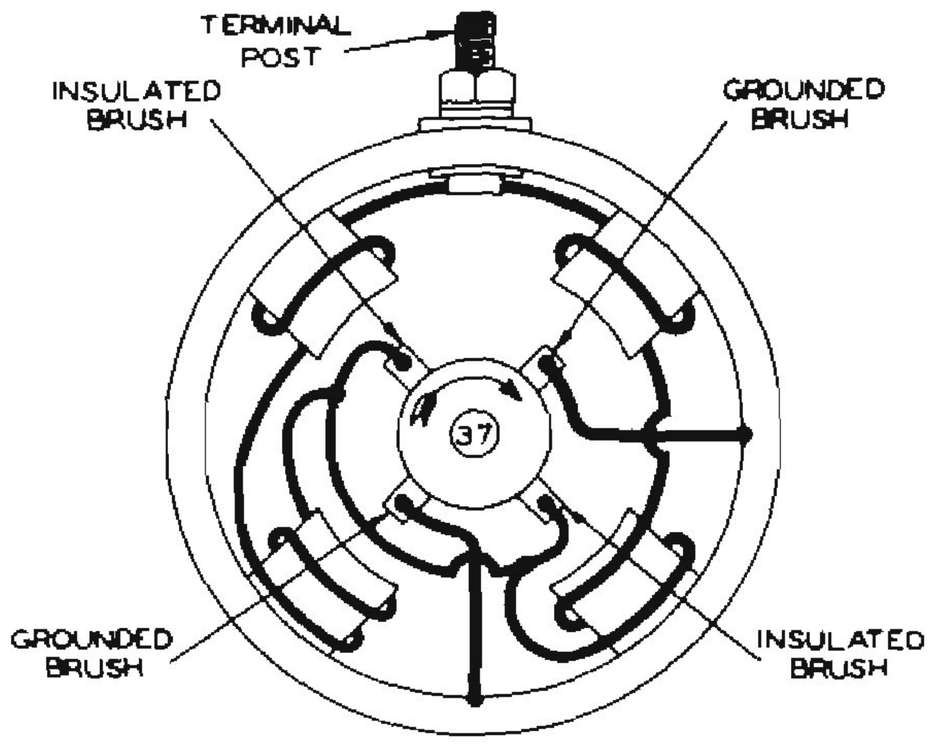

Internal Wiring of
CCWDE Motors

VOLTS See Tabulation ROTATION See Tabulation BRUSHES 4 POLES 4

LUBRICATION

At overhaul, all bronze bearings should be well lubricated with medium engine oil.

Cover armature shaft at drive end with a light film of lubricant before installing drive.

BRUSH REPLACEMENT

Replace brushes when they have worn to a length of 1/4" or less.

BRUSH SPRING TENSION

32 to 40 ounces with new brushed. This tension is measured with the scale hooked under the brush spring near the brush and pulled on a line parallel to the face of the brush. Take the reading just as the spring leaves the brush.

TRANSMISSION

Bendix Drive

END PLAY

Tabulated in Special Instructions

TEST SPECIFICATIONS ($70^{o}F/21^{o}C$) 6 Volt
No Load Draw 5.0 volts, 68 maximum amperes, 4000 minimum RPM.
Stall Torque 2.0 volts, 280 maximum amperes, 4.4 minimum Ft. Lbs.

TEST SPECIFICATIONS ($70^{o}F/21^{o}C$) 12 Volt
No Load Draw 10.0 volts, 75 maximum amperes, 5500 minimum RPM.
Stall Torque 4.0 volts, 560 maximum amperes, 11.1 minimum Ft. Lbs.

TEST SPECIFICATIONS ($70^{o}F/21^{o}C$) 12 Volt with 3.38:1 Gear Reduction
No Load Draw 10.0 volts, 75 maximum amperes, 1700 minimum RPM.
Stall Torque 4.0 volts, 560 maximum amperes, 37.5 minimum Ft. Lbs.

Unit	Volts	Rotation	Pinion Position*	Special Instructions
MZ-4202	6	CWDE	1 3/8" - 1 7/16"	Notes 1,2A,3,4
MZ-4203	12	CWDE	1 31/32"- 2 5/32"	Notes 1,2B,4
MZ-4204,R	12	CWDE	1 3/4" - 1 7/8"	Notes 2C,5,6,7,8,15
MZ-4205,R	12	CWDE	1 3/4" - 1 7/8"	Notes 2C,5,6,8,9,10,11
MZ-4206,R	12	CWDE	1 3/4" - 1 7/8"	Notes 2C,5,6,8,9,10,11
MZ-4207,R	12	CWDE	1 3/4" - 1 7/8"	Notes 2C,5,6,8,9,10,11
MZ-4208,R	12	CWDE	1 3/4" - 1 7/8"	Notes 2C,5,6,8,9,10,11
MZ-4209	6	CCWDE	1 3/32"- 1 15/64"	Notes 1,2D,9
MZ-4212	6	CCWDE	3/16"- 23/64"	Notes 1,2E,6,7,13
MZ-4212T	6	CCWDE	3/16"- 23/64"	Notes 1,2E,6,7,13,14
MZ-4213	6	CCWDE	3/16"- 23/64"	Notes 1,2E,6,7,13
MZ-4214	12	CCWDE	----------	----------

prestolite.
SERVICE
INFORMATION

Unit	Volts	Rotation		Pinion Position*	Special Instructions
MZ-4216,R	12	CCWDE	1	3/4" - 1 27/32"	Notes 2C,5,6,7,8,9,10,11
MZ-4217,R	12	CWDE	1	3/4" - 1 27/32"	Notes 2C,5,6,7,8,9,10,11
MZ-4218,R	12	CWDE	1	3/4" - 1 27/32"	Notes 2C,5,6,7,8,9,10,11
MZ-4219,R	12	CWDE	1	3/4" - 1 27/32"	Notes 2C,5,6,7,8,9,10,11
MZ-4220,R	12	CCWDE	1	3/4" - 1 27/32"	Notes 2C,5,6,7,8,9,10,11
MZ-4221,R	12	CWDE	1	3/4" - 1 27/32"	Notes 2C,5,6,7,8,9,10,11
MZ-4222,R	12	CWDE	1	3/4" - 1 27/32"	Notes 2C,5,6,7,8,9,10,11
MZ-4223,R	12	CWDE	1	3/4" - 1 27/32"	Notes 2C,5,6,7,8,9,10,11
MZ-4224,R	12	CWDE	1	3/4" - 1 27/32"	Notes 2C,5,6,7,8,9,10,11
MZ-4225,R	12	CWDE	1	3/4" - 1 27/32	Notes 2C,5,6,7,8,9,10,11
MZ-4226,R	12	CWDE	1	3/4" - 1 27/32	Notes 2C,5,6,7,8,9,10,11

NOTE 1 - 1/16" maximum end play. Refer to Parts & Equipment List for thrust washer package.

NOTE 2 - The dimensions listed below are with the drive in the extended position.

A	-	55/64" - 59/64"
B	-	1 7/32" - 1 13/32"
C	-	2 3/8" - 2 1/2"
D	-	1 39/64" - 1 3/4"
E	-	53/64" - 63/64"

NOTE 3 - The Bendix retaining nut must be tightened securely. Do not back off to install cotter pin.

NOTE 4 - The drive end bearing must be flush with the bearing bore on the outside end.

NOTE 5 - .005" minimum end play (motor only). Refer to Parts & Equipment List for thrust washer package.

NOTE 6 - The Bendix retaining pin must not project beyond the outside diameter of the pinion sleeve.

NOTE 7 - The intermediate bearing must be flush with the bearing bore on the side toward the armature.

NOTE 8 - The pinion positions are measured from the centerline of the mounting hole nearest the drive end to the outside edge of the pinion.

NOTE 9 - The outer pinion housing bearing must be flush with the bearing bore on the outside end.

NOTE 10 - At overhaul, lubricate entire shaft under Bendix drive. Full groove in shaft at drive end and pack gear box with 1-1/4 to 2 ounces of Lithium Soap Base Grease #1925 Molytex "O" or equivalent.

NOTE 11 - These motors have 3.38:1 gear reduction.

NOTE 12 - Torque Bendix retaining nut to 25 to 30 Ft. Lbs.

NOTE 13 - Cover armature shaft with film of Lubriplate #777 before installing drive.

NOTE 14 - After inspection of various parts, paint terminal studs and brush holder insulation with red glyptol. Cover glyptol and all metal surfaces except pilots, head seats, threads, commutator and bearing surfaces with an air-drying, fungus-resistant insulating varnish. Allow varnish to soak into field coils and armature windings. Drain and dry thoroughly before assembling the motor.

NOTE 15 - Use "Loctite Grade A" on threads of bearing plate retaining screws. Torque screws to 25 to 35 in/lbs.

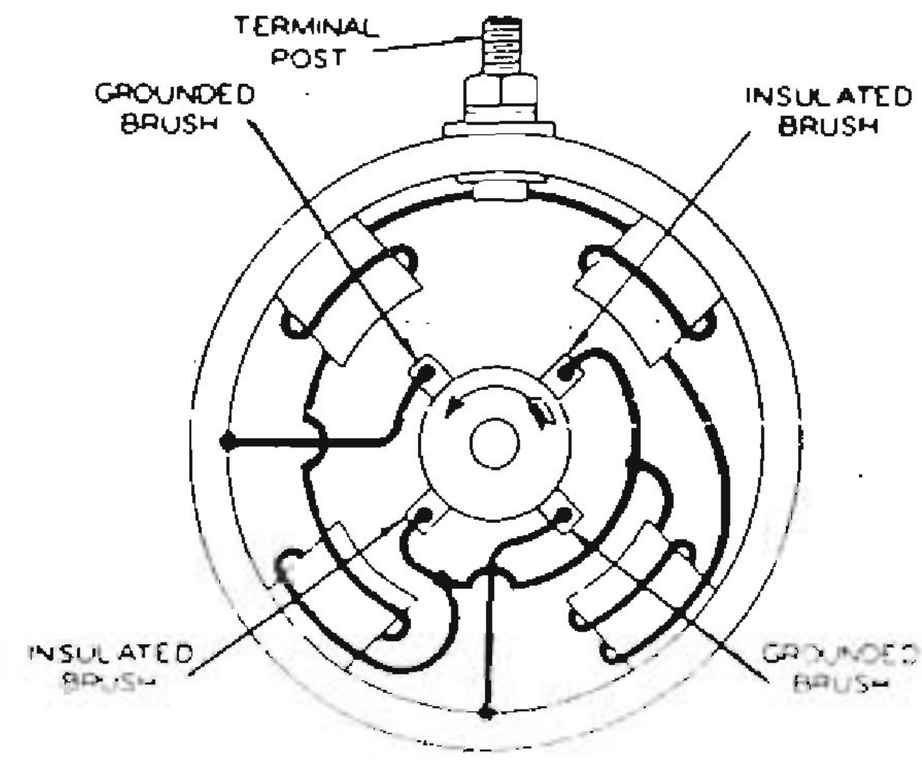

Internal Wiring of
CWDE Motors

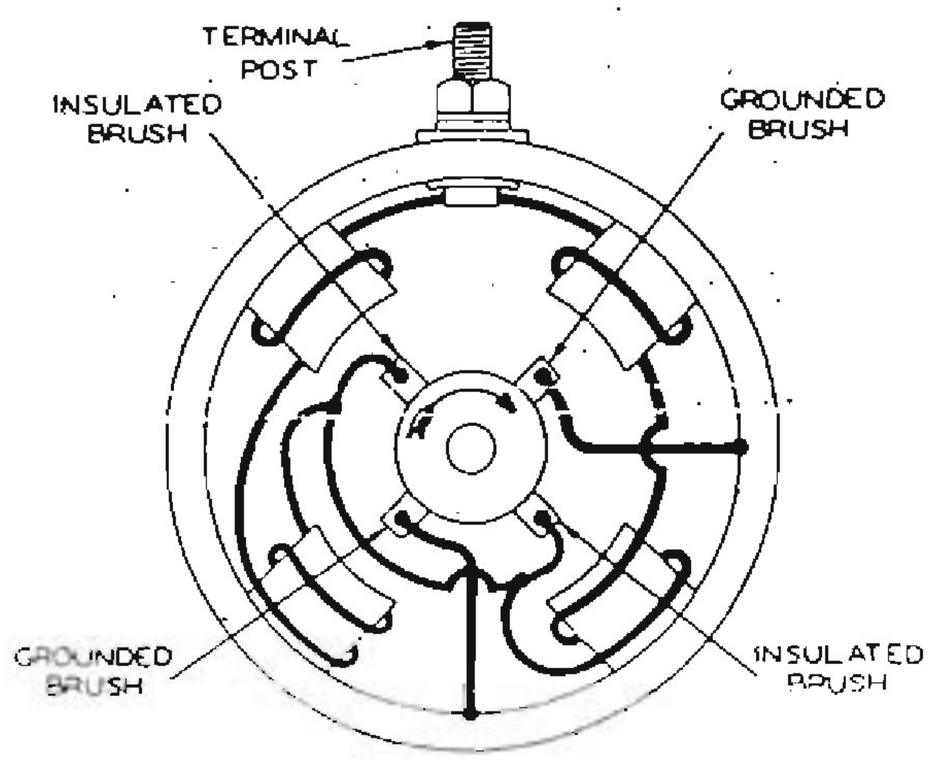

Internal Wiring of
CCWDE Motors

VOLTAGE See Tabulation ROTATION CCWDE BRUSHES 4 POLES 4

VENTILATED No FRAME DIAMETER 4"

BEARINGS Absorbent bronze bearing used at commutator end. Ball bearing used at drive end.

LUBRICATION Soak absorbent bronze bearing and felt oiling pad with SAE 20 oil. Allow excess oil to drain out before assembling end head on motor. Pack open ball bearings 1/4 to 1/2 full with a good grade ball bearing lubricant.

BRUSH REPLACEMENT Replace brushes when they have worn to a length of 1/4" or less.

SPRING TENSION 42 to 53 ounces with new brushes. Measure with a spring scale hooked under the brush spring at the brush. Pull the scale on a line opposite the line of force exerted by the brush spring and take the reading just as the spring leaves the brush.

END PLAY Adjust to .005 minimum with thrust washers on the commutator end of the armature shaft. Refer to Parts & Equipment List for thrust washer package.

TEST SPECIFICATIONS (6 volt 77°F)

	Terminal Voltage	Maximum Amperes	RPM	Torque Ft. Lbs.
No Load Test	5	60	4700 Min.	------
Stall Torque Test	2	280	0	4.4

TEST SPECIFICATIONS (12 volt 77°F)

	Terminal Voltage	Maximum Amperes	RPM	Torque Ft. Lbs.
No Load Test	10	50	8000 Min.	------
Stall Torque Test	3	420	0	7.3

prestolite.
SERVICE
INFORMATION

Unit	Voltage	Internal Wiring
MZ-4177	6	Figure 1
MZ-4186	6	Figure 2
MZ-4201	6	Figure 2
MZ-4210	12	Figure 2

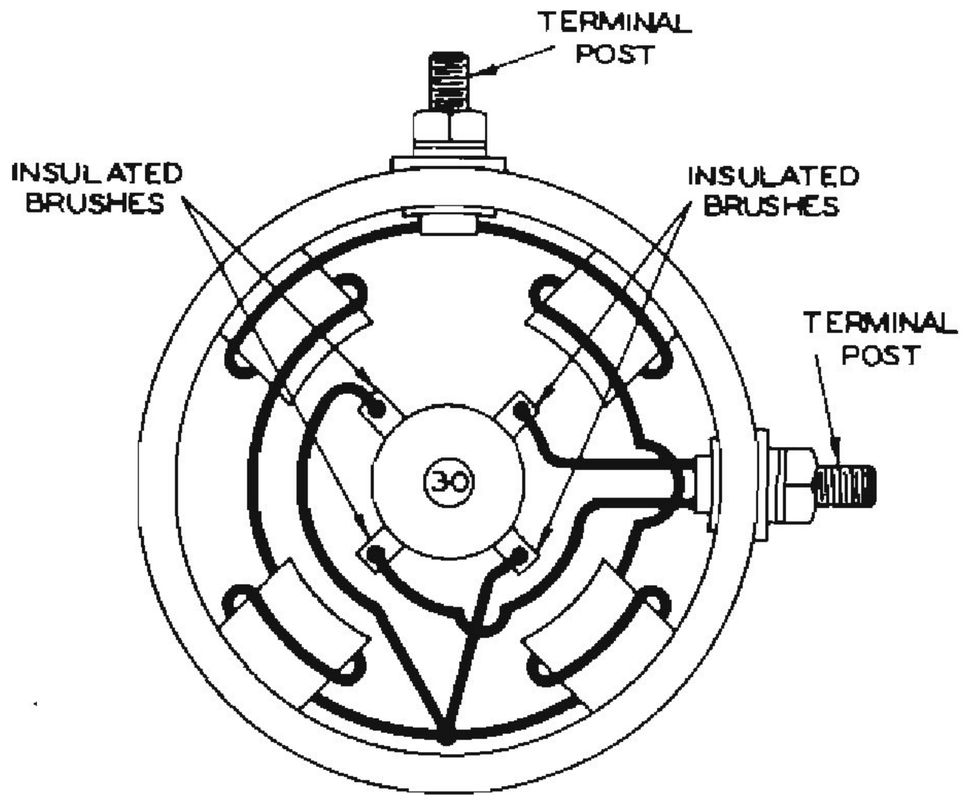

Figure 1

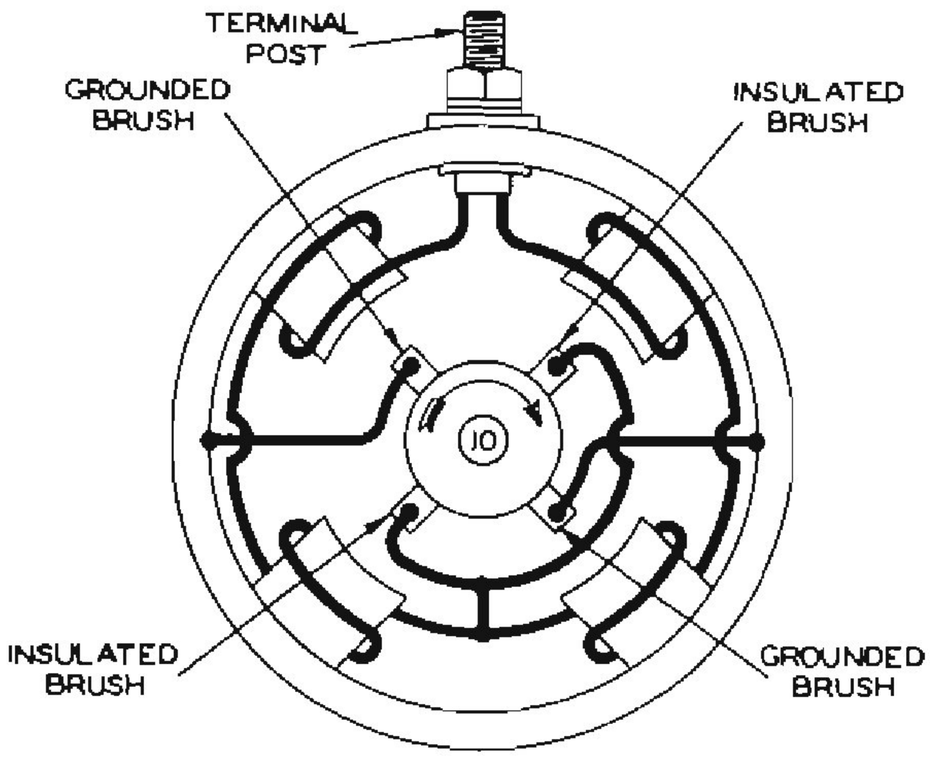

Figure 2