prestolite SERVICE MANUAL

WINDSHIELD WIPER MOTOR SECTION

(Issued 3-16-78)

VOLTS 12 POLES 2 BRUSHES 2

ROTATION Motor rotates counter-clockwise at the drive end. Output shaft oscillates. The output angle of oscillation can be varied.

LUBRICATION At overhaul, fill gear teeth and all holes and cover all surfaces of the left hand gear and sector gear with an approved, high temperature grease.

END PLAY .003" to .010". Adjust by turning screw at drive end of motor. Replace screw if nylon lock becomes worn so that screw will not hold setting.

FIELD COIL DRAW (70°F) 1.0 to 1.1 amperes at 10.0 volts.

NO LOAD TEST (70°F) 12.0 volts, 1.9 amperes, 57 Cycles per minute (output shaft)

OUTPUT ANGLE Adjustable by installing link pin in the different holes of the sector gear. Output angle can be adjusted to 75°, 85°, 100°, 115°, or 135° depending on which hole is used.

PARKING POSITION Output shaft can park clockwise or counter-clockwise by installing link pin in one of the holes of left hand gear. Link should park perpendicular to output shaft centerline.

UNIT	CAPACITOR CAPACITY
RS-4001	.02 MFD ±.002
RS-4002	None used

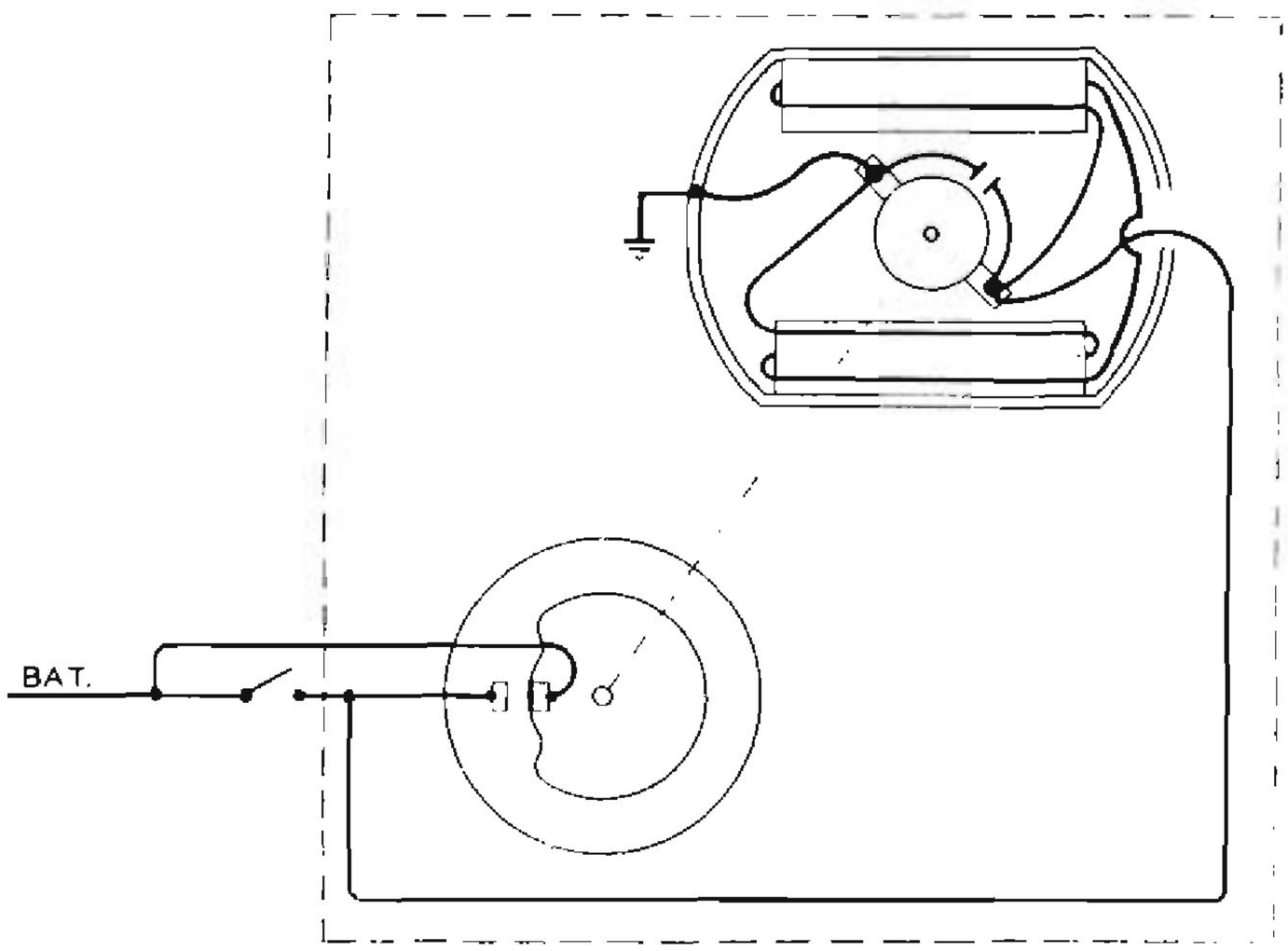

Printed in U.S.A.