UNIVERSAL GENERATOR TEST SPECIFICATIONS

Generator Sales Number	See Specification Number
P45-721	S-1
P45-722	S-1
P45-723	S-1
P45-724	S-1
P45-725	S-1
P45-726	S-2
P45-727	S-2
P45-761	S-3
P45-762	S-3
P45-763	S-4
P45-764	S-3
P45-765	S-5

Printed in U.S.A.

VOLTS 12 — VENTILATED Yes — ROTATION CWDE

POLES 2 — BRUSHES 2 — CONTROL Vibrating Current Voltage Regulator

BRUSH SPRING TENSION

18 to 36 ounces with new brushes. Tension is measured by using an adaptor and hooking it under the brush arm as near to the brush as possible. Take reading just as the arm leaves the brush.

LUBRICATION

Add oil to oiler at regular chassis lubrication, or every 5,000 miles.

GROUND POLARITY

Negative

FIELD COIL DRAW

(70°F) 1.2 to 1.3 amperes at 10.0 volts.

MOTORING DRAW

(70°F) 3.4 to 3.9 amperes at 10.0 volts.
NOTE: For figure 1, have field terminal grounded to frame. For figure 2, have field terminal connected to armature terminal.

OUTPUT TEST

15.0 volts, 25.0 amperes, 2100-2200 RPM
15.0 volts, 30.0 amperes, 2250-2375 RPM
15.0 volts, 35.0 amperes, 2250-2650 RPM

Do not operate at high output for any length of time without the ventilating fan. To do so may result in burned armature and fields.

Unit	Rated Output	Internal Wiring
P45-721	30 Amps	Fig. 1
P45-722	30-35 Amps	Fig. 2
P45-723	30-35 Amps	Fig. 2
P45-724	30 Amps	Fig. 1
P45-725	30 Amps	Fig. 1

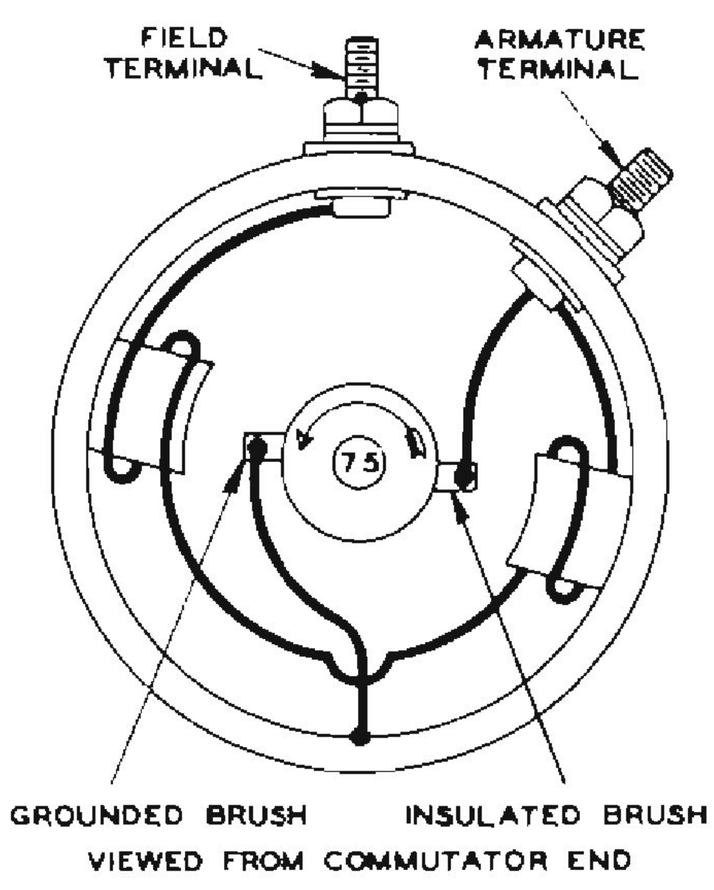

Figure 1.

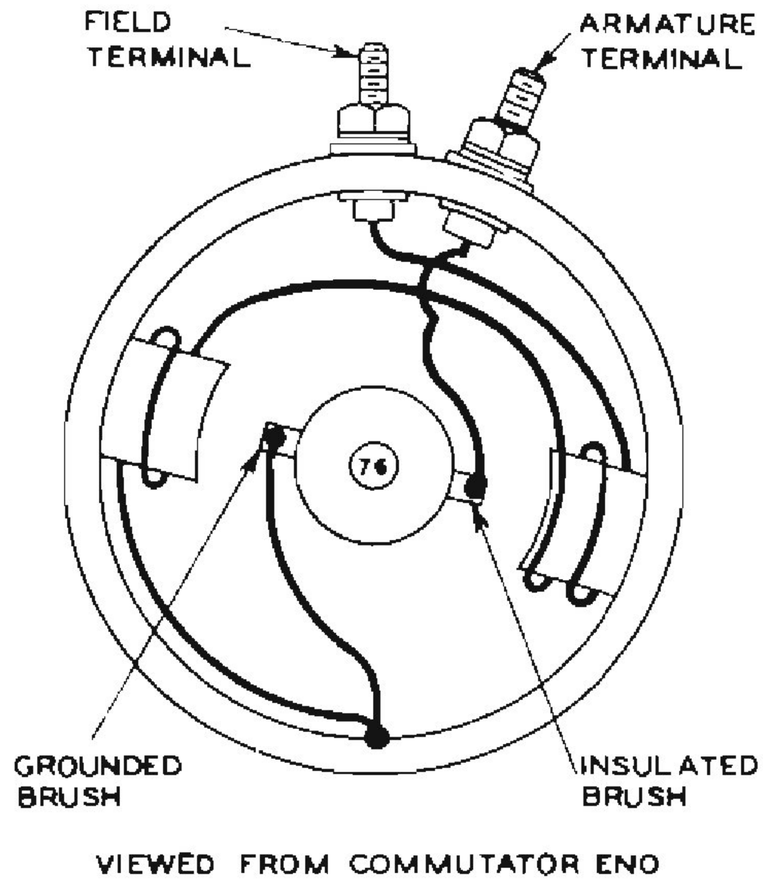

Figure 2.

Printed in U.S.A.

VOLTS 12 VENTILATED Yes ROTATION CWDE

POLES 2 BRUSHES 2 CONTROL Vibrating Current Voltage Regulator

BRUSH SPRING TENSION — 18 to 36 ounces with new brushes. Tension is measured by using an adaptor and hooking it under the brush arm as near to the brush as possible. Take reading just as the arm leaves the brush.

LUBRICATION — Add oil to oiler at regular chassis lubrication, or every 5,000 miles.

GROUND POLARITY — Negative

FIELD COIL DRAW — (70°F) 1.2 to 1.3 amperes at 10.0 volts.

MOTORING DRAW — (70°F) 2.9 maximum amperes at 10.0 volts.
NOTE: Have field terminal grounded to frame.

OUTPUT TEST — 15.0 volts, 25.0 amperes at 2800 minimum RPM (hot)

Do not operate at high output for any length of time without the ventilating fan. To do so may result in burned armature and fields.

Unit	Rated Output	Internal Wiring
P45-726	25-30 Amps.	Fig. 1
P45-727	25-30 Amps.	Fig. 1

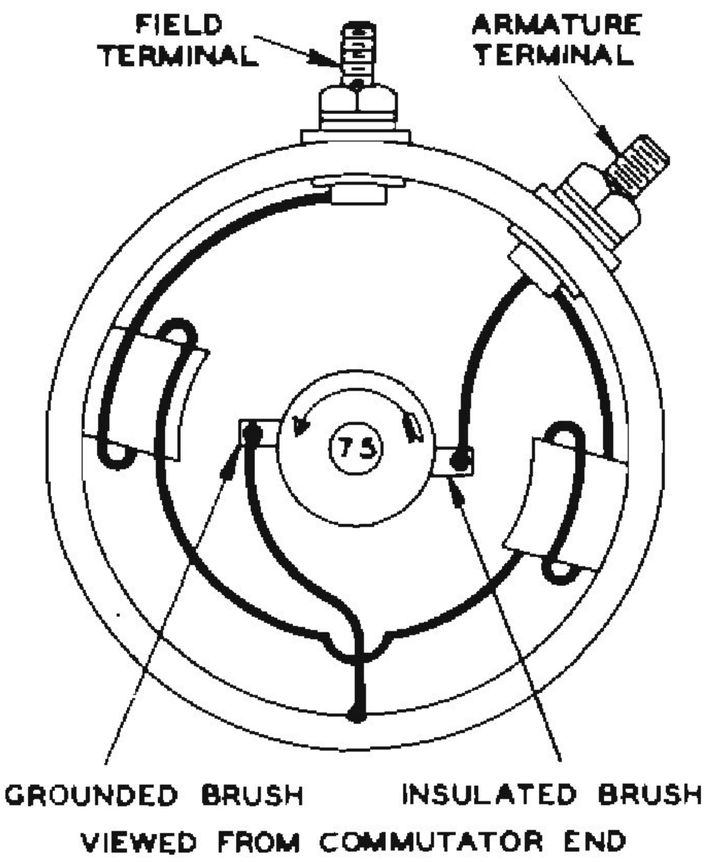

Figure 1.

VOLTS 6 — VENTILATED Yes — ROTATION CWDE

POLES 2 — BRUSHES 2 — CONTROL Vibrating Current Voltage Regulator

BRUSH SPRING TENSION — 35 to 53 ounces with new brushes. Tension is measured by using an adaptor and hooking it under the brush arm as near to the brush as possible. Take reading just as the arm leaves the brush.

LUBRICATION — Add oil to oiler at regular chassis lubrication, or every 5,000 miles.

GROUND POLARITY — See tabulation.

FIELD COIL DRAW (70°F) — 1.6 to 1.7 amperes at 5.0 volts.

MOTORING DRAW (70°F) — 5.0 to 5.5 amperes at 5.0 volts.
NOTE: For figure 1, have field terminal grounded to frame. For figure 2, have field terminal connected to armature terminal.

OUTPUT TEST — 8.0 volts, 40.0 amperes at 2250 minimum RPM (hot)
8.0 volts, 45.0 amperes at 2450 minimum RPM (hot)

Do not operate at high output for any length of time without ventilating fan. To do so may result in burned armature and fields.

Unit	Rated Output	Ground Polarity	Internal Wiring
P45-761	45 Amps.	Positive	Fig. 1
P45-762	40 Amps.	Positive	Fig. 2
P45-764	45 Amps.	Negative	Fig. 1

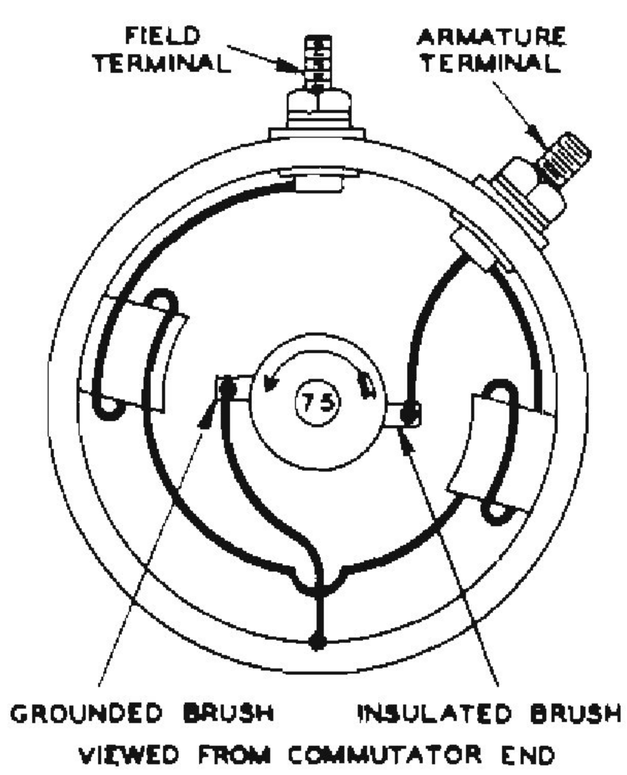

Figure 1.

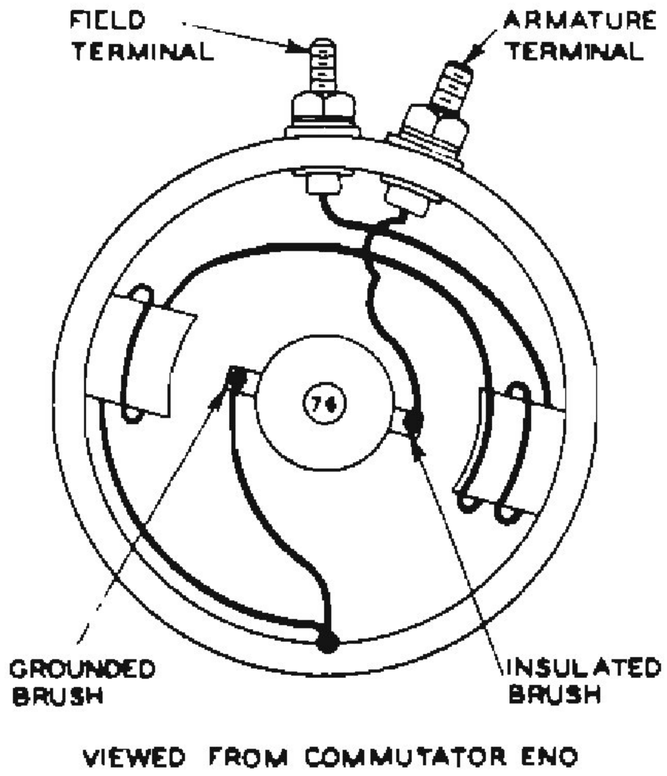

Figure 2.

Printed in U.S.A.

VOLTS 6 VENTILATED Yes ROTATION CWDE

POLES 2 BRUSHES 2 CONTROL Vibrating Current Voltage Regulator

BRUSH SPRING TENSION — 18 to 36 ounces with new brushes. Tension is measured by using an adaptor and hooking it under the brush arm as near to the brush as possible. Take reading just as the arm leaves the brush.

LUBRICATION — Add oil to oiler at regular chassis lubrication, or every 5,000 miles.

GROUND POLARITY — Positive

FIELD COIL DRAW (70°F) — 2.3 to 2.5 amperes at 5.0 volts.

MOTORING DRAW (70°F) — 4.4 maximum amperes at 5.0 volts. Have field terminal connected to armature terminal.

OUTPUT TEST — 8.0 volts, 40 maximum amps, 1900 RPM

Do not operate at high output for any length of time without the ventilating fan. To do so may result in burned armature and fields.

Unit	Rated Output	Internal Wiring
P45-763	40 Amps.	Fig. 1

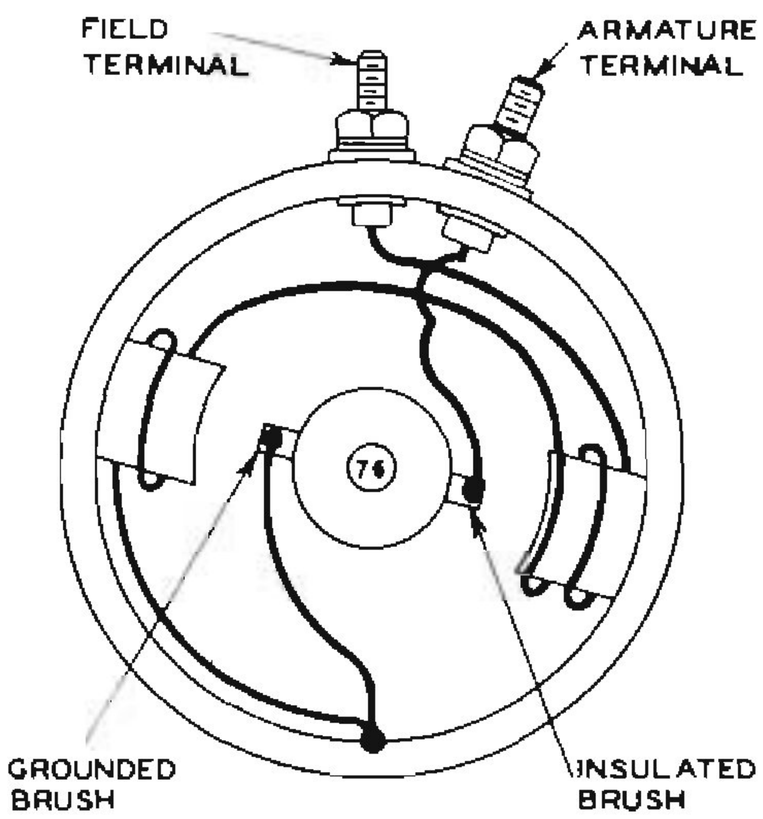

Figure 1.

VOLTS 6 — VENTILATED Yes — ROTATION CWDE

POLES 2 — BRUSHES 2 — CONTROL Vibrating Current Voltage Regulator

BRUSH SPRING TENSION — 18 to 36 ounces with new brushes. Tension is measured by using an adaptor and hooking it under the brush arm as near to the brush as possible. Take reading just as the arm leaves the brush.

LUBRICATION — Add oil to oiler at regular chassis lubrication or every 5,000 miles.

GROUND POLARITY — Negative

FIELD COIL DRAW (70°F) — 1.6 to 1.7 amperes at 5.0 volts.

MOTORING DRAW (70°F) — 5.4 maximum amperes at 5.0 volts. Have field terminal grounded to frame.

OUTPUT TEST — 8.0 volts, 45 amperes at 2900 RPM (hot)

Do not operate at high output for any length of time without ventilating fan. To do so may result in burned armature and fields.

Unit	Rated Output	Internal Wiring
P45-765	45 Amps	Figure 1

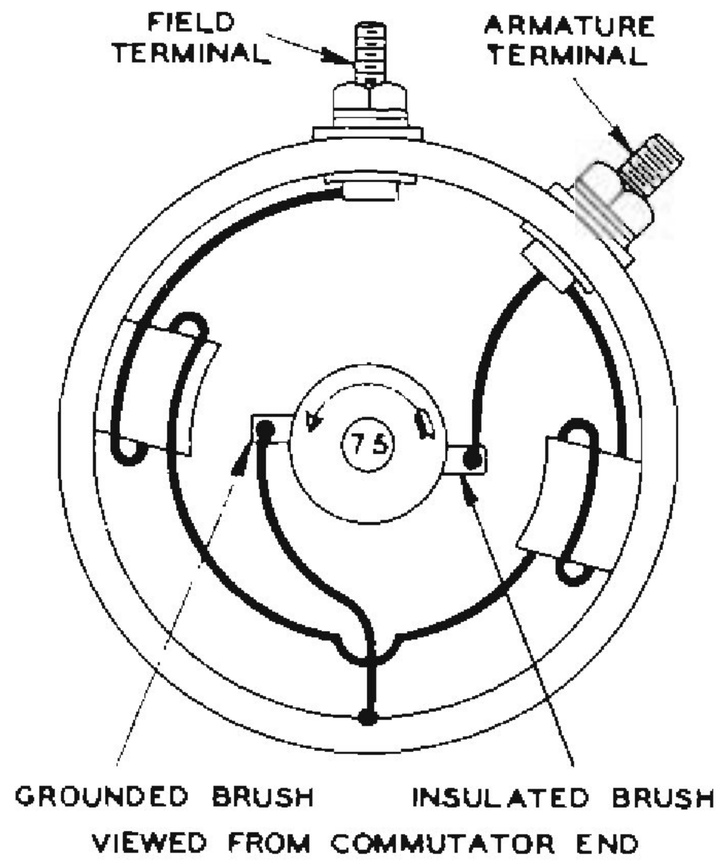

Figure 1