40 MT Delco Starter
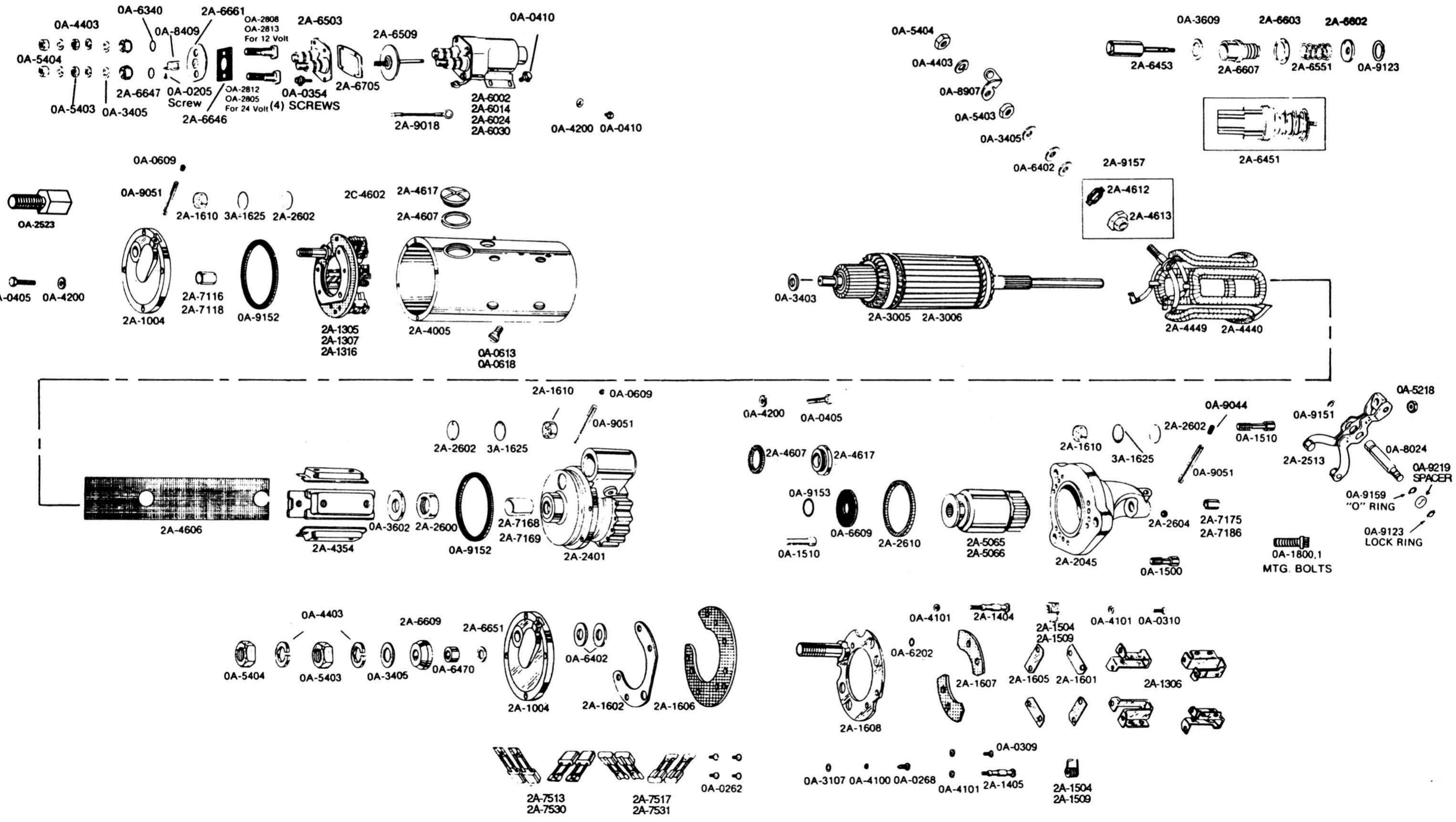
OEM 1113905, 1114098
Lester 3745, 3974